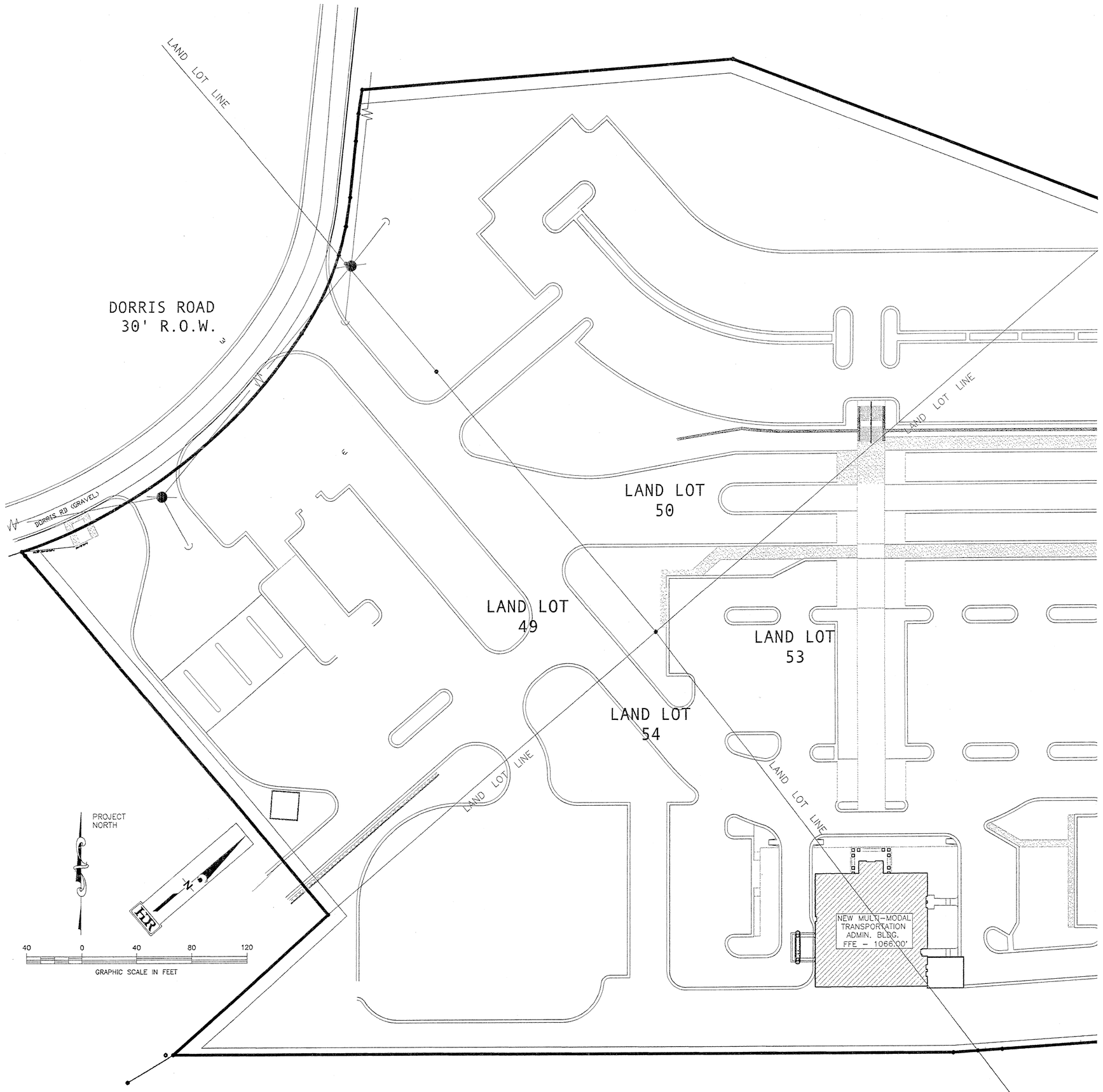

1 A1.1 ARCHITECTURAL SITE PLAN
SCALE: 1"=40'

NOTE: SITE DESIGN PER CIVIL ENGINEERING DRAWINGS. SEE CIVIL DRAWINGS FOR BUILDING LOCATION.

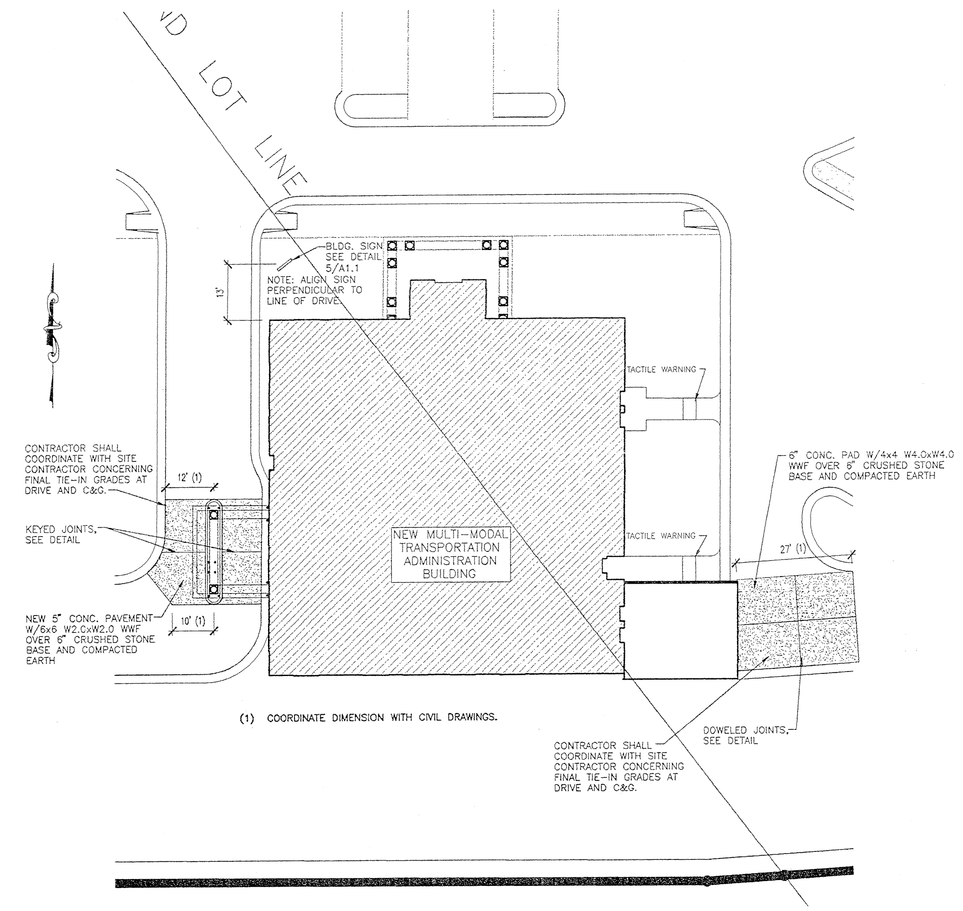

(1) COORDINATE DIMENSION WITH CIVIL DRAWINGS.

2 A1.1 LARGE SCALE ARCHITECTURAL SITE PLAN
SCALE: 1"=20'

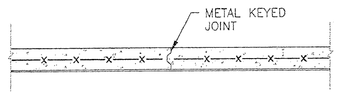

3 A1.1 KEYED JOINT DETAIL (KJ)
SCALE: 3/4"=1'-0"

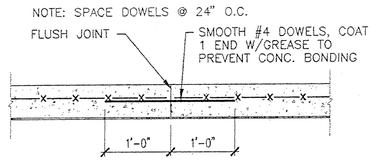

NOTE: WHEN INSTALLING DOWELS, GREASED END OF ALL DOWELS MUST OCCUR ON SAME SIDE OF JOINT.

4 A1.1 DOWELED JOINT DETAIL (DJ)
SCALE: 3/4"=1'-0"

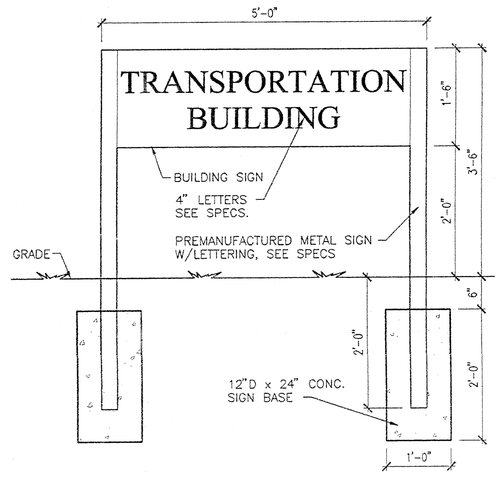

5 A1.1 BUILDING SIGN DETAIL
SCALE: 3/4"=1'-0"

Stantec Architecture Inc.
4875 Riverside Drive
Macon, Georgia U.S.A.
31210-1117
Tel. 478.474.6100
Fax. 478.476.8373
www.stantec.com

Stantec

Copyright Reserved
The Contractor shall verify and be responsible for all dimensions. DO NOT scale the drawing — any errors or omissions shall be reported to Stantec Architecture Inc. without delay.
The Copyrights to all designs and drawings are the property of Stantec Architecture Inc. Reproduction or use for any purpose other than that authorized by Stantec Architecture Inc. is forbidden.

Consultants

Legend

Notes

Revision	By	Appd.	Date

Issued	By	Appd.	Date
		NJR	05/03/01

File Name: m04a1-1.dwg	Dwn.	Chkd.	Dsgn.	Date

Permit-Seal

STATE OF GEORGIA
DAVID L. RICHARDSON
CERTIFICATE No.
REGISTERED ARCHITECT

Client/Project
MULTI-MODAL TRANSPORTATION ADMINISTRATION BUILDING
DOUGLAS COUNTY, GEORGIA
DOUGLASVILLE, GEORGIA U.S.A.

Title
ARCHITECTURAL SITE PLAN

Project No. DCO001.000
Scale
Drawing No. A1.1
Sheet 27 of
Revision 0

ORIGINAL SHEET - ARCH (30x42) S:\Arch\drawings\m04a1-1.dwg / A0
plot date: 10/02/2001 by: mrcoat

BUILDING DATA:

BUILDING CLASSIFICATION, CONSTRUCTION TYPE AND FIRE RESISTANT DESIGNS BASED ON:
1994 STANDARD BUILDING CODE
1997 N.F.P.A. 101 LIFE SAFETY CODE

HANDICAP CODE – GEORGIA ACCESSIBILITY CODE

1. OCCUPANCY / USE GROUP: COMMERCIAL – BUSINESS
2. CONSTRUCTION TYPE: TYPE V UNPROTECTED UNSPRINKLERED (SBC), TYPE III (200) (NFPA)

GENERAL NOTES:

1. ALL DIMENSIONS ARE FACE OF MASONRY, TO FACE OF STUD AND TO CENTERLINE OF COLUMNS UNLESS OTHERWISE NOTED.
2. ALL INTERIOR WALLS SHALL BE 20 GA 3 5/8 METAL STUDS AT 24" O.C. UNLESS OTHERWISE NOTED

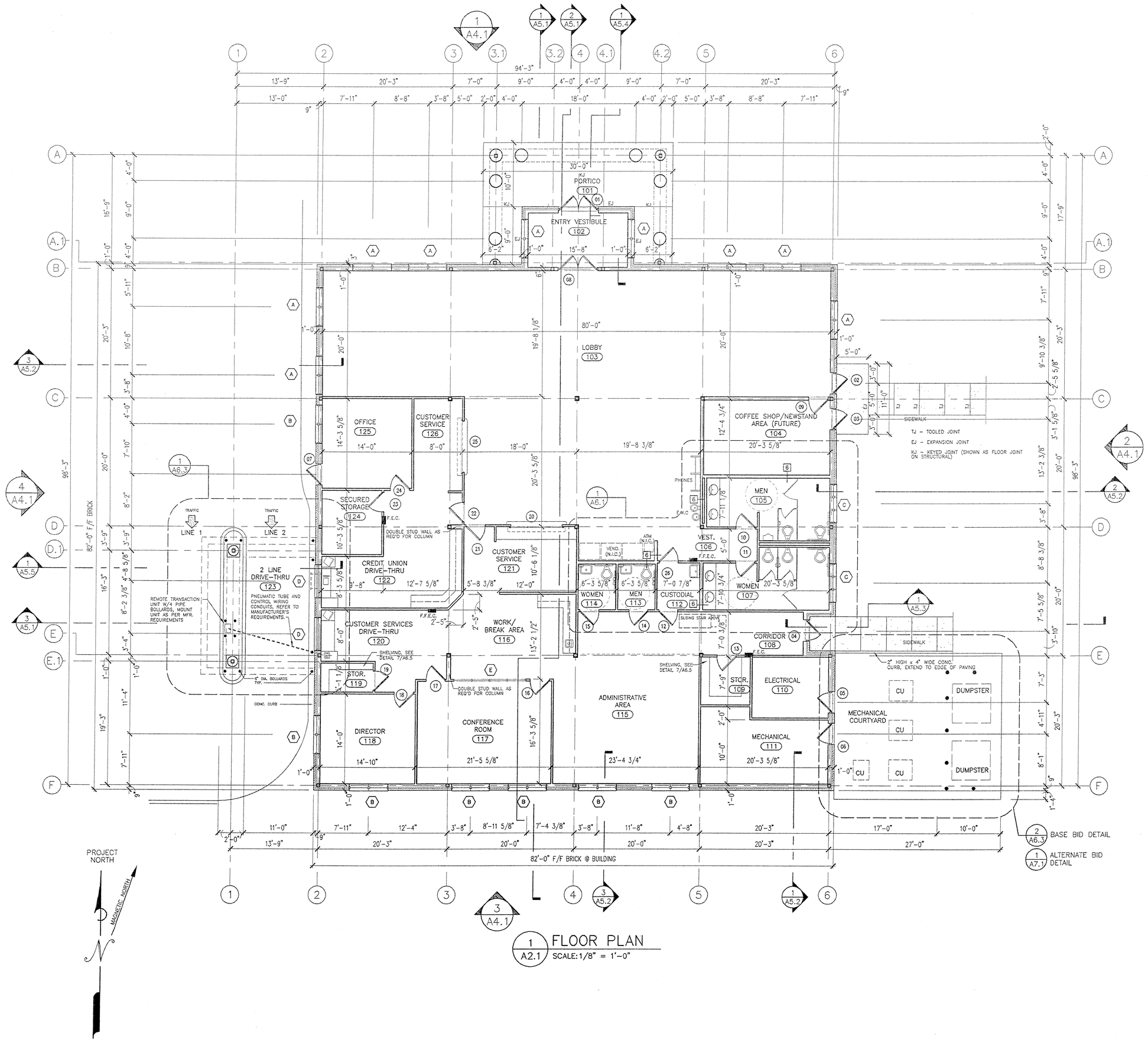

1 A2.1 FLOOR PLAN
SCALE: 1/8" = 1'-0"

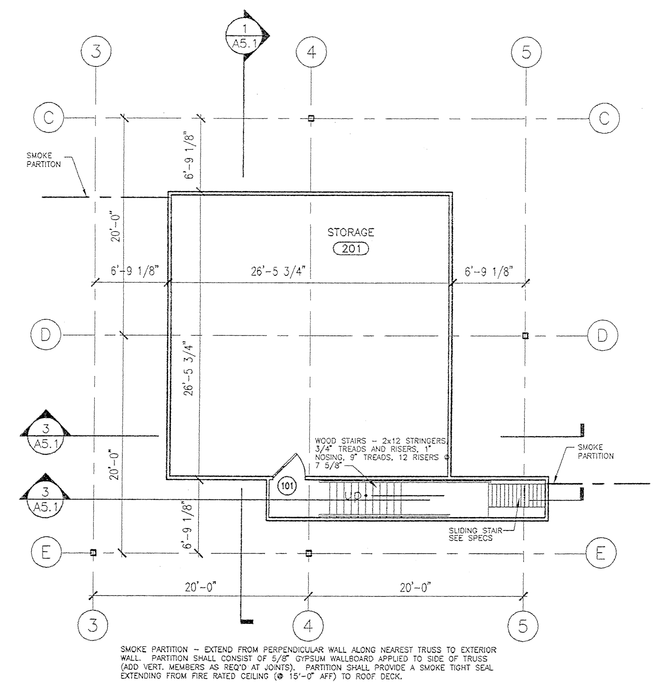

2 A2.1 ATTIC FLOOR PLAN
SCALE: 1/8" = 1'-0"

SYMBOL LIST:

6	METAL STUD WALL WITH 5/8" GYPSUM BOARD; CALLOUT IN BOX DENOTES NOMINAL THICKNESS OF METAL STUD
	WALLS ABOVE WITH SOUND ATTENUATION BATTS WHERE INDICATED AND NOTED
ROOM NAME	ROOM NAME
000	ROOM REFERENCE NUMBER
N.I.C.	NOT IN CONTRACT
01	DOOR REFERENCE NUMBER SEE SHEET A3.1 FOR DOOR SCHEDULE
A	WINDOW REFERENCE LETTER SEE SHEET A3.1 FOR WINDOW SCHEDULE
F.E.C.	RECESSED FIRE EXTINGUISHER CABINET
F.F.E.C.	RECESSED FIRE-RATED FIRE EXTINGUISHER CABINET
F.E.	WALL MOUNTED FIRE EXTINGUISHER

Stantec Architecture Inc.
4875 Riverside Drive
Macon, Georgia U.S.A.
31210-1117
Tel. 478.474.6100
Fax. 478.476.8373
www.stantec.com

Stantec

Copyright Reserved

The Contractor shall verify and be responsible for all dimensions. DO NOT scale the drawing – any errors or omissions shall be reported to Stantec Architecture Inc. without delay.
The Copyrights to all designs and drawings are the property of Stantec Architecture Inc. Reproduction or use for any purpose other than that authorized by Stantec Architecture Inc. is forbidden.

Consultants

Legend

Notes

Revision	By	Appd.	Date

Issued	By	Appd.	Date
		DFC	05/03/01

File Name: m04a2-1.dwg

Dwn.	Chkd.	Dsgn.	Date

Permit-Seal

STATE OF GEORGIA
DAVID L. RICHARDSON
CERTIFICATE No. 1408
REGISTERED ARCHITECT

Client/Project
MULTI-MODAL TRANSPORTATION ADMINISTRATION BUILDING

DOUGLAS COUNTY, GEORGIA

DOUGLASVILLE, GEORGIA U.S.A.

Title
FLOOR PLANS

Project No. DCO001.000
Scale

Drawing No. A2.1
Sheet 28 of
Revision 0

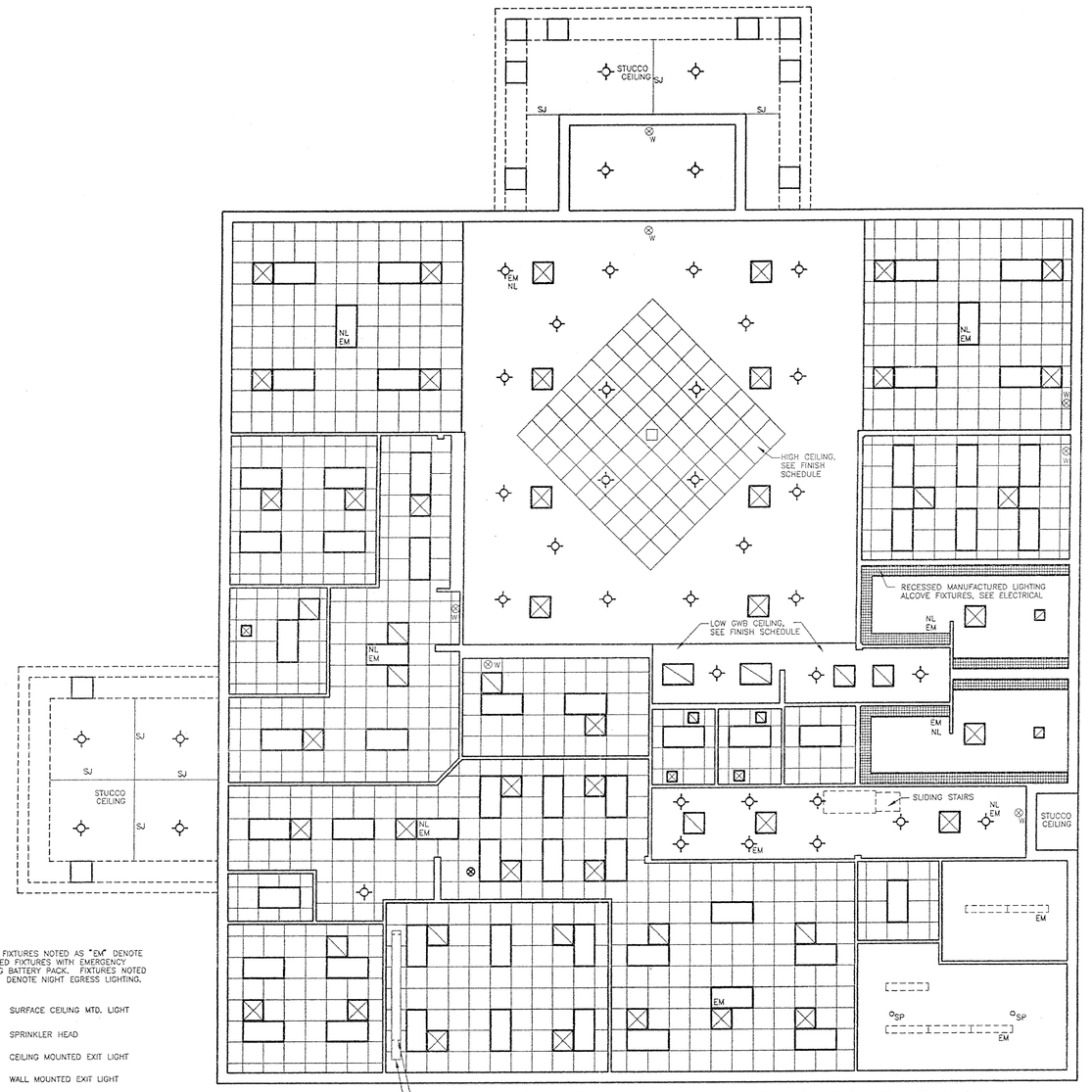

NOTE: FIXTURES NOTED AS "EM" DENOTE RECESSED FIXTURES WITH EMERGENCY LIGHTING BATTERY PACK. FIXTURES NOTED AS "NL" DENOTE NIGHT EGRESS LIGHTING.

- SURFACE CEILING MTD. LIGHT
- SP SPRINKLER HEAD
- CEILING MOUNTED EXIT LIGHT
- W WALL MOUNTED EXIT LIGHT
- 2x4 LAY-IN LIGHTING TROFFER
- 2x2 LAY-IN CEILING DIFFUSER (WHERE SHOWN IN GRID)
- 2x2 LAY-IN CEILING RETURN AIR GRILLE (WHERE SHOWN IN GRID)
- CEILING DIFFUSER
- RETURN AIR GRILLE
- SJ – STUCCO JOINT

NOTE: UNLESS SHOWN OTHERWISE, ALL CEILINGS WITHOUT GRIDS ARE GYPSUM BOARD W/SUSPENSION SYSTEMS AS REQUIRED.

1 / A2.2 FLOOR PLAN – REFLECTED CEILING
SCALE: 1/8" = 1'-0"

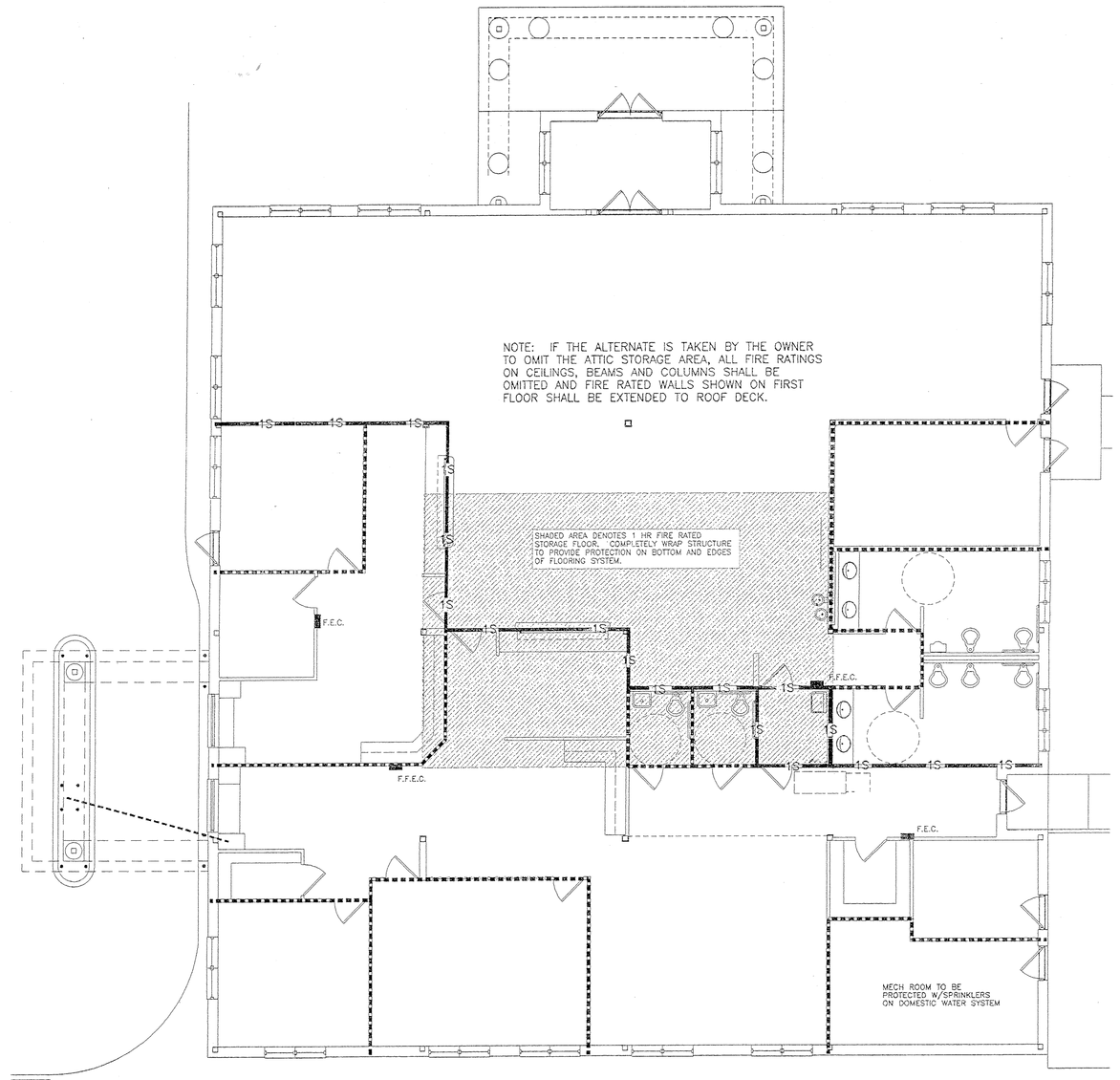

- 1S FIRE RATED WALL. NUMBER (IE. "1") DENOTES HOURLY RATING OF WALL. DESIGNATION OF "S" DENOTES SOUND RATED WALL. SEE RATINGS LIST THIS SHEET FOR UL DESIGNS AND OTHER NOTES.
- SOUND RATED WALL (WALL W/FIBERGLASS SOUND BATT INSULATION, SAME THICKNESS AS WALL)
- F.E.C. RECESSED FIRE EXTINGUISHER CABINET
- F.F.E.C. RECESSED FIRE-RATED FIRE EXTINGUISHER CABINET
- F.E. WALL MOUNTED FIRE EXTINGUISHER

NOTES:

1. PROVIDE 1 HR FIRE RATED FLOOR/CEILING ASSEMBLY AT STORAGE AREA TRUSSES.
2. ALL PENETRATIONS THRU FIRE RATED WALLS SHALL BE TREATED AS REQUIRED TO MAINTAIN FIRE RATING OF WALL IN ACCORDANCE WITH UL STANDARD PENETRATION ASSEMBLIES.

2 / A2.2 FLOOR PLAN – ARCHITECTURAL FIRE PROTECTION AND SOUND INSULATION PLAN
SCALE: 1/8" = 1'-0"

NOTE: ALL ROOF SURFACES SHOWN SHALL BE ARCHITECTURAL STANDING SEAM METAL ROOFING.

- VTR VENT THRU ROOF
- FLUE GAS FIRED EQUIPMENT VENT

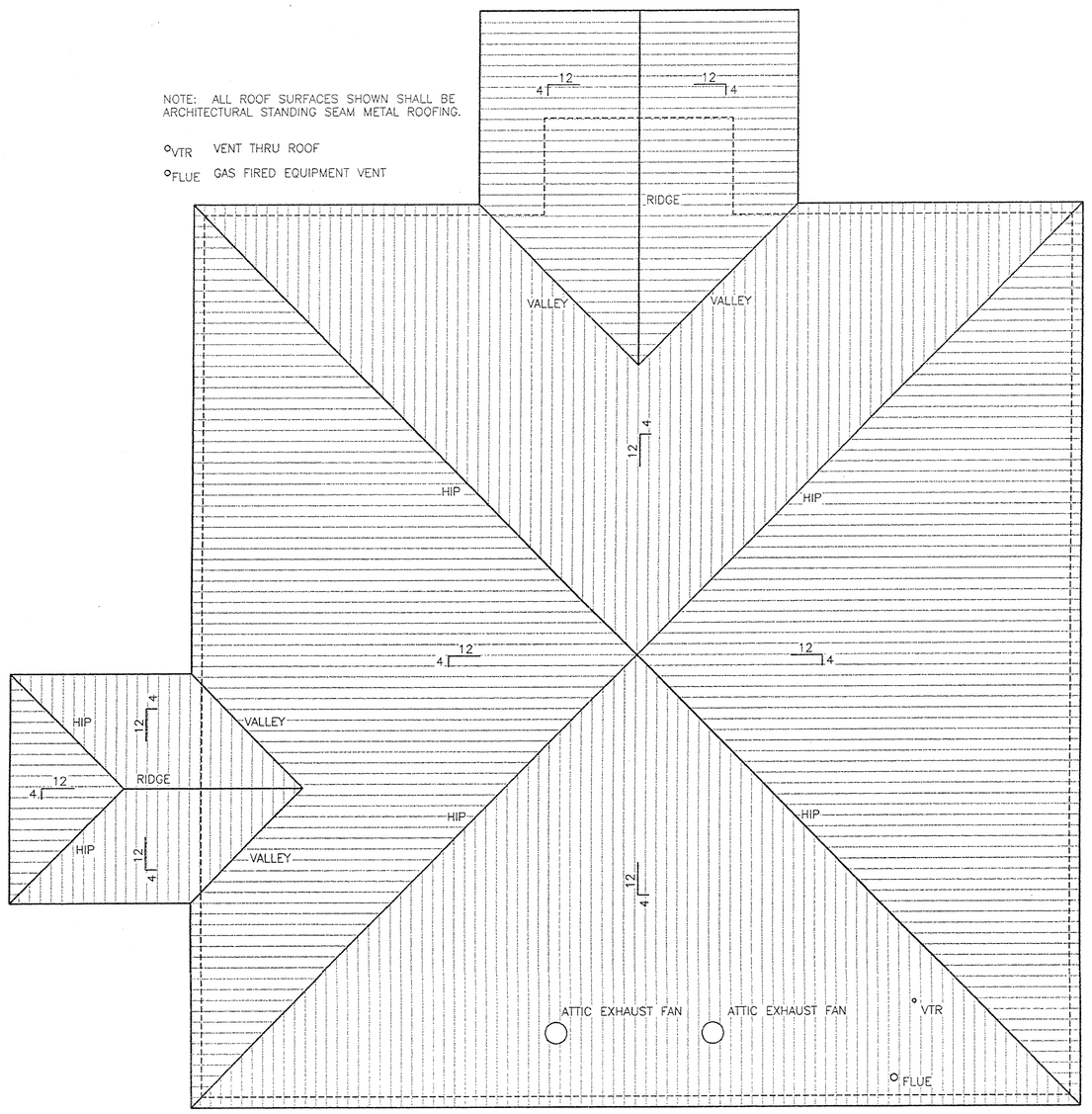

3 / A2.2 ROOF PLAN
SCALE: 1/8" = 1'-0"

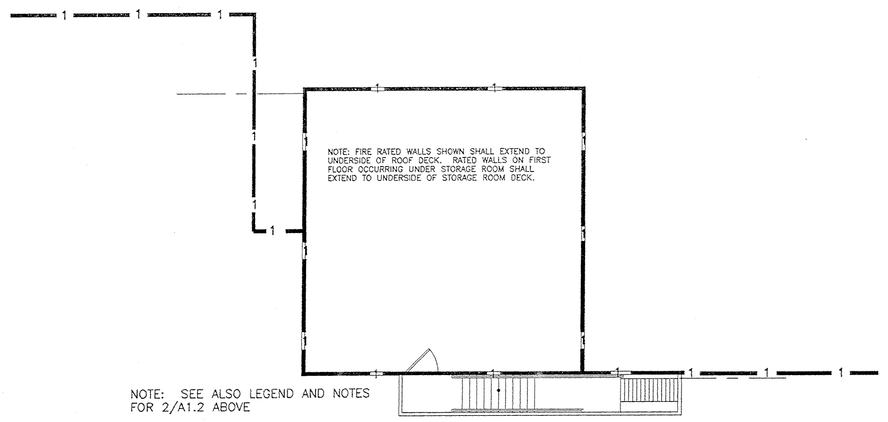

NOTE: SEE ALSO LEGEND AND NOTES FOR 2/A1.2 ABOVE

4 / A2.2 ATTIC FLOOR PLAN – ARCHITECTURAL FIRE PROTECTION PLAN
SCALE: 1/8" = 1'-0"

WALL, CEILING & ROOF UL DATA

1 HR. RATED ASSEMBLIES

1. METAL STUD/GWB WALLS – UL DESIGN U465
2. STEEL BEAMS/SPRAYED – SPRAY APPLIED, THICKNESS AS REQ'D FOR RATING REQUIRED AND SIZE OF BEAM USED (THICKNESS TO BE PROVIDED BY MANUFACTURER). SEE STRUCT. DRAWINGS FOR BEAM SIZES. BEAMS SHALL INCLUDE THOSE FROM COLUMNS C3–C6, D3–D5, E3–E5, C3–E3, C4–E4 AND C5–E5 INCLUSIVE. RATED COLUMNS SHALL INCLUDE THE 9 COLUMNS SUPPORTING BEAMS LISTED ABOVE. PROVIDE STRUCTURAL INTUMESCENT COATING ON TOP FLANGE AS REQUIRED FOR TRUSS BEARING. (NOTE: ENTIRE BEAM MAY UTILIZE INTUMESCENT COATING IF REQUIRED TO ACHIEVE FIRE RATING)
3. STEEL COLUMNS/GWB – UL DESIGN X526. COL. SHALL INCLUDE C2–C6, D3–D5 AND E3–E6. INSTALL OUTER LAYER OF GWB OVER STEEL COVER AS ALLOWED BY UL.
4. FLOOR/CEILING UNDER STORAGE ROOM – UL DESIGN L544.

PROVIDE FIRE RATED GYP. BOARD IN LAYERS AS REQ'D FOR FIRE RATING SPECIFIED.

Stantec Architecture Inc.
4875 Riverside Drive
Macon, Georgia U.S.A.
31210–1117
Tel. 478.474.6100
Fax. 478.476.8373
www.stantec.com

Stantec

Copyright Reserved

The Contractor shall verify and be responsible for all dimensions. DO NOT scale the drawing – any errors or omissions shall be reported to Stantec Architecture Inc. without delay.
The Copyrights to all designs and drawings are the property of Stantec Architecture Inc. Reproduction or use for any purpose other than that authorized by Stantec Architecture Inc. is forbidden.

Consultants

Legend

Notes

Revision	By	Appd.	Date

Issued	By	Appd.	Date
	DLR		05/03/01

File Name: m04a2-2.dwg

Dwn.	Chkd.	Dsgn.	Date

Permit-Seal

STATE OF GEORGIA
DAVID L. RICHARDSON
No. 14000
REGISTERED ARCHITECT

Client/Project

MULTI-MODAL TRANSPORTATION ADMINISTRATION BUILDING

DOUGLAS COUNTY, GEORGIA

DOUGLASVILLE, GEORGIA U.S.A.

Title

REFL. CEILING & ARCH. FIRE PROT.

Project No. DC0001.000

Scale

Drawing No. A2.2

Sheet 29 of

Revision 0

ORIGINAL SHEET – ARCH (24x36") g:\arch\drawings\04a02-2.dwg, FIR
plot date/by/plotter: 4/30/2001 by: mwood

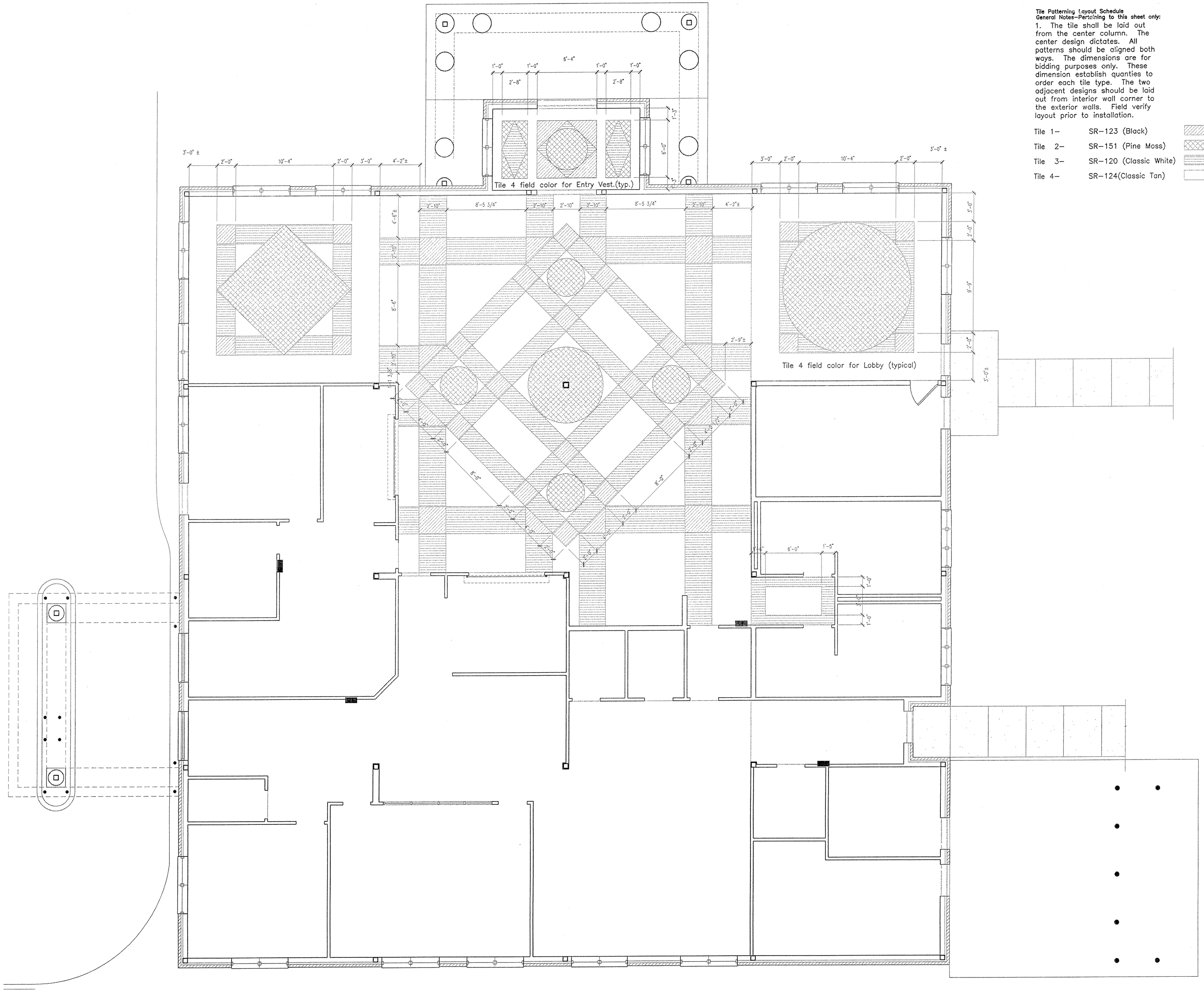

Tile Patterning Layout Schedule
General Notes-Pertaining to this sheet only:

1. The tile shall be laid out from the center column. The center design dictates. All patterns should be aligned both ways. The dimensions are for bidding purposes only. These dimension establish quanties to order each tile type. The two adjacent designs should be laid out from interior wall corner to the exterior walls. Field verify layout prior to installation.

Tile 1–	SR–123 (Black)	
Tile 2–	SR–151 (Pine Moss)	
Tile 3–	SR–120 (Classic White)	
Tile 4–	SR–124(Classic Tan)	

1 / A2.3 FLOOR PLAN – FLOORING TYPE LAYOUT
SCALE: 1/4" = 1'-0"

Stantec Architecture Inc.
4875 Riverside Drive
Macon, Georgia U.S.A.
31210–1117
Tel. 478.474.6100
Fax. 478.476.8373
www.stantec.com

Stantec

Copyright Reserved

The Contractor shall verify and be responsible for all dimensions. DO NOT scale the drawing – any errors or omissions shall be reported to Stantec Architecture Inc. without delay.
The Copyrights to all designs and drawings are the property of Stantec Architecture Inc. Reproduction or use for any purpose other than that authorized by Stantec Architecture Inc. is forbidden.

Consultants

Legend

Notes

Revision	By	Appd.	Date

Issued	By	Appd.	Date
	DLR		05/03/01

File Name: m04a2-3.dwg

Dwn.	Chkd.	Dsgn.	Date

Permit-Seal

STATE OF GEORGIA
DAVID L. RICHARDSON
CERTIFICATE NO. 16[illegible]
REGISTERED ARCHITECT

Client/Project

MULTI-MODAL TRANSPORTATION ADMINISTRATION BUILDING

DOUGLAS COUNTY, GEORGIA

DOUGLASVILLE, GEORGIA U.S.A.

Title

FLOOR PLAN - FLOORING TYPE LAYOUT

Project No.	Scale	
DCO001.000		
Drawing No.	Sheet 30	Revision
A2.3	of	0

Plotted By: DAVID RICHARDSON
Date: Tue, Aug 28, 2001 9:41:04 AM
File: C:\Temp\AcPublish_1264\m04a2-3.dwg
Layout: A2.3 HIGH - SHEET - 24"x36"

FINISH SCHEDULE

ROOM NO.	ROOM NAMES	FLOOR (SEE FLOORING PLAN) MAT'L	FLOOR FINISH	BASE MAT'L	BASE FINISH	WAINSCOT MAT'L	WAINSCOT FINISH	WALLS MAT'L	WALLS FINISH	CEILING (SEE REFL. CLG. PLAN) MAT'L	CEILING FINISH	CEILING HEIGHT	NOTES
101	PORTICO	CONCRETE	TROWEL/SEAL	STUCCO	PAINT	SAME AS WALL	–	BRICK	–	DEFS	–	15'-0"	–
102	ENTRY VESTIBULE	RESILIENT	–	WOOD	STAIN	CHAIR RAIL/VWC	STAIN CR	GWB	PAINT	TYPE1 ACT	–	11'-8"	–
103	LOBBY	RESILIENT	–	WOOD	STAIN	CHAIR RAIL/VWC	STAIN CR	GWB	PAINT	TYPE 1 ACT/GWB	TEXT. GWB	•11'-8"	• 11'-8" @ GWB, 13'-8" @ LAY-IN
104	COFFEE SHOP/NEWSTAND	QUARRY TILE	–	QUARRY TILE	–	SAME AS WALL	–	GWB	PAINT	TYPE 2 ACT	–	11'-8"	–
105	MEN'S RESTROOM	CER. MOSAIC TILE	–	CT	–	CT	–	GWB	PAINT	GWB	TEXT. GWB	11'-8"	–
106	VESTIBULE	RESILIENT	–	WOOD	PAINT	CHAIR RAIL/VWC	STAIN CR	GWB	PAINT	GWB	TEXT. GWB	11'-8"	–
107	WOMEN'S RESTROOM	CER. MOSAIC TILE	–	CT	–	CT	–	GWB	PAINT	GWB	TEXT. GWB	11'-8"	–
108	CORRIDOR	CARPET	–	RESILIENT	–	SAME AS WALL	–	GWB	PAINT	GWB	TEXT GWB	9'-0"	–
109	STORAGE	RESILIENT	–	RESILIENT	–	SAME AS WALL	–	GWB	PAINT	TYPE 2 ACT	–	8'-8"	SHELVING
110	ELECTRICAL	CONCRETE	TROWEL/SEAL	RESILIENT	–	SAME AS WALL	–	GWB	PAINT	GWB	PAINT	15'-0"	–
111	MECHANICAL	CONCRETE	TROWEL/SEAL	RESILIENT	–	SAME AS WALL	–	GWB	PAINT	GWB	PAINT	15'-0"	–
112	CUSTODIAL	QUARRY TILE	–	CT	–	SAME AS WALL	–	GWB	WB ACRYLIC	TYPE 2 ACT	–	8'-8"	–
113	MEN'S TL.	CER. MOSAIC TILE	–	CT	–	SAME AS WALL	–	GWB	PAINT	TYPE 2 ACT	–	8'-8"	–
114	WOMEN'S TL.	CER. MOSAIC TILE	–	CT	–	SAME AS WALL	–	GWB	PAINT	TYPE 2 ACT	–	8'-8"	–
115	ADMINISTRATIVE AREA	CARPET	–	RESILIENT	–	SAME AS WALL	–	GWB	PAINT	TYPE 2 ACT/GWB	• TEXT. GWB	•11'-8"	• LAY-IN/GWB – 9'-0"/11'-8"
116	WORK/BREAK AREA	CARPET	–	RESILIENT	–	SAME AS WALL	–	GWB	PAINT	TYPE 2 ACT	–	11'-8"	–
117	CONFERENCE ROOM	CARPET	–	RESILIENT	–	CHAIR RAIL/VWC	STAIN CR	GWB	PAINT	TYPE 1 ACT	–	11'-8"	–
118	DIRECTOR	CARPET	–	RESILIENT	–	CHAIR RAIL/VWC	STAIN CR	GWB	PAINT	TYPE 1 ACT	–	11'-8"	–
119	STORAGE	RESILIENT	–	RESILIENT	–	SAME AS WALL	–	GWB	PAINT	TYPE 2 ACT	–	8'-8"	SHELVING
120	CUSTOMER SERVICES DRIVE-THRU	CARPET	–	RESILIENT	–	SAME AS WALL	–	GWB	PAINT	TYPE 2 ACT	–	11'-8"	–
121	CUSTOMER SERVICES	CARPET	–	RESILIENT	–	SAME AS WALL	–	GWB	PAINT	TYPE 2 ACT	–	11'-8"	–
122	CREDIT UNION DRIVE THRU	CARPET	–	RESILIENT	–	SAME AS WALL	–	GWB	PAINT	TYPE 2 ACT	–	11'-8"	–
123	2 LANE DRIVE THRU	CONCRETE	BROOM/SEAL	STUCCO	PAINT	STUCCO	PAINT	BRICK	BRICK	DEFS	–	15'-0"	–
124	SECURED STORAGE	RESILIENT	–	RESILIENT	–	SAME AS WALL	–	GWB	PAINT	TYPE 2 ACT	–	8'-8"	–
125	OFFICE	CARPET	–	RESILIENT	–	SAME AS WALL	–	GWB	PAINT	TYPE 2 ACT	–	11'-8"	–
126	CREDIT UNION CUSTOMER SERVICES	CARPET	–	RESILIENT	–	SAME AS WALL	–	GWB	PAINT	TYPE 2 ACT	–	11'-8"	–
201	STORAGE	EXP. PLYWOOD	–	RESILIENT	–	SAME AS WALL	–	GWB	TAPE/FINISH	GWB	PAINT	PAINT	PAINT

DOOR AND FRAME SCHEDULES

NO.	SIZE WIDTH	SIZE HEIGHT	SIZE THICK	DOOR ELEV.	DOOR MAT'L.	DOOR FINISH	DOOR LABEL	FRAME ELEV.	FRAME MAT'L	FRAME FINISH	DETAILS (H,J,S)(3)	LABEL	NOTES
01	6'-0"	7'-0"	1 3/4	A	ALUM	FACTORY	–	1	ALUM	FACTORY	1/A3.2	–	W/METAL GRILLAGE, SEE DETAIL 4/A3.1
02	3'-0"	7'-0"	1 3/4	B	HM	PAINT	–	2	HM	PAINT	2/A3.2	–	–
03	3'-0"	7'-0"	1 3/4	B	HM	PAINT	–	2	HM	PAINT	2/A3.2	–	–
04	3'-0"	7'-0"	1 3/4	B	HM	PAINT	–	2	HM	PAINT	2/A3.2	–	–
05	3'-0"	7'-0"	1 3/4	C	HM	PAINT	–	2	HM	PAINT	2/A3.2	–	–
06	3'-0"	7'-0"	1 3/4	C	HM	PAINT	–	2	HM	PAINT	2/A3.2	–	–
07	3'-0"	7'-0"	1 3/4	B	HM	PAINT	–	2	HM	ANOD	2/A3.2	–	–
08	6'-0"	7'-0"	1 3/4	A	ALUM	FACTORY	–	1	ALUM	FACTORY	8/A3.2	–	W/METAL GRILLAGE, SEE DETAIL 4/A3.1
09	3'-0"	7'-0"	1 3/4	C	WOOD	STAIN	–	3	HM	PAINT	7/A3.2	–	(1) (2)
10	3'-0"	7'-0"	1 3/4	C	WOOD	STAIN	–	3	HM	PAINT	5/A3.2	–	(1) (2)
11	3'-0"	7'-0"	1 3/4	C	WOOD	STAIN	–	3	HM	PAINT	5/A3.2	–	(1) (2)
12	3'-0"	7'-0"	1 3/4	C	WOOD	STAIN	C	3	HM	PAINT	6/A3.2	C	–
13	3'-0"	7'-0"	1 3/4	C	WOOD	STAIN	–	3	HM	PAINT	6/A3.2	–	–
14	3'-0"	7'-0"	1 3/4	C	WOOD	STAIN	–	3	HM	PAINT	6/A3.2	–	–
15	3'-0"	7'-0"	1 3/4	C	WOOD	STAIN	–	3	HM	PAINT	6/A3.2	–	–
16	3'-0"	7'-0"	1 3/4	B	WOOD	STAIN	–	3	HM	PAINT	6/A3.2	–	–
17	3'-0"	7'-0"	1 3/4	B	WOOD	STAIN	–	3	HM	PAINT	6/A3.2	–	–
18	3'-0"	7'-0"	1 3/4	C	WOOD	STAIN	–	3	HM	PAINT	6/A3.2	–	–
19	3'-0"	7'-0"	1 3/4	C	WOOD	STAIN	–	3	HM	PAINT	6/A3.2	–	–
20	8'-0"	5'-2"	1 3/4	D	STEEL	PAINT	C	–	–	PAINT	3/A3.2	C	–
21	3'-0"	7'-0"	1 3/4	C	WOOD	STAIN	C	3	HM	PAINT	5/A3.2	C	(1) (2)
22	3'-0"	7'-0"	1 3/4	C	WOOD	STAIN	C	3	HM	PAINT	5/A3.2	C	(1) (2)
23	3'-0"	7'-0"	1 3/4	C	WOOD	STAIN	–	3	HM	PAINT	6/A3.2	–	–
24	3'-0"	7'-0"	1 3/4	C	WOOD	STAIN	–	3	HM	PAINT	6/A3.2	–	–
25	8'-0"	5'-2"	1 3/4	D	STEEL	PAINT	C	–	–	PAINT	3/A3.2	C	–
26	3'-0"	7'-0"	1 3/4	C	WOOD	STAIN	C	3	HM	PAINT	5/A3.2	C	(1) (2)
													–
101	3'-0"	6'-8"	1 3/4	C	WOOD	PAINT	–	3	HM	PAINT	9/A3.2	C	–

GENERAL NOTES: DOOR AND FRAME SCHEDULE
(1) ADD WOOD CASING (MOULDING TYPE "E") TO LOBBY SIDE OF FRAME.
(2) DOOR TO BE PROVIDED BY OWNER, INSTALLED BY CONTRACTOR.
(3) SEE DRAWING A3.2 FOR DETAILS

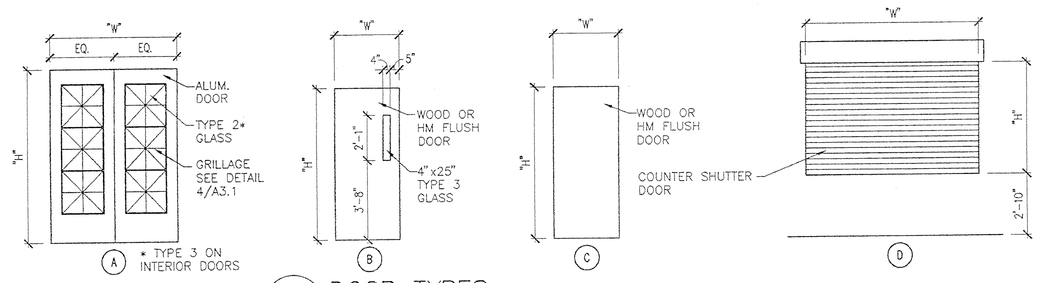

1 A3.1 DOOR TYPES
SCALE: 1/4"=1'-0"

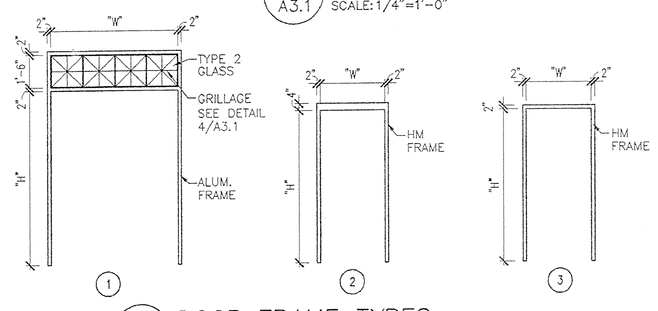

2 A3.1 DOOR FRAME TYPES
SCALE: 1/4"=1'-0"

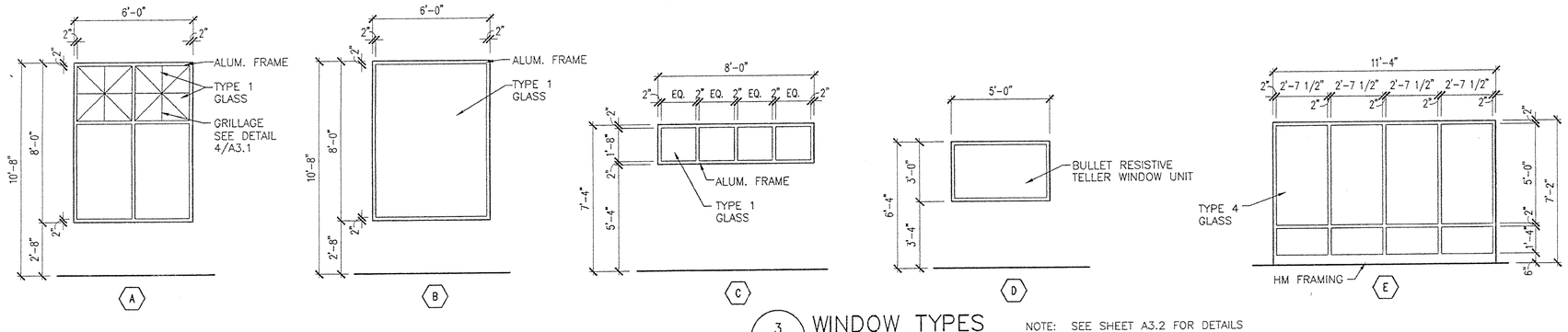

3 A3.1 WINDOW TYPES
SCALE: 1/4"=1'-0"
NOTE: SEE SHEET A3.2 FOR DETAILS

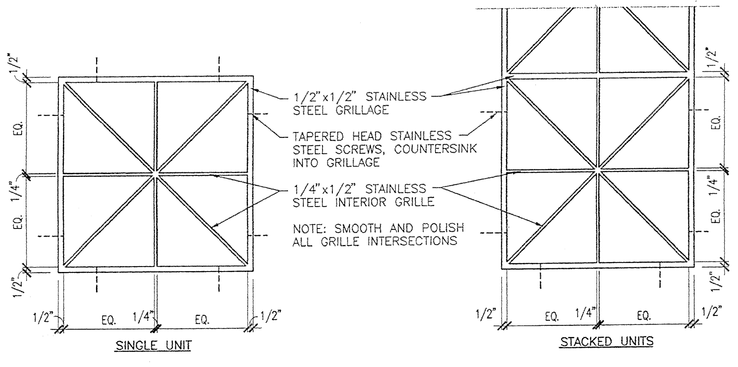

4 A3.1 GRILLAGE DETAILS
SCALE: 1 1/2"=1'-0"

Stantec Architecture Inc.
4875 Riverside Drive
Macon, Georgia U.S.A.
31210-1117
Tel. 478.474.6100
Fax. 478.476.8373
www.stantec.com

Stantec

Copyright Reserved
The Contractor shall verify and be responsible for all dimensions. DO NOT scale the drawing – any errors or omissions shall be reported to Stantec Architecture Inc. without delay.
The Copyrights to all designs and drawings are the property of Stantec Architecture Inc. Reproduction or use for any purpose other than that authorized by Stantec Architecture Inc. is forbidden.

Consultants

Legend

Notes

Revision	By	Appd.	Date

Issued	By	Appd.	Date
	AHR		05/02/01

File Name: m04a3-1.dwg

Dwn.	Chkd.	Dsgn.	Date

Permit-Seal

STATE OF GEORGIA · DAVID L. RICHARDSON · CERTIFICATE NO. 15680 · REGISTERED ARCHITECT

Client/Project
MULTI-MODAL TRANSPORTATION ADMINISTRATION BUILDING

DOUGLAS COUNTY, GEORGIA

DOUGLASVILLE, GEORGIA U.S.A.

Title
SCHED. & DOOR/WIND. TYPES

Project No. DC0001.000
Scale
Drawing No. A3.1
Sheet 3 of
Revision 0

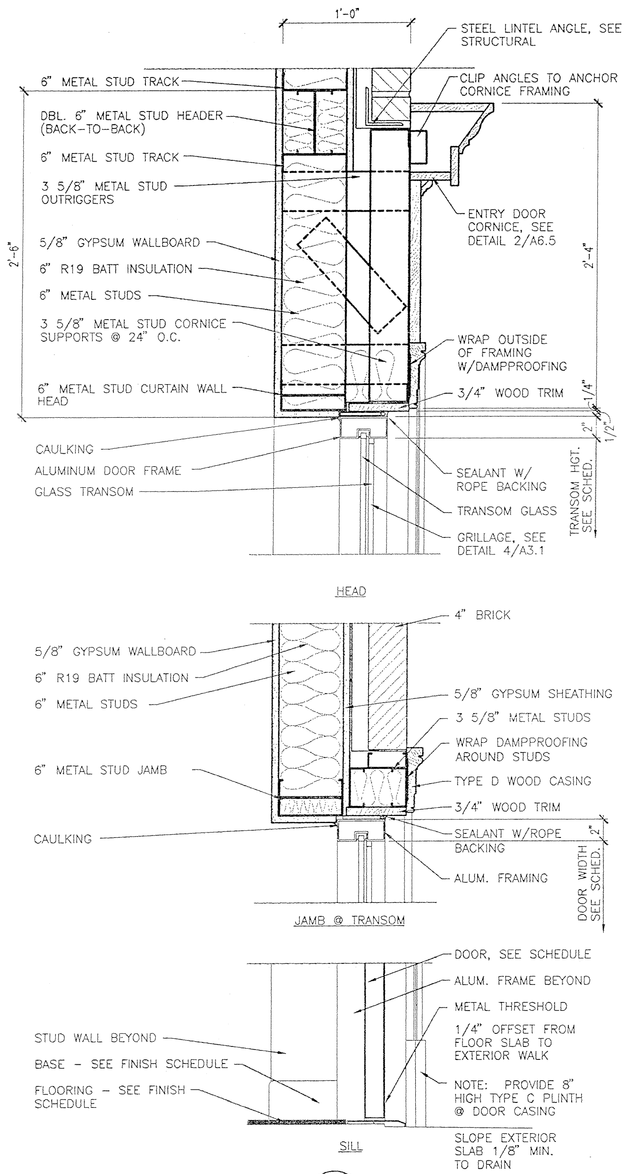

1 A3.2 DOOR SECTION
SCALE: 1 1/2"=1'-0"

SOUND BATT INSULATION, SEE FLOOR PLAN FOR LOCATIONS

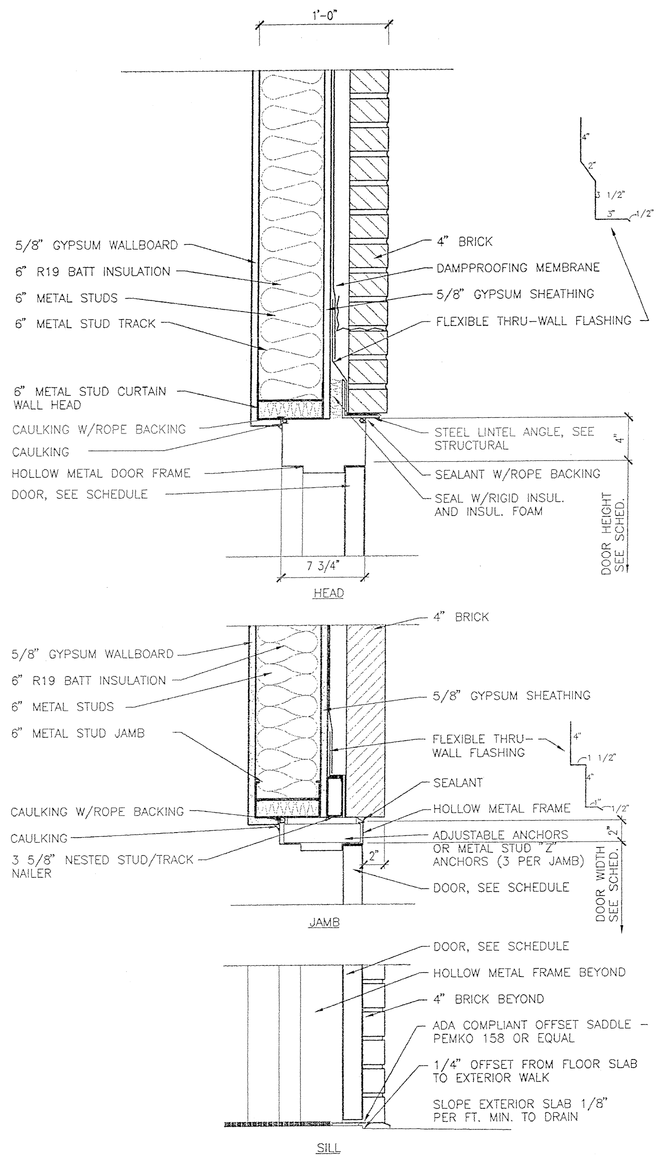

2 A3.2 DOOR SECTION
SCALE: 1 1/2"=1'-0"

SOUND BATT INSULATION, SEE FLOOR PLAN FOR LOCATIONS

NOTE: GYPSUM WALLBOARD SHALL BE FIRE RATED TYPE X AS REQUIRED BY WALL FIRE RATING, SEE ARCHITECTURAL FIRE PROTECTION AND SOUND INSUL. PLANS 2/A2.2 AND 4/A2.2.

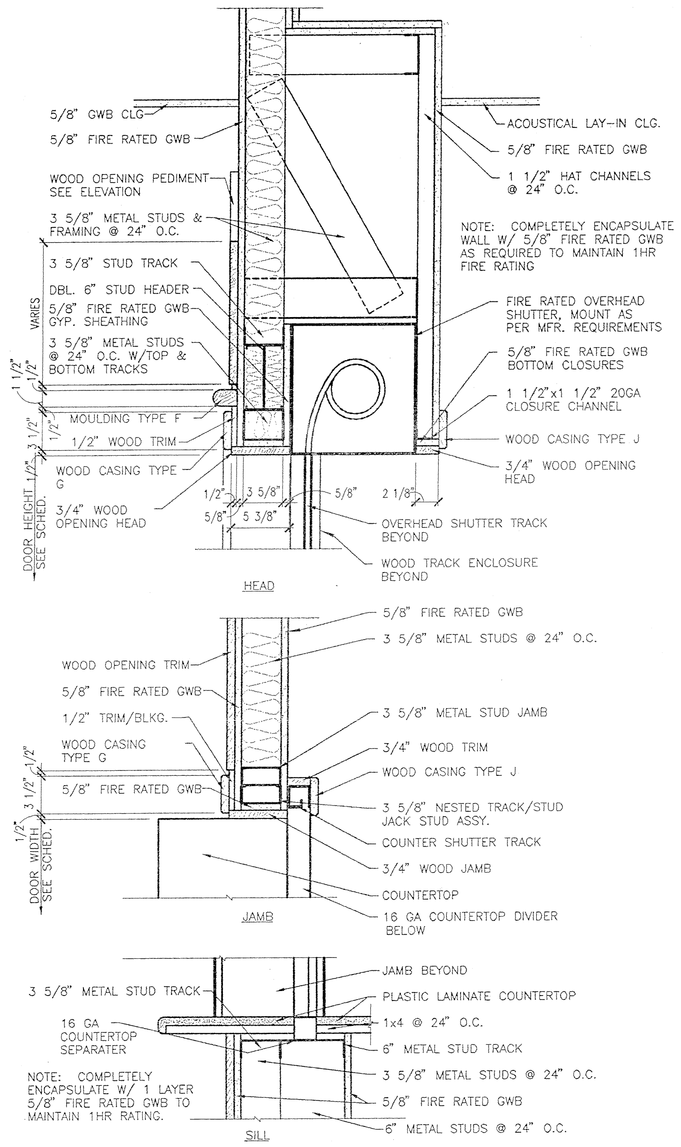

3 A3.2 COUNTER SHUTTER DOOR DETAIL
SCALE: 1 1/2"=1'-0"

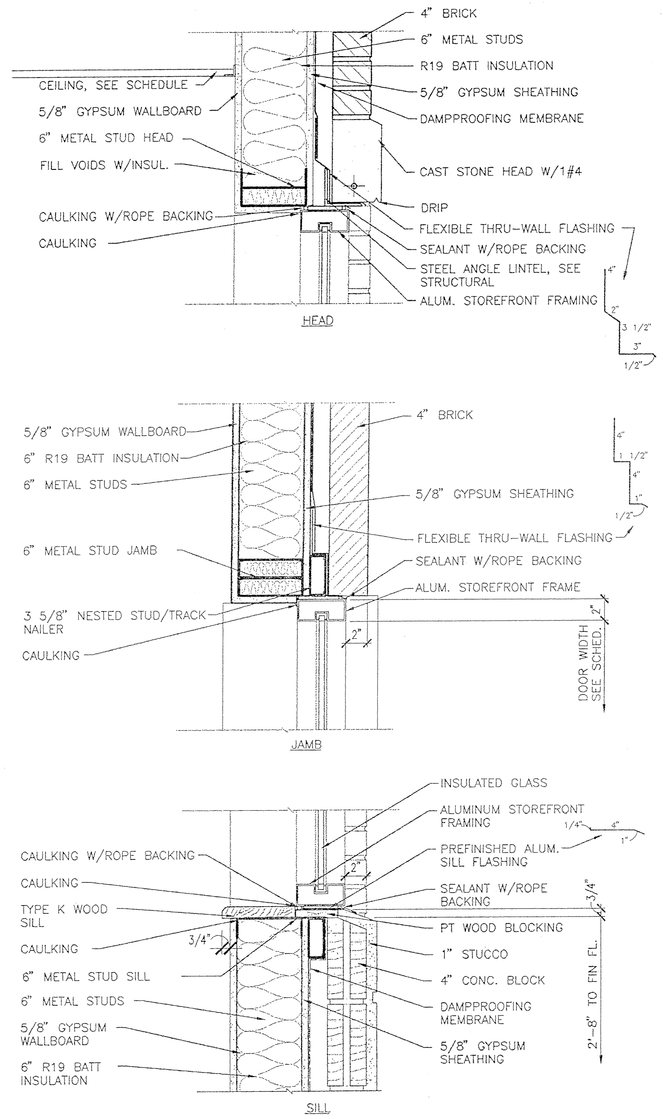

4 A3.2 WINDOW TYPE A & B SECTION
SCALE: 1 1/2"=1'-0"

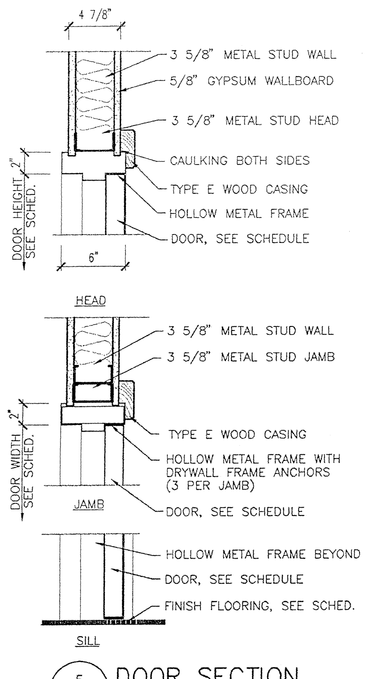

5 A3.2 DOOR SECTION
SCALE: 1 1/2"=1'-0"

NOTE: INSTALL WOOD CASING ON LOBBY SIDE OF DOOR ONLY.

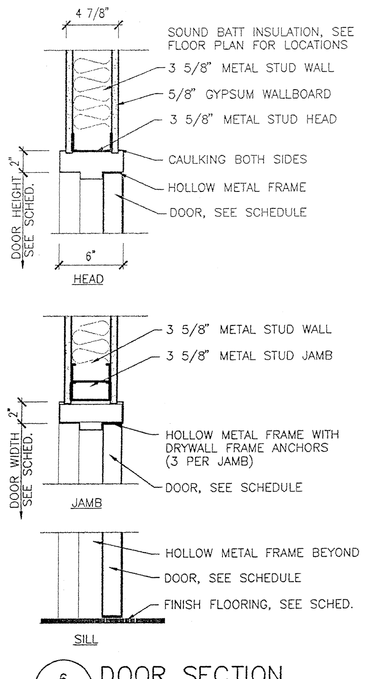

6 A3.2 DOOR SECTION
SCALE: 1 1/2"=1'-0"

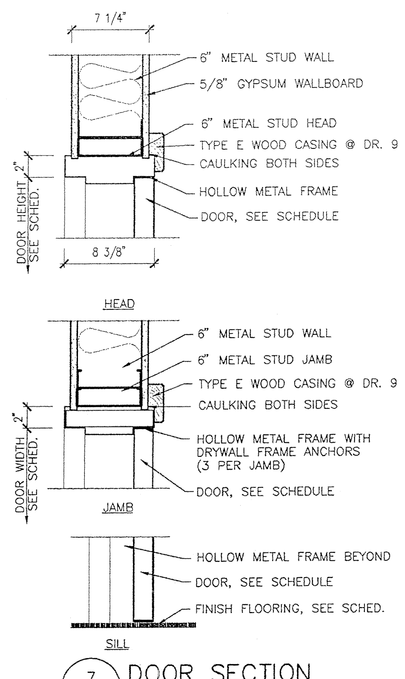

7 A3.2 DOOR SECTION
SCALE: 1 1/2"=1'-0"

NOTE: ALL WOOD TYPE E CASINGS ARE TO BE INSTALLED ON LOBBY SIDE OF DOOR FRAME ONLY

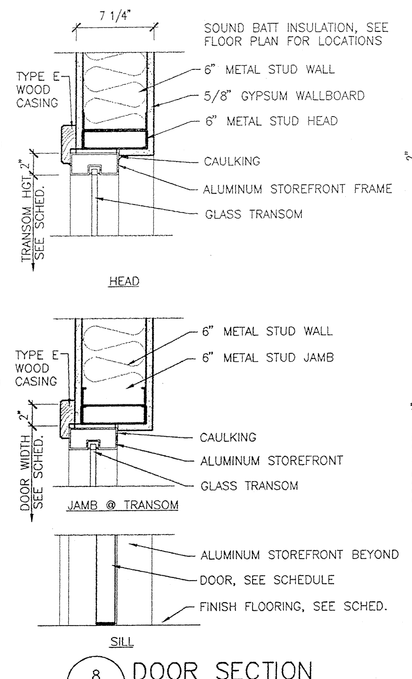

8 A3.2 DOOR SECTION
SCALE: 1 1/2"=1'-0"

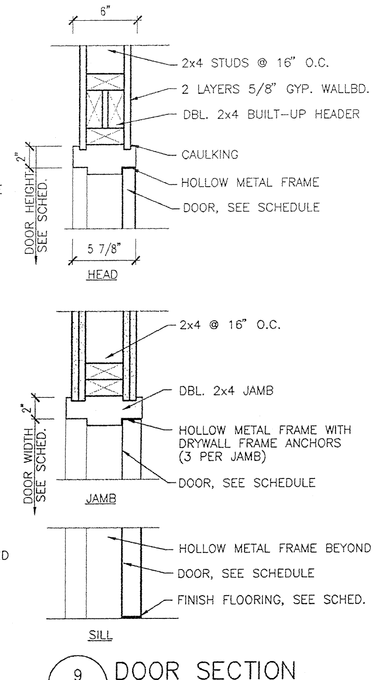

9 A3.2 DOOR SECTION
SCALE: 1 1/2"=1'-0"

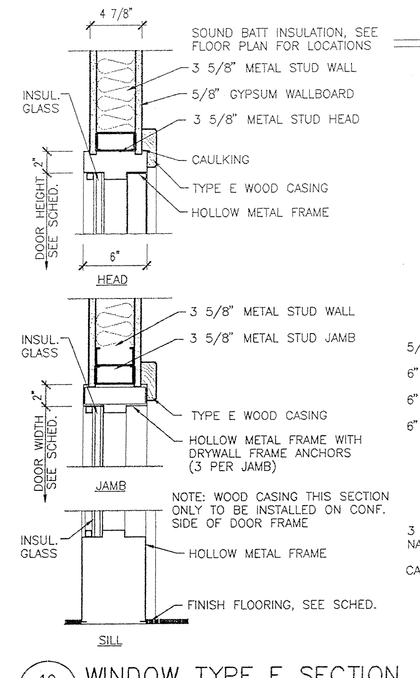

10 A3.2 WINDOW TYPE E SECTION
SCALE: 1 1/2"=1'-0"

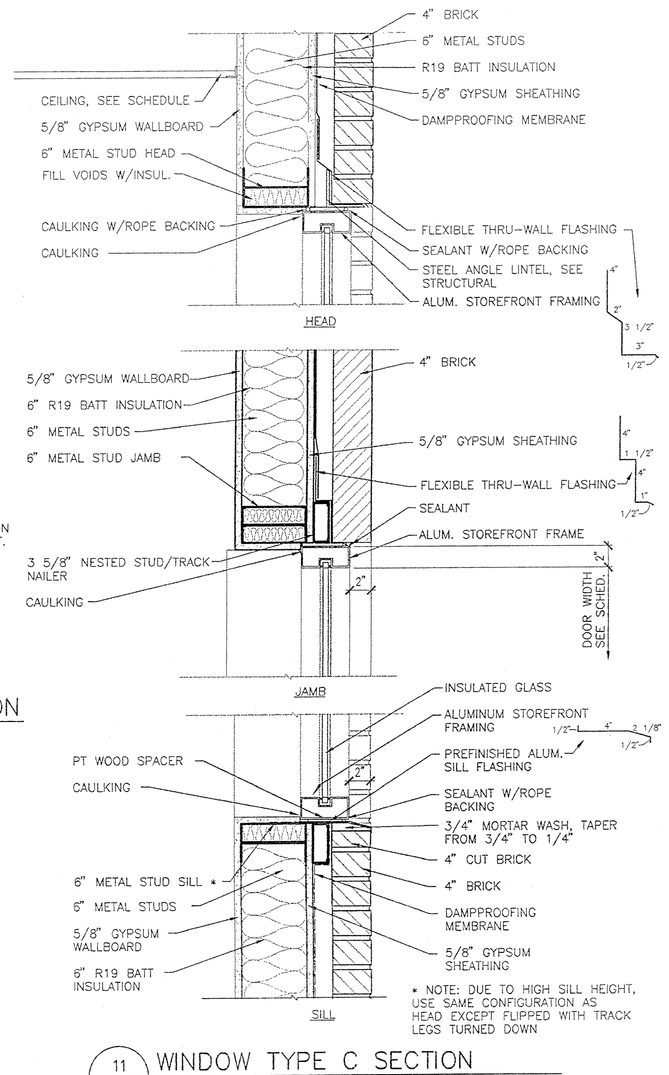

11 A3.2 WINDOW TYPE C SECTION
SCALE: 1 1/2"=1'-0"

Stantec Architecture Inc.
4875 Riverside Drive
Macon, Georgia U.S.A.
31210-1117
Tel. 478.474.6100
Fax. 478.476.8373
www.stantec.com

Stantec

Copyright Reserved
The Contractor shall verify and be responsible for all dimensions. DO NOT scale the drawing - any errors or omissions shall be reported to Stantec Architecture Inc. without delay.
The Copyrights to all designs and drawings are the property of Stantec Architecture Inc. Reproduction or use for any purpose other than that authorized by Stantec Architecture Inc. is forbidden.

Consultants

Legend

Notes

Revision	By	Appd.	Date

Issued	By	Appd.	Date
	DRR		05/03/01

File Name: m04a3-2.dwg

Dwn.	Chkd.	Dsgn.	Date

Permit-Seal

STATE OF GEORGIA
DAVID L. RICHARDSON
CERTIFICATE NO. 14561
REGISTERED ARCHITECT

Client/Project
MULTI-MODAL TRANSPORTATION ADMINISTRATION BUILDING
DOUGLAS COUNTY, GEORGIA
DOUGLASVILLE, GEORGIA U.S.A.

Title
DOOR & WINDOW DETAILS

Project No. DCO001.000
Scale
Drawing No. A3.2
Sheet 3 2 of
Revision 0

ORIGINAL SHEET - ARCH (24x42) j:\arch\projects\dco1.2\a_f3
plot date: 05/02/2001 by: gfrasier

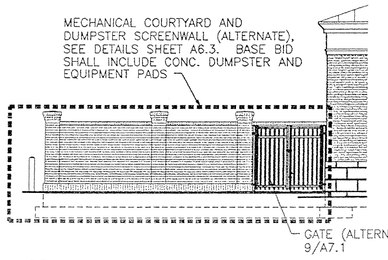

1A / A4.1 PARTIAL NORTH ELEVATION W/ALTERNATE
SCALE: 1/8" = 1'-0"

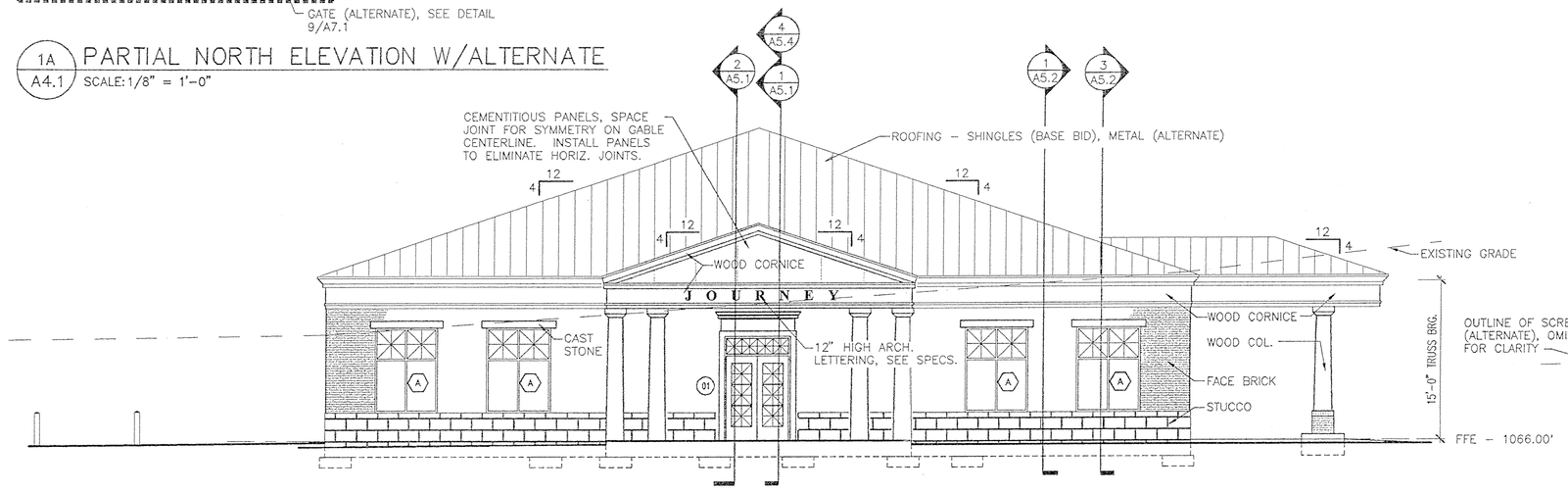

1 / A4.1 NORTH ELEVATION
SCALE: 1/8" = 1'-0"

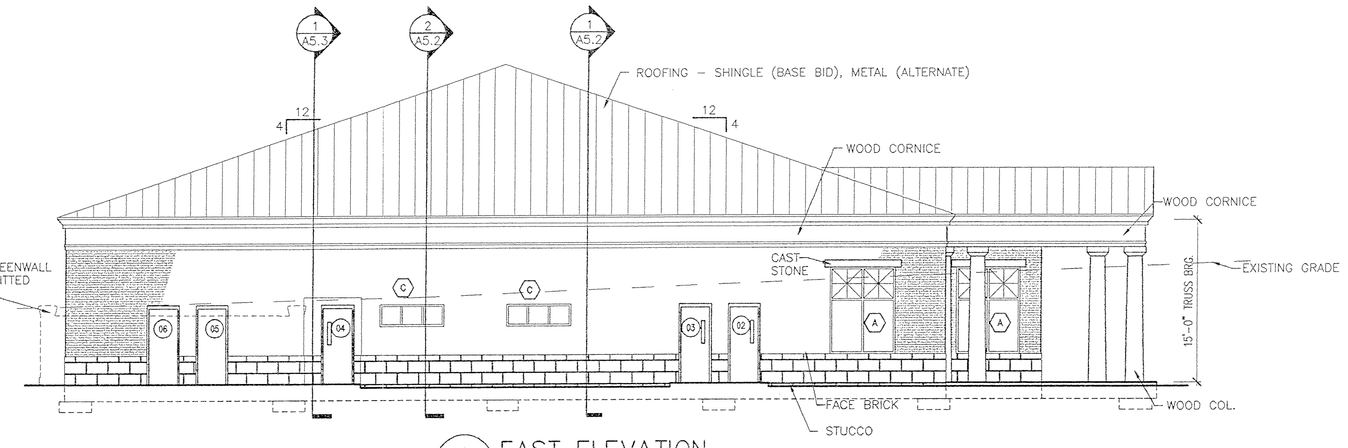

2 / A4.1 EAST ELEVATION
SCALE: 1/8" = 1'-0"

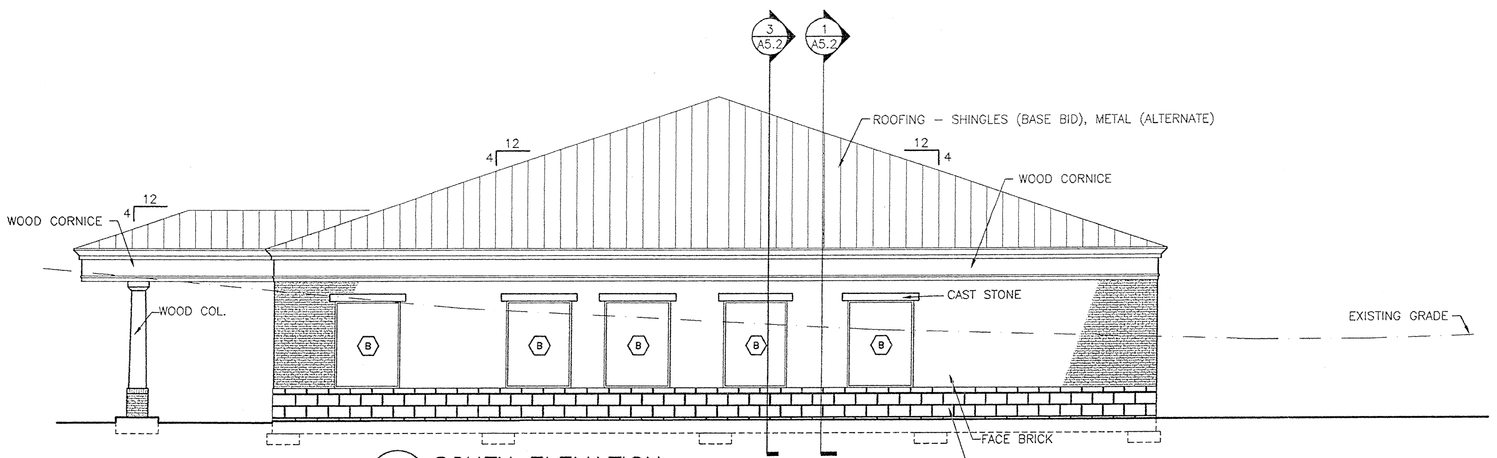

3 / A4.1 SOUTH ELEVATION
SCALE: 1/8" = 1'-0"

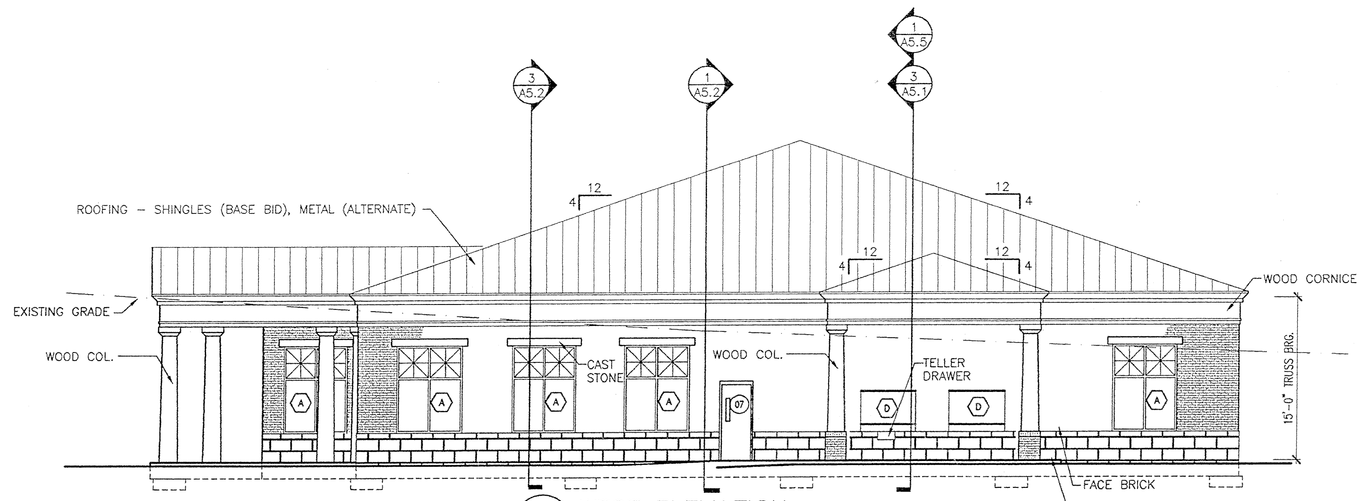

4 / A4.1 WEST ELEVATION
SCALE: 1/8" = 1'-0"

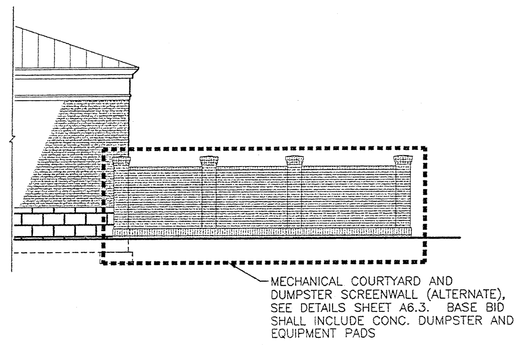

3A / A4.1 PARTIAL SOUTH ELEVATION W/ALTERNATE
SCALE: 1/8" = 1'-0"

Stantec Architecture Inc.
4875 Riverside Drive
Macon, Georgia U.S.A.
31210-1117
Tel. 478.474.6100
Fax. 478.476.8373
www.stantec.com

Stantec

Copyright Reserved
The Contractor shall verify and be responsible for all dimensions. DO NOT scale the drawing - any errors or omissions shall be reported to Stantec Architecture Inc. without delay.
The Copyrights to all designs and drawings are the property of Stantec Architecture Inc. Reproduction or use for any purpose other than that authorized by Stantec Architecture Inc. is forbidden.

Consultants

Legend

Notes

Revision	By	Appd.	Date

Issued	By	Appd.	Date
		DLR	05/03/01

File Name: m04a4-1.dwg

Dwn.	Chkd.	Dsgn.	Date

Permit-Seal

STATE OF GEORGIA
DAVID L. RICHARDSON
CERTIFICATE No.: 14080
REGISTERED ARCHITECT

Client/Project
MULTI-MODAL TRANSPORTATION ADMINISTRATION BUILDING
DOUGLAS COUNTY, GEORGIA
DOUGLASVILLE, GEORGIA U.S.A.

Title
EXTERIOR ELEVATIONS

Project No. DCC001.000
Scale

Drawing No. A4.1
Sheet 33 of
Revision 0

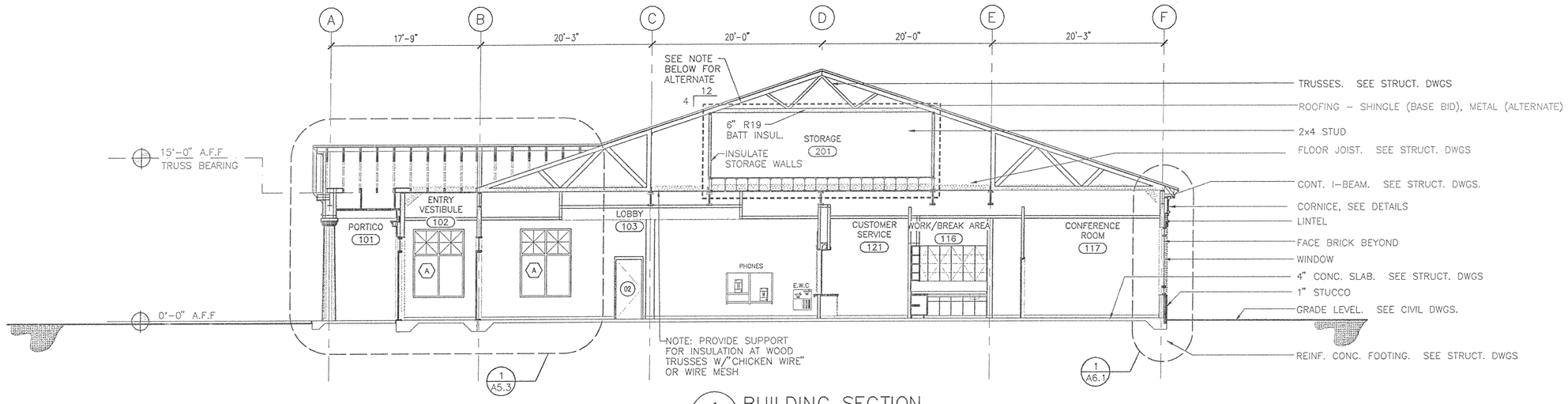

1 A5.1 BUILDING SECTION
SCALE: 1/8" =1'-0"

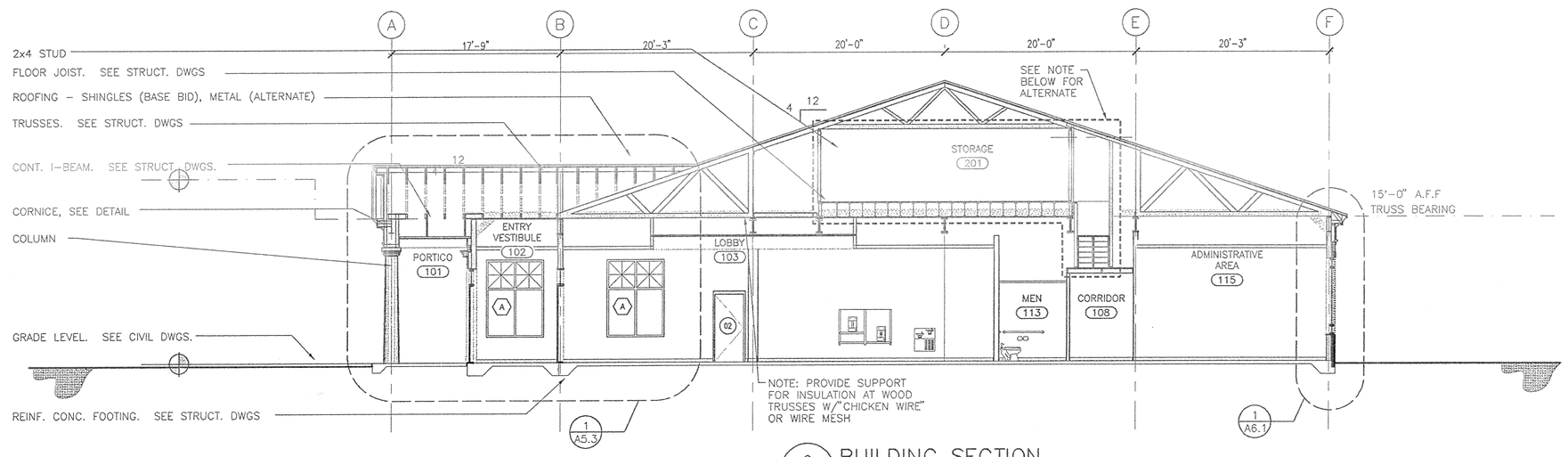

2 A5.1 BUILDING SECTION
SCALE: 1/8" =1'-0"

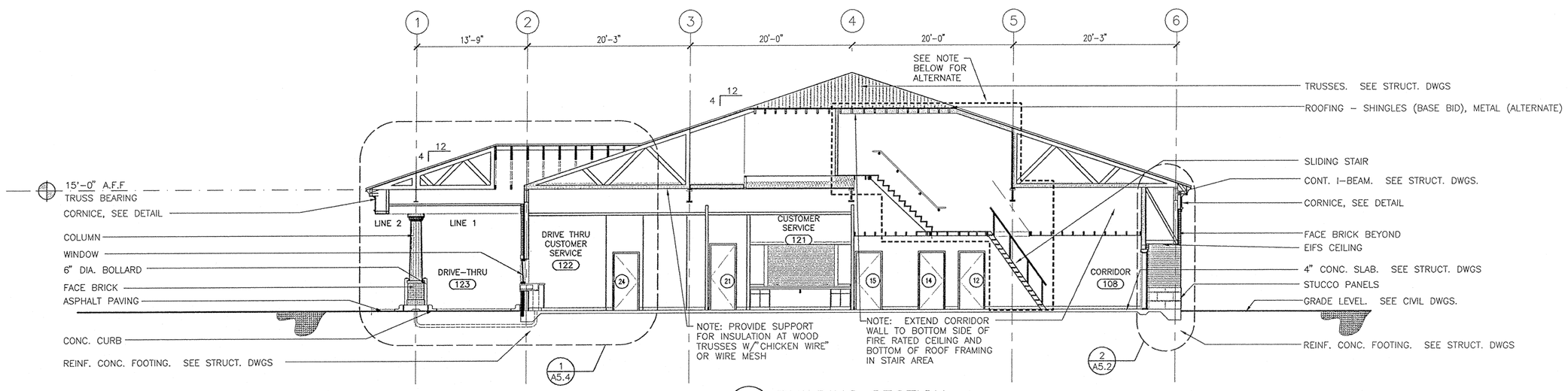

3 A5.1 BUILDING SECTION
SCALE: 1/8" =1'-0"

STORAGE AREA ALTERNATE NOTE: STORAGE AREA, STAIRS, RAILINGS ARE AN ADDITIVE ALTERNATE TO BASE BID. UNDER THE BASE BID, ROOF TRUSSES SHALL BE SUBSTITUTED FOR ATTIC FLOOR FRAMING AND SHALL BEAR ON WOOD BLOCKING ON STEEL BEAMS. IN ADDITION,UNDER THE BASE BID ALL FIRE RATED WALLS ON 1ST FLOOR WILL BE EXTENDED TO THE BOTTOM OF THE ROOF DECK AND SEALED.

Stantec Architecture Inc.
4875 Riverside Drive
Macon, Georgia U.S.A.
31210-1117
Tel. 478.474.6100
Fax. 478.476.8373
www.stantec.com

Stantec

Copyright Reserved

The Contractor shall verify and be responsible for all dimensions. DO NOT scale the drawing – any errors or omissions shall be reported to Stantec Architecture Inc. without delay.
The Copyrights to all designs and drawings are the property of Stantec Architecture Inc. Reproduction or use for any purpose other than that authorized by Stantec Architecture Inc. is forbidden.

Consultants

Legend

Notes

Revision	By	Appd.	Date

Issued	By	Appd.	Date
	DRR		05/03/01

File Name: m04a5-1.dwg

Dwn.	Chkd.	Dsgn.	Date

Permit-Seal

STATE OF GEORGIA
DAVID L. RICHARDSON
No. 14-0-1
REGISTERED ARCHITECT

Client/Project

MULTI-MODAL TRANSPORTATION ADMINISTRATION BUILDING

DOUGLAS COUNTY, GEORGIA

DOUGLASVILLE, GEORGIA U.S.A.

Title

BUILDING SECTIONS

Project No. DCO001.000

Scale

Drawing No. A5.1

Sheet 3 of 4

Revision 0

DRAWING No. 1001/02/03.dwg
PSI Aug-1-2001 14:09:11 Lynch\Lynch\g5 LAYOUT: ARCH - 1SHEET

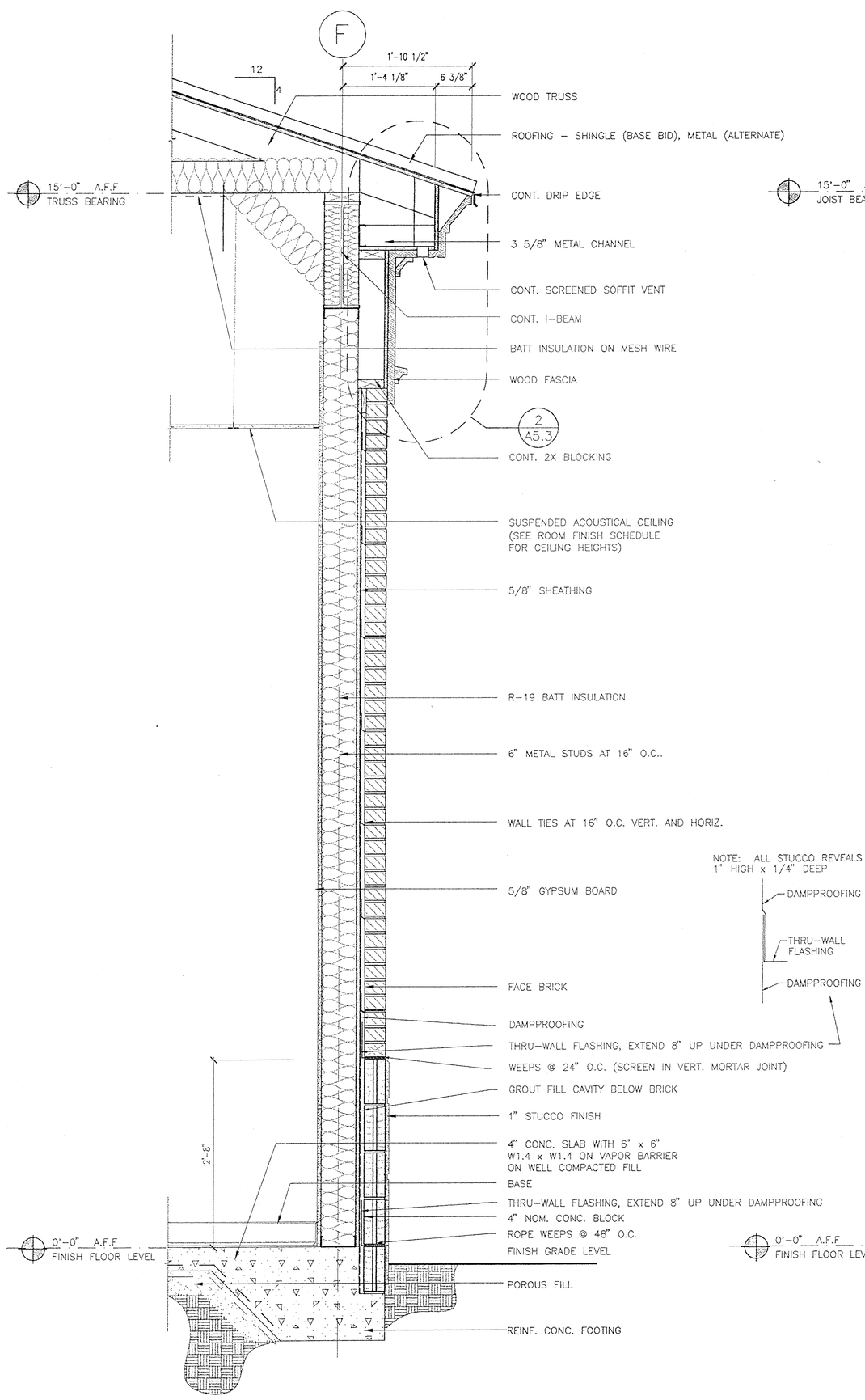

1 A5.2 TYP. WALL SECTION
SCALE: 1" = 1'-0"

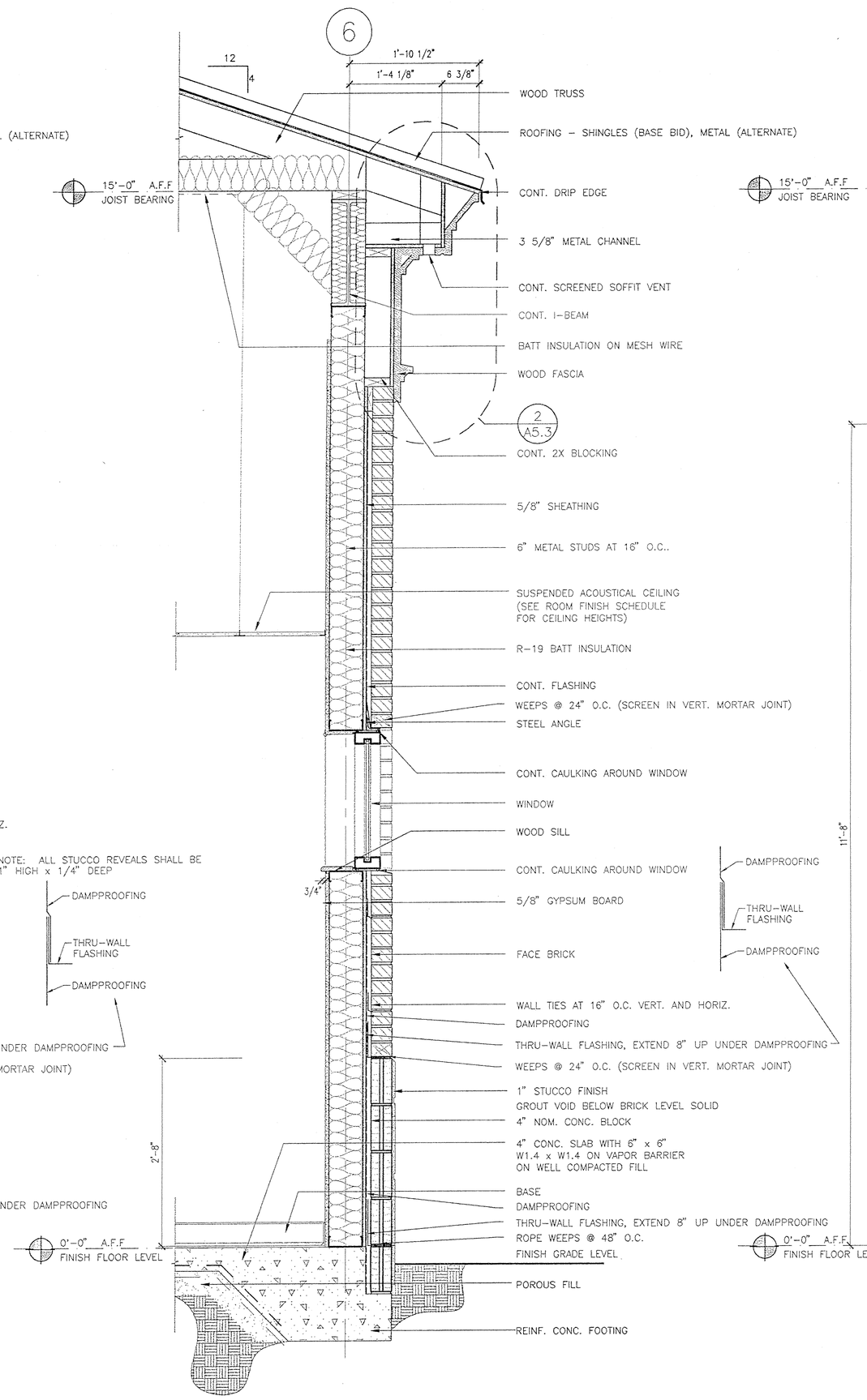

2 A5.2 WALL SECTION
SCALE: 1" = 1'-0"

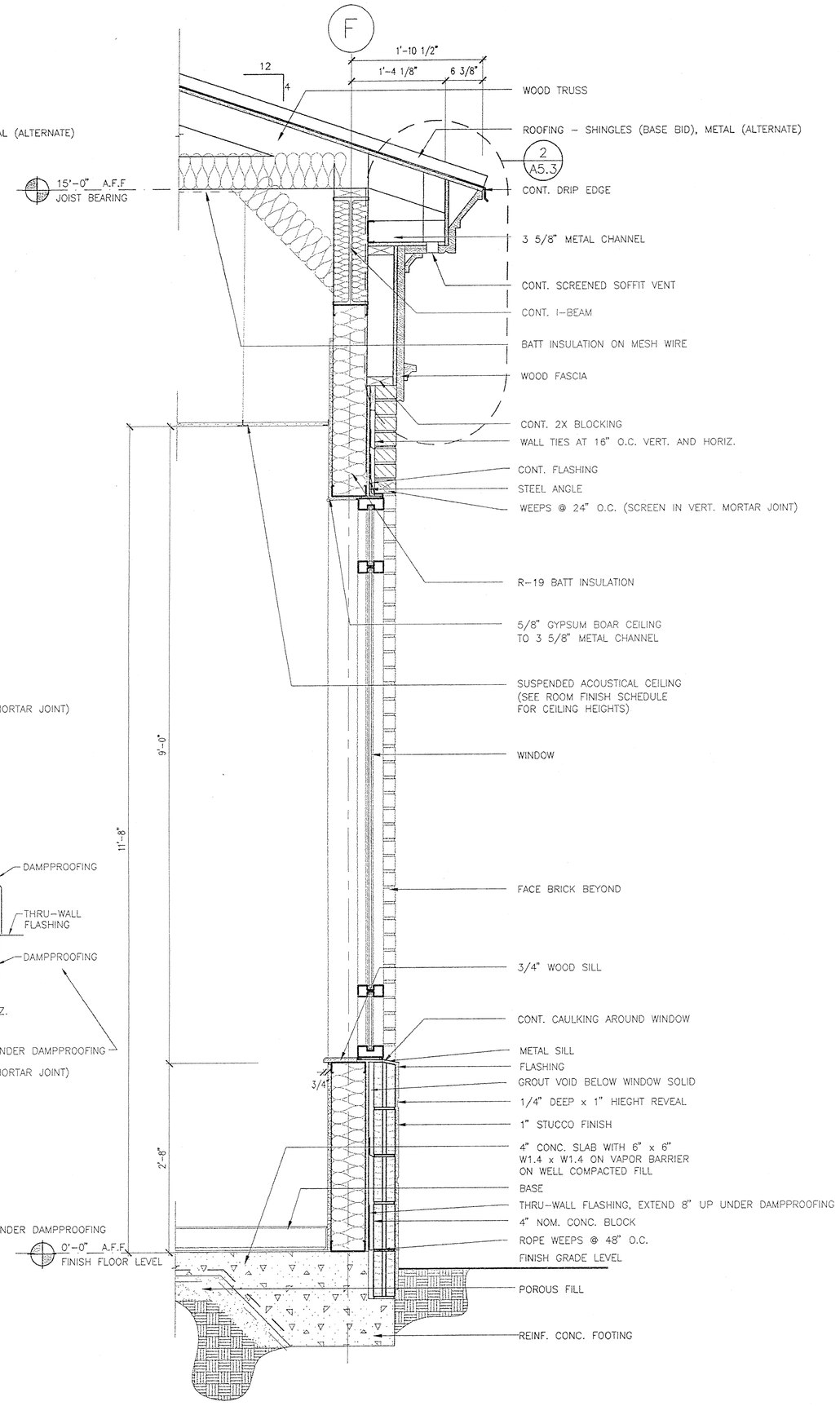

3 A5.2 WALL SECTION
SCALE: 1" = 1'-0"

Stantec Architecture Inc.
4875 Riverside Drive
Macon, Georgia U.S.A.
31210-1117
Tel. 478.474.6100
Fax. 478.476.8373
www.stantec.com

Stantec

Copyright Reserved
The Contractor shall verify and be responsible for all dimensions. DO NOT scale the drawing – any errors or omissions shall be reported to Stantec Architecture Inc. without delay.
The Copyrights to all designs and drawings are the property of Stantec Architecture Inc. Reproduction or use for any purpose other than that authorized by Stantec Architecture Inc. is forbidden.

Consultants

Legend

Notes

Revision	By	Appd.	Date

Issued	By	Appd.	Date
	ADPR		05/03/01

File Name: m04a5-2.dwg

Dwn.	Chkd.	Dsgn.	Date

Permit-Seal

STATE OF GEORGIA
DAVID L. RICHARDSON
CERTIFICATE NO. 15851
REGISTERED ARCHITECT

Client/Project
MULTI-MODAL TRANSPORTATION ADMINISTRATION BUILDING
DOUGLAS COUNTY, GEORGIA
DOUGLASVILLE, GEORGIA U.S.A.

Title
WALL SECTIONS

Project No. DCO001.000
Scale
Drawing No. A5.2
Sheet 35 of
Revision 0

ORIGINAL SHEET - ARCH (24x36") g:\arch\drawings\arch-2.dwg 1:2
plot date: 05/03/2001 by: dlemcott

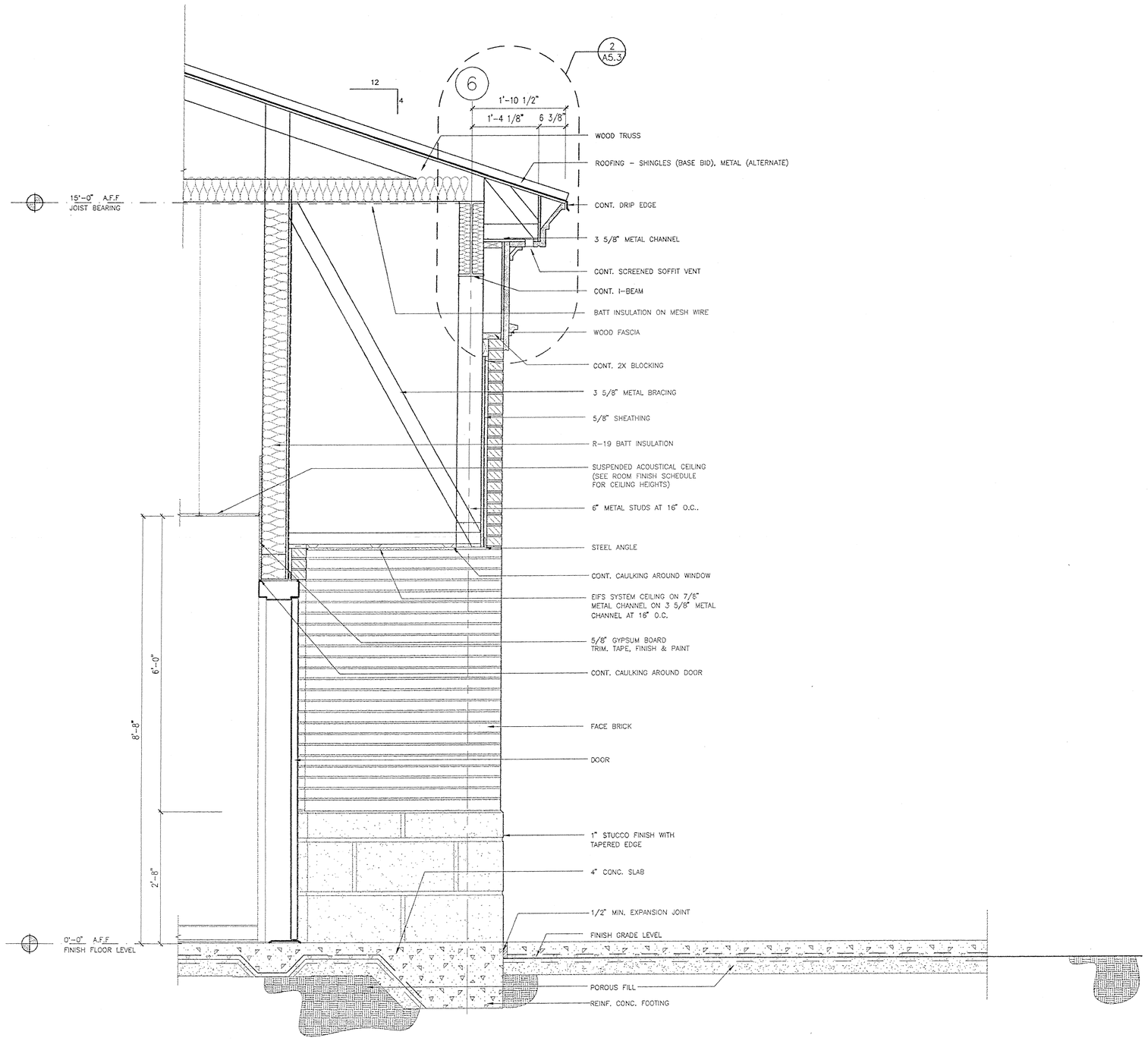

1 A5.3 WALL SECTION – CORRIDOR 111
SCALE: 3/4" = 1'-0"

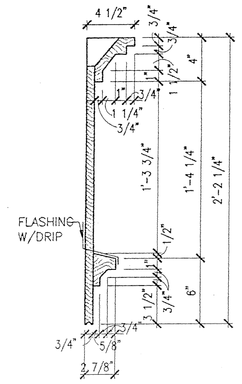

BOTTOM PROFILE

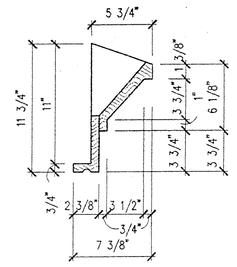

TOP PROFILE

ALL TRIM SHALL BE FABRICATED FROM WOOD FOR THE PROFILES SHOWN. WHERE SHEET MATERIAL IS TO BE USED, PROVIDE HARDWOOD EDGING AT ALL EXPOSED FACES. EDGING SHALL BE MIN. 3/4" THICK.

2 A5.3 TYP. EAVE PROFILE
SCALE: 1 1/2" = 1'-0"

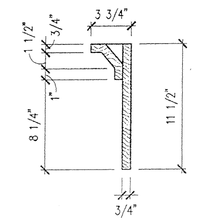

3 A5.3 TYP. EAVE PROFILE
SCALE: 1 1/2" = 1'-0"

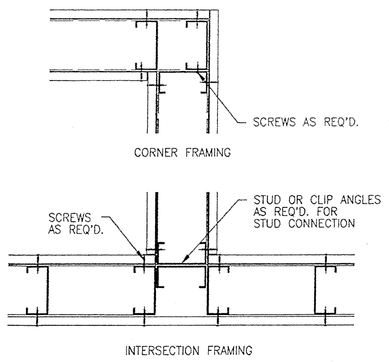

4 A5.3 METAL STUD DET. – INTERSECT FRAM.
SCALE: N.T.S.

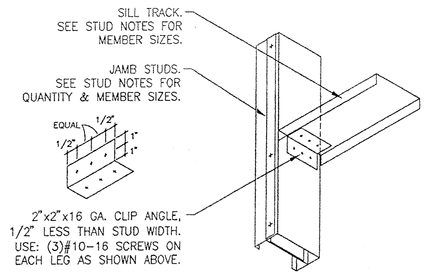

6 A5.3 METAL STUD DET. – SILL TRACK
SCALE: N.T.S.

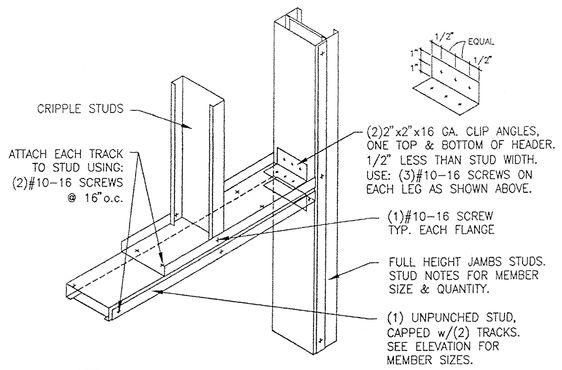

8 A5.3 METAL STUD DET. – CURT. WALL HEAD
SCALE: N.T.S.

METAL STUD NOTES:

1. ALL EXTERIOR METAL STUDS SHALL BE 6" 18GA METAL STUDS W/ 1 3/8" FLANGES (EQUAL TO UNIMAST 60CSN18) AND SHALL BE SPACED @ 16" O.C.
2. ALL STUD TRACKS SHALL BE OF SAME DEPTH AND GAUGE AS STUDS.
3. JAMB STUDS SHALL CONSIST OF 1 NESTED STUD/TRACK ASSEMBLY AND 1 STUD @ EACH JAMB.
4. AT ALL WALLS AND OPENINGS, PACK ALL ASSEMBLIES (INCLUDING BUT NOT LIMITED TO HEADS AND JAMBS) WITH LOOSE FITTING INSULATION (DO NOT COMPRESS).

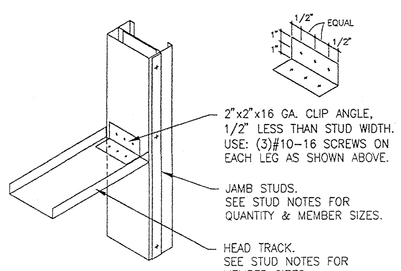

5 A5.3 METAL STUD DET. – NON LD BRG HEAD
SCALE: N.T.S.

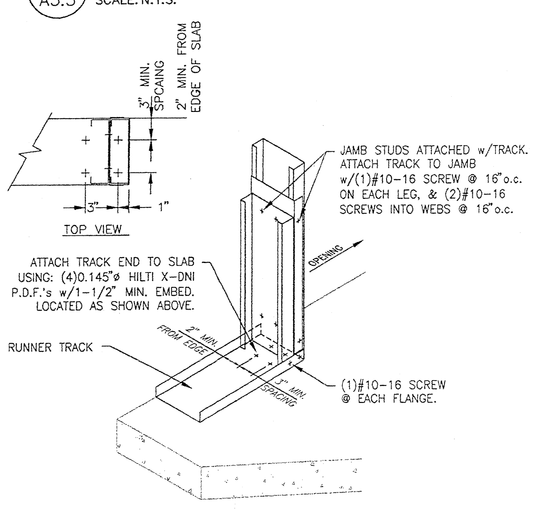

7 A5.3 METAL STUD DET. – DOOR JAMB ANCH.
SCALE: N.T.S.

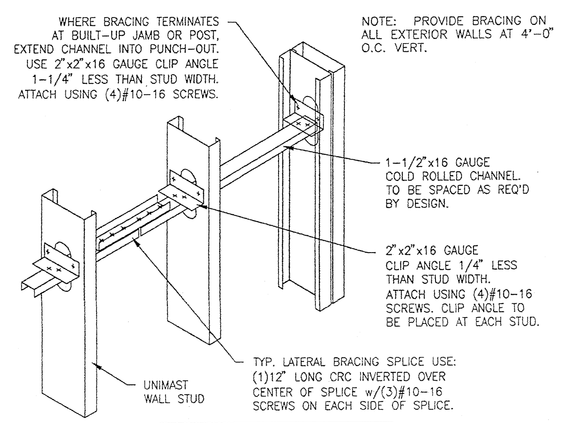

THIS DETAIL IS NOT SUITABLE FOR WALL STUDS DEEPER THAN 8"

9 A5.3 METAL STUD DET. – LATERAL BRACING
SCALE: N.T.S.

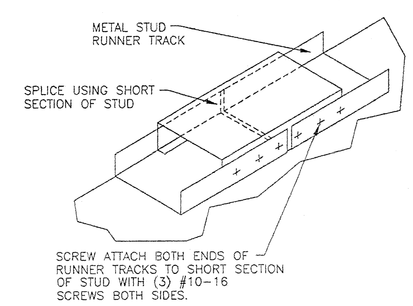

10 A5.3 METAL STUD DET. – TRACK SPLICE
SCALE: N.T.S.

Stantec Architecture Inc.
4875 Riverside Drive
Macon, Georgia U.S.A.
31210-1117
Tel. 478.474.6100
Fax. 478.476.8373
www.stantec.com

Copyright Reserved
The Contractor shall verify and be responsible for all dimensions. DO NOT scale the drawing – any errors or omissions shall be reported to Stantec Architecture Inc. without delay.
The Copyrights to all designs and drawings are the property of Stantec Architecture Inc. Reproduction or use for any purpose other than that authorized by Stantec Architecture Inc. is forbidden.

Consultants

Legend

Notes

Revision	By	Appd.	Date

Issued	By	Appd.	Date
	RDR		05/30/01

File Name: m04a5-3.dwg

Dwn.	Chkd.	Dsgn.	Date

Permit-Seal

STATE OF GEORGIA
DAVID L. RICHARDSON
CERTIFICATE NO. 14891
REGISTERED ARCHITECT

Client/Project
MULTI-MODAL TRANSPORTATION ADMINISTRATION BUILDING
DOUGLAS COUNTY, GEORGIA
DOUGLASVILLE, GEORGIA U.S.A.

Title
WALL SECTION & FASCIA DETAIL

Project No. DCO001.000
Scale
Drawing No. A5.3
Sheet 3 of 6
Revision 0

ORIGINAL SHEET - ARCH (24x42) g:\arch\drawing\m04a5-3.dwg /7b
PLOT DATE: 05/30/2001 - by: dpressutt

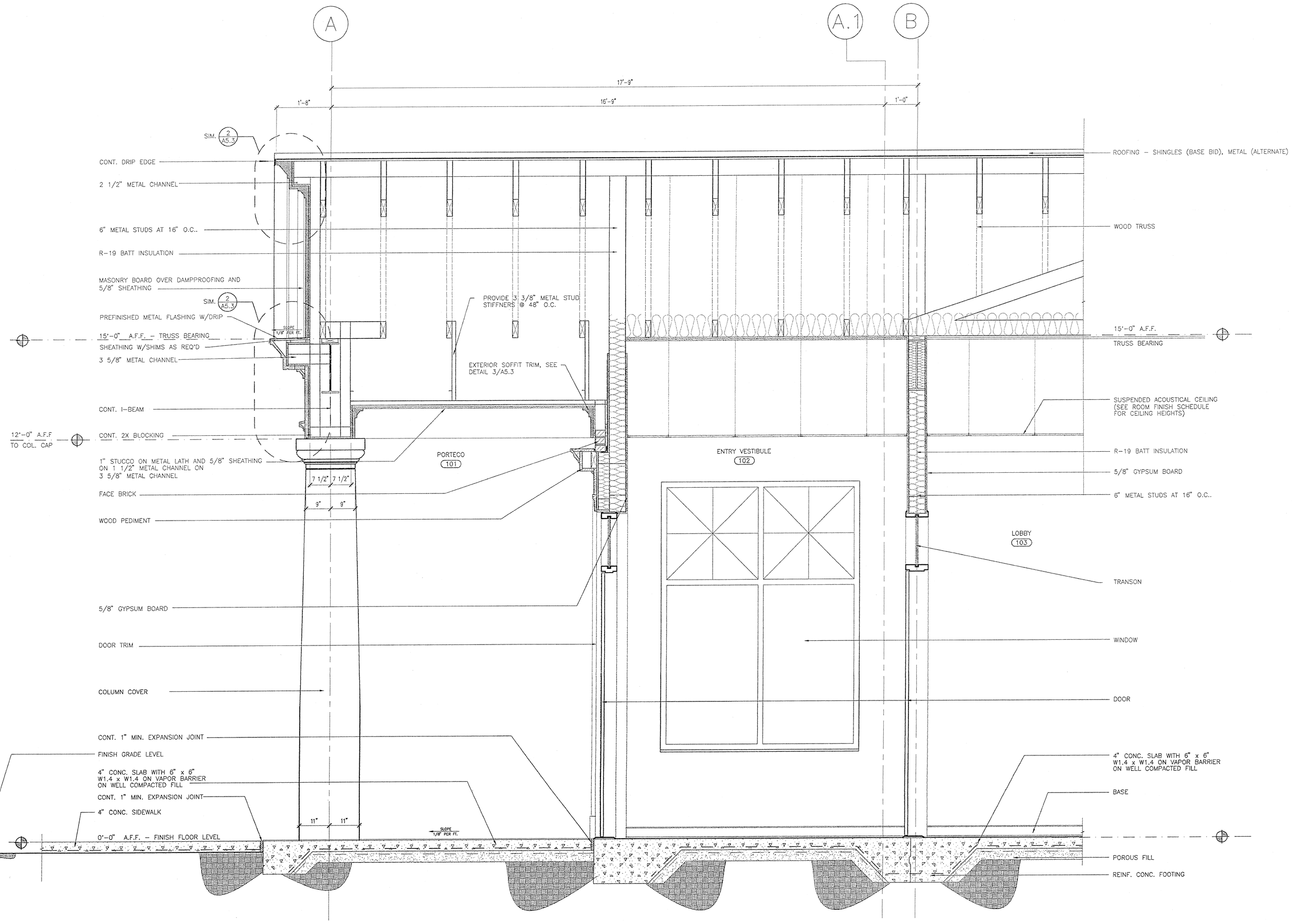

1 / A5.4 WALL SECTION - ENTRY VESTIBULE
SCALE: 3/4" = 1'-0"

Stantec Architecture Inc.
4875 Riverside Drive
Macon, Georgia U.S.A.
31210-1117
Tel. 478.474.6100
Fax. 478.476.8373
www.stantec.com

Stantec

Copyright Reserved

The Contractor shall verify and be responsible for all dimensions. DO NOT scale the drawing - any errors or omissions shall be reported to Stantec Architecture Inc. without delay.
The Copyrights to all designs and drawings are the property of Stantec Architecture Inc. Reproduction or use for any purpose other than that authorized by Stantec Architecture Inc. is forbidden.

Consultants

Legend

Notes

Revision	By	Appd.	Date

Issued	By	Appd.	Date
	DFR		05/05/01

File Name: m04a5-4.dwg

Dwn.	Chkd.	Dsgn.	Date

Permit-Seal

STATE OF GEORGIA
DAVID L. RICHARDSON
CERTIFICATE NO. 12-12
REGISTERED ARCHITECT

Client/Project

MULTI-MODAL TRANSPORTATION ADMINISTRATION BUILDING

DOUGLAS COUNTY, GEORGIA

DOUGLASVILLE, GEORGIA U.S.A.

Title

WALL SECTION - ENTRY VEST. 102

Project No.	Scale	
DCO001.000		
Drawing No.	Sheet	Revision
A5.4	of	0

ORIGINAL SHEET - ARCH (24x36") g:\arch\drawings\m04a5-4.dwg /16 plot date: 05/05/2001 by: dmccott

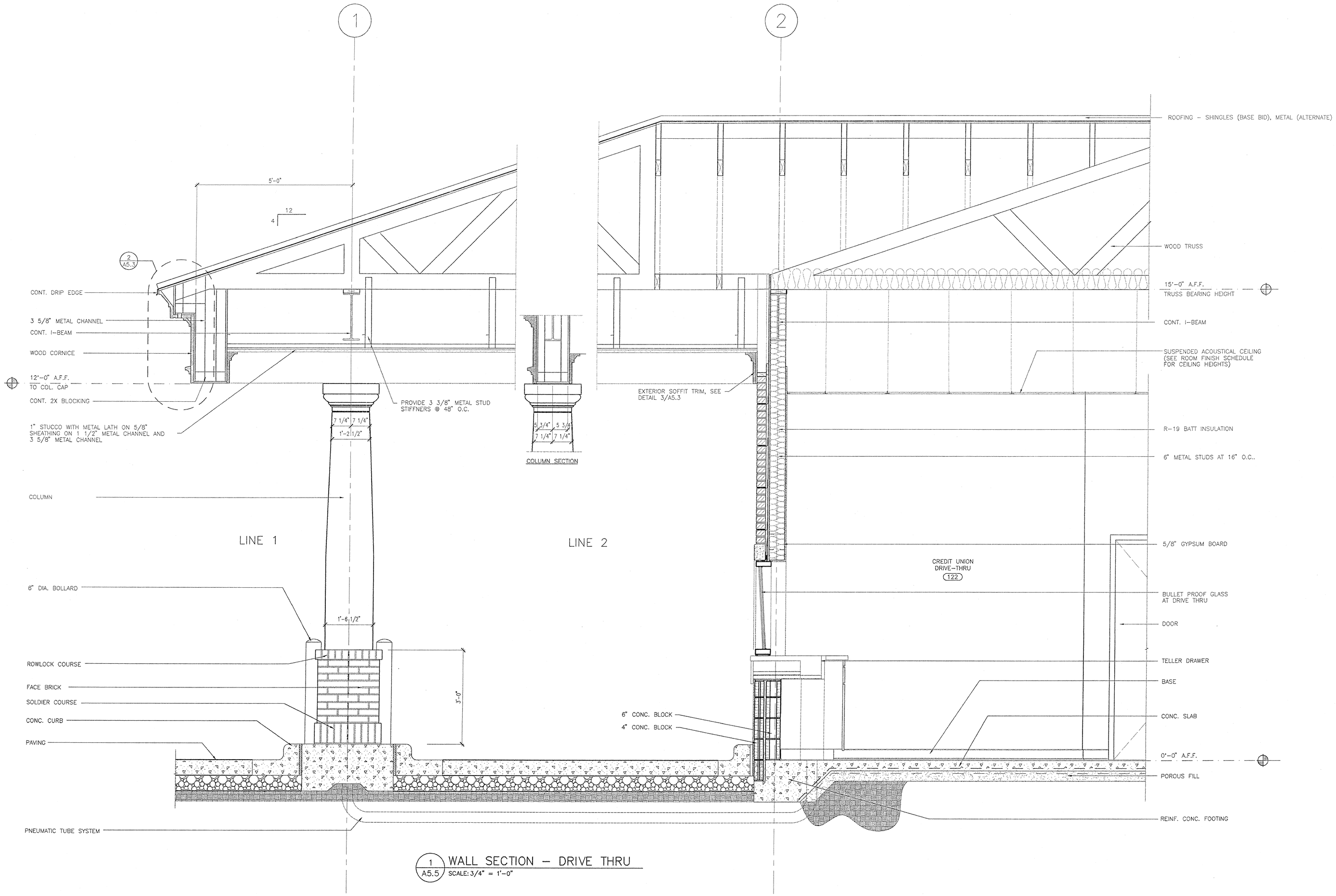

1 / A5.5 WALL SECTION – DRIVE THRU
SCALE: 3/4" = 1'-0"

Stantec Architecture Inc.
4875 Riverside Drive
Macon, Georgia U.S.A.
31210-1117
Tel. 478.474.6100
Fax. 478.476.8373
www.stantec.com

Stantec

Copyright Reserved

The Contractor shall verify and be responsible for all dimensions. DO NOT scale the drawing - any errors or omissions shall be reported to Stantec Architecture Inc. without delay.
The Copyrights to all designs and drawings are the property of Stantec Architecture Inc. Reproduction or use for any purpose other than that authorized by Stantec Architecture Inc. is forbidden.

Consultants

Legend

Notes

Revision	By	Appd.	Date

Issued	By	Appd.	Date
		DJR	08/23/01

File Name: m04a5-5.dwg

Dwn.	Chkd.	Dsgn.	Date

Permit-Seal

STATE OF GEORGIA
DAVID L. RICHARDSON
CERTIFICATE NO. 10-1
REGISTERED ARCHITECT

Client/Project

MULTI-MODAL TRANSPORTATION ADMINISTRATION BUILDING

DOUGLAS COUNTY, GEORGIA

DOUGLASVILLE, GEORGIA U.S.A.

Title

WALL SECTION - DRIVE THRU 123

Project No. DCC001.000

Scale

Drawing No. A5.5

Sheet 3 of

Revision 0

ORIGINAL SHEET - ARCH (24x36") g:\arch\drawings\m04a5-5.dwg /16
plot date: 05/31/2001 by: dlessum

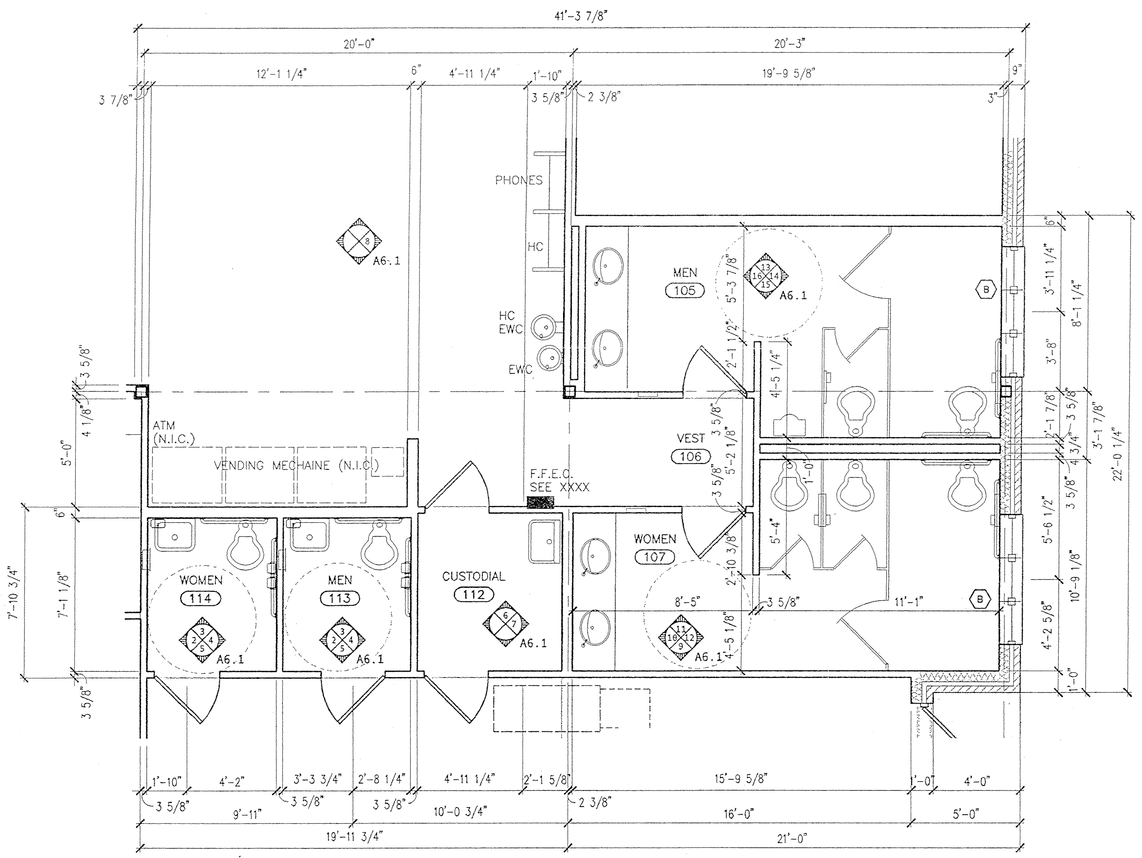

1 A6.1 ENLARGE PLAN
SCALE: 1/4"=1'-0"

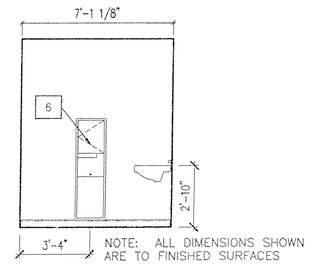

NOTE: ALL DIMENSIONS SHOWN ARE TO FINISHED SURFACES

2 A6.1 WOMEN – 114
MEN – 113
SCALE: 1/4"=1'-0"

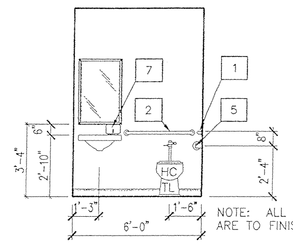

NOTE: ALL DIMENSIONS SHOWN ARE TO FINISHED SURFACES

3 A6.1 WOMEN – 114
MEN – 113
SCALE: 1/4"=1'-0"

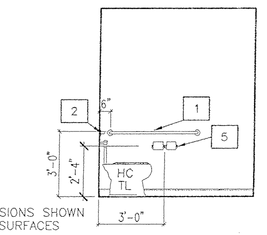

4 A6.1 WOMEN – 114
MEN – 113
SCALE: 1/4"=1'-0"

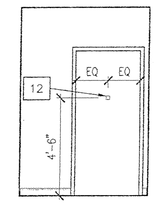

5 A6.1 WOMEN – 114
MEN – 113
SCALE: 1/4"=1'-0"

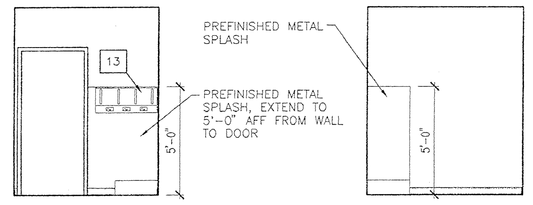

6 A6.1 CUSTODIAL– 112
SCALE: 1/4"=1'-0"

7 A6.1 CUSTODIAL– 112
SCALE: 1/4"=1'-0"

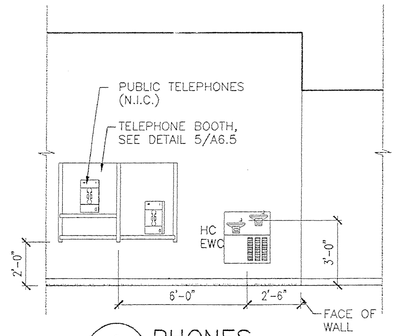

8 A6.1 PHONES
SCALE: 1/4"=1'-0"

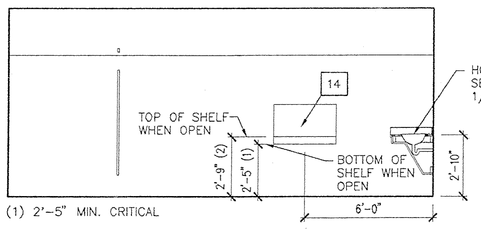

(1) 2'-5" MIN. CRITICAL
(2) 2'-10" MAX. CRITICAL

NOTE: ALL DIMENSIONS SHOWN ARE TO FINISHED SURFACES

9 A6.1 WOMEN RESTROOM–107
SCALE: 1/4"=1'-0"

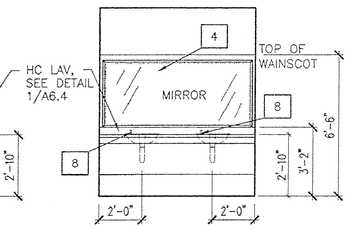

NOTE: ALL DIMENSIONS SHOWN ARE TO FINISHED SURFACES

10 A6.1 WOMEN RESTROOM–107
SCALE: 1/4"=1'-0"

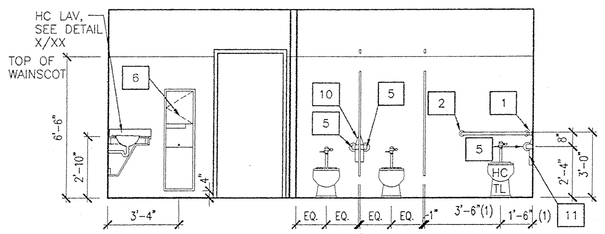

NOTE: ALL DIMENSIONS SHOWN ARE TO FINISHED SURFACES
(1) CRITICAL DIMENSION

11 A6.1 WOMEN RESTROOM–107
SCALE: 1/4"=1'-0"

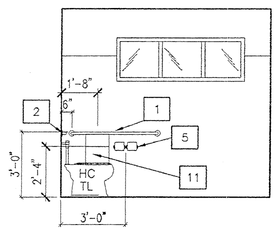

NOTE: ALL DIMENSIONS SHOWN ARE TO FINISHED SURFACES

12 A6.1 WOMEN RESTROOM–107
SCALE: 1/4"=1'-0"

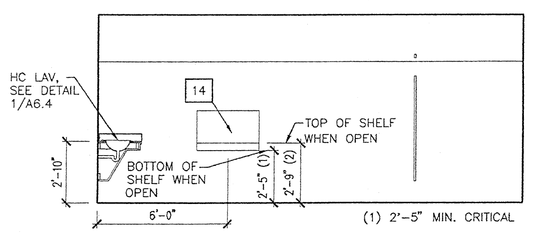

NOTE: ALL DIMENSIONS SHOWN ARE TO FINISHED SURFACES
(1) 2'-5" MIN. CRITICAL
(2) 2'-10" MAX. CRITICAL

13 A6.1 MEN RESTROOM–105
SCALE: 1/4"=1'-0"

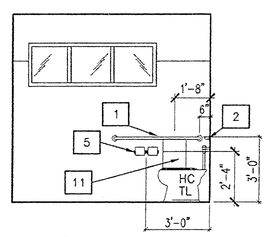

NOTE: ALL DIMENSIONS SHOWN ARE TO FINISHED SURFACES

14 A6.1 MEN RESTROOM–105
SCALE: 1/4"=1'-0"

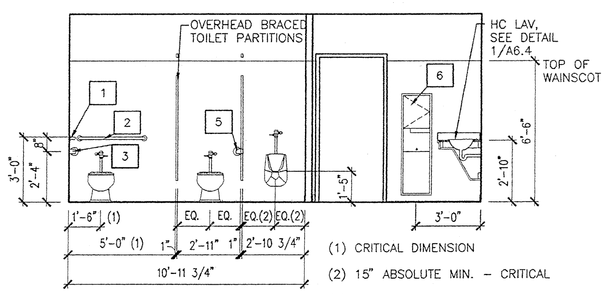

(1) CRITICAL DIMENSION
(2) 15" ABSOLUTE MIN. – CRITICAL
(3) ALL DIMENSIONS SHOWN ARE TO FINISHED SURFACES

15 A6.1 MEN RESTROOM–105
SCALE: 1/4"=1'-0"

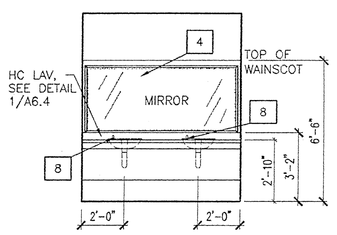

NOTE: ALL DIMENSIONS SHOWN ARE TO FINISHED SURFACES

16 A6.1 MEN RESTROOM–105
SCALE: 1/4"=1'-0"

NOTE: VERIFY LOCATIONS AND MOUNTING HEIGHTS WITH ARCHITECT PRIOR TO INSTALLATION OF FINISH MATERIALS OVER FRAMED WALLS SUCH THAT PROPER BLOCKING MAY BE PROVIDED.

SCHEDULE OF TOILET ACCESSORIES

ITEM No.	DESCRIPTION																							NOTES
1	48" GRAB BAR																							
2	36" GRAB BAR																							
3	MIRROR 24"x36"																							
4	MIRROR 84"x36"																							
5	ROLL PAPER HOLDER																							
6	TOWEL DISP/WASTE RECPT																							
7	SOAP DISP'R – COUNTER MTD.																							
8	SOAP DISP'R – DUAL																							
9	NAPKIN VENDOR																							
10	NAPKIN DISPOSAL – WALL																							
11	NAPKIN DISPOSAL – DUAL																							
12	ROBE HOOK																							
13	UTILITY/MOP STRIP																							
14	BABY CHANGING STATION																							
ROOM No.	QUANTITY																							NOTES
105	1	1	–	1	2	1	–	2	–	–	–	–	–	1										
107	1	1	1	–	–	–	1	–	–	–	–	–	1	–	–									
108	1	1	1	–	–	–	1	–	–	–	–	–	1	–	–									
109	1	–	–	–	–	–	–	–	–	–	–	–	–	1	–									
110	1	1	–	1	3	1	–	2	1	1	1	1	–	–	1									

Stantec Architecture Inc.
4875 Riverside Drive
Macon, Georgia U.S.A.
31210–1117
Tel. 478.474.6100
Fax. 478.476.8373
www.stantec.com

Stantec

Copyright Reserved

The Contractor shall verify and be responsible for all dimensions. DO NOT scale the drawing – any errors or omissions shall be reported to Stantec Architecture Inc. without delay.
The Copyrights to all designs and drawings are the property of Stantec Architecture Inc. Reproduction or use for any purpose other than that authorized by Stantec Architecture Inc. is forbidden.

Consultants

Legend

Notes

Revision	By	Appd.	Date

Issued	By	Appd.	Date
		RJR	05/03/01

File Name: m04a6-1.dwg

Dwn.	Chkd.	Dsgn.	Date

Permit-Seal

STATE OF GEORGIA
DAVID L. RICHARDSON
CERTIFICATE No. 14000
REGISTERED ARCHITECT

Client/Project
MULTI-MODAL TRANSPORTATION ADMINISTRATION BUILDING

DOUGLAS COUNTY, GEORGIA

DOUGLASVILLE, GEORGIA U.S.A.

Title
LS PLANS AND ELEVATIONS

Project No. DCO001.000

Scale

Drawing No. A6.1

Sheet 5 of 9

Revision 0

ORIGINAL SHEET – ARCH (30x42) G:\arch\drawings\m04a6-1.dwg / A6 plot date: 05/03/2001 by: dbassett

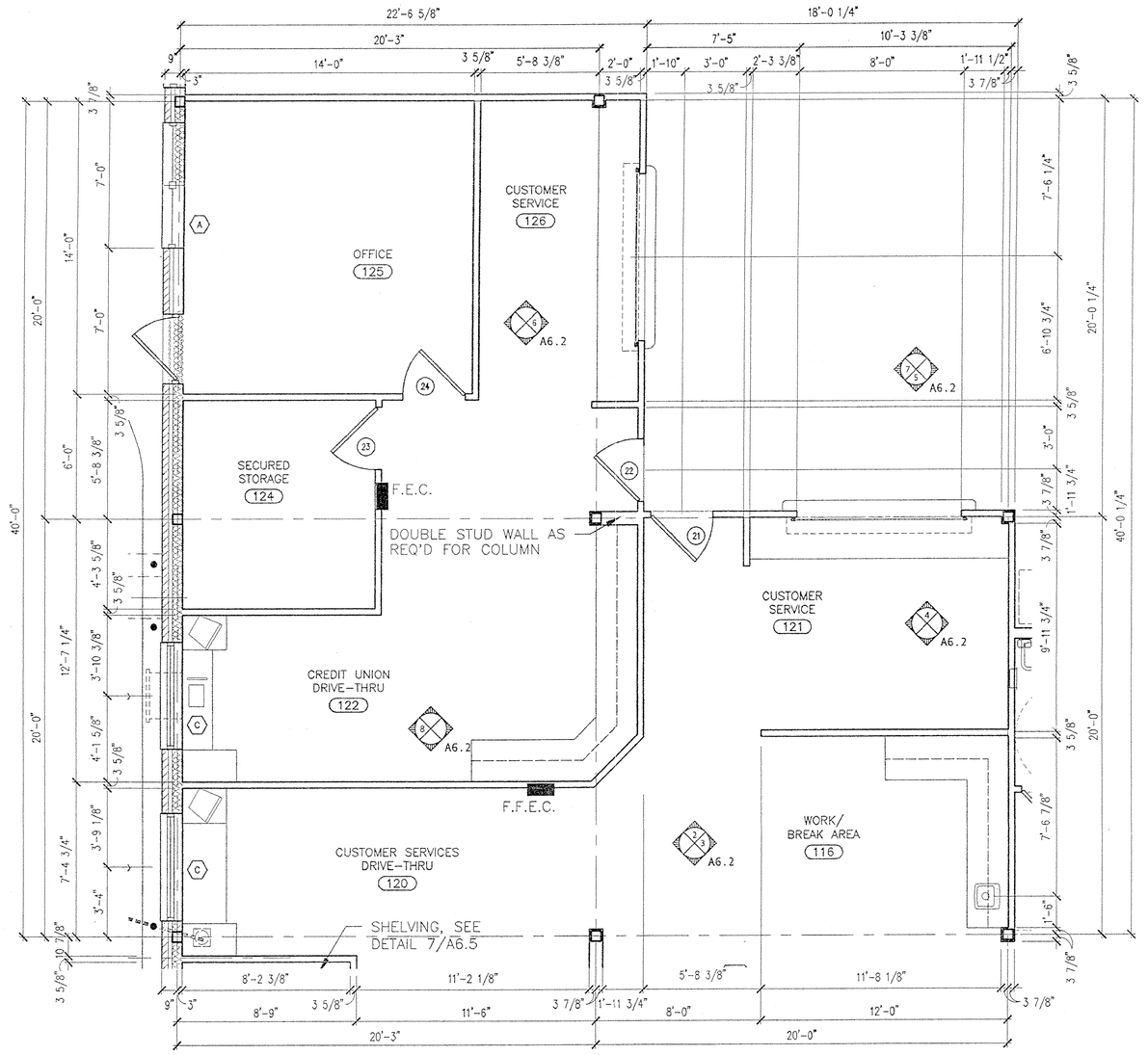

1 A6.2 ENLARGE PLAN
SCALE: 1/4"=1'-0"

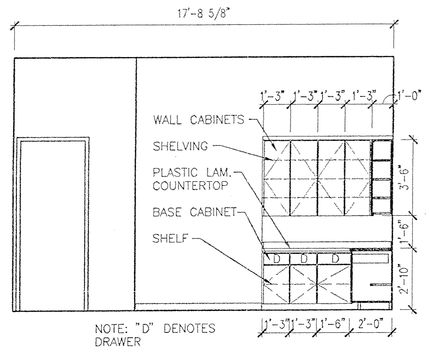

2 A6.2 WORK/ BREAK AREA -116
SCALE: 1/4"=1'-0"

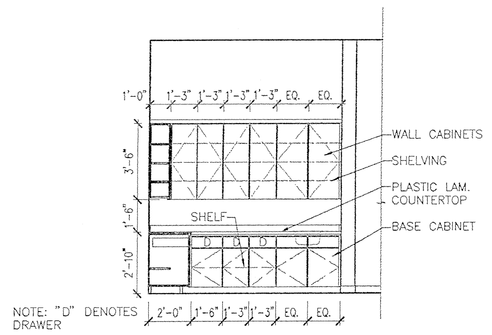

3 A6.2 WORK/ BREAK AREA-116
SCALE: 1/4"=1'-0"

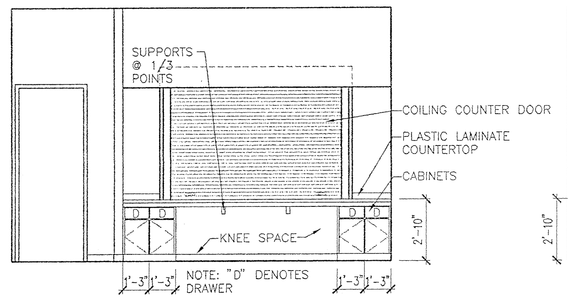

4 A6.2 CUSTOMER SERVICE-121
SCALE: 1/4"=1'-0"

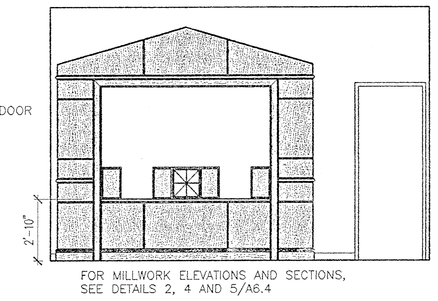

5 A6.2 CUSTOMER SERVICE-121
SCALE: 1/4"=1'-0"

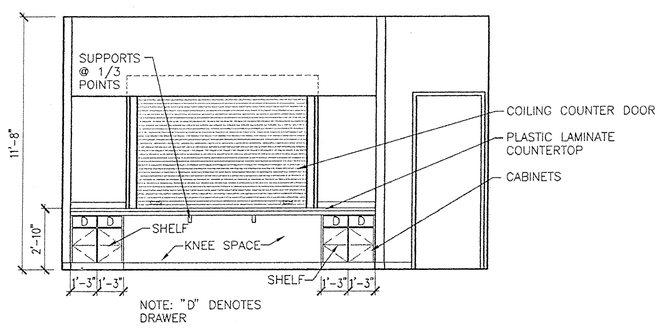

6 A6.2 CUSTOMER SERVICE-126
SCALE: 1/4"=1'-0"

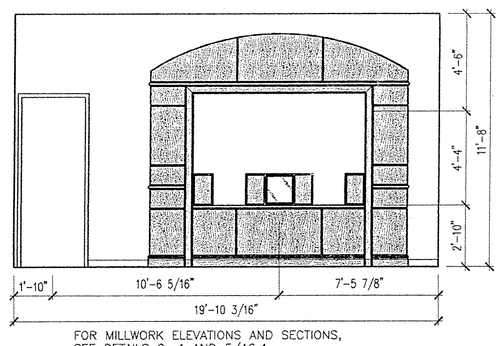

7 A6.2 CUSTOMER SERVICE-126
SCALE: 1/4"=1'-0"

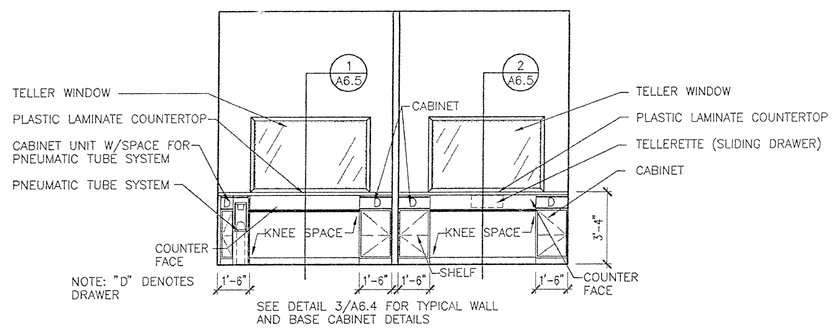

8 A6.2 CUSTOMER SERVICES DRIVE-THRU 120 & 122
SCALE: 1/4"=1'-0"

Stantec Architecture Inc.
4875 Riverside Drive
Macon, Georgia U.S.A.
31210-1117
Tel. 478.474.6100
Fax. 478.476.8373
www.stantec.com

Stantec

Copyright Reserved

The Contractor shall verify and be responsible for all dimensions. DO NOT scale the drawing - any errors or omissions shall be reported to Stantec Architecture Inc. without delay.
The Copyrights to all designs and drawings are the property of Stantec Architecture Inc. Reproduction or use for any purpose other than that authorized by Stantec Architecture Inc. is forbidden.

Consultants

Legend

Notes

Revision	By	Appd.	Date

Issued	By	Appd.	Date
	DTP		05/03/01

File Name: m04a6-2.dwg

Dwn.	Chkd.	Dsgn.	Date

Permit-Seal

STATE OF GEORGIA
DAVID L. RICHARDSON
CERTIFICATE NO. 14,696
REGISTERED ARCHITECT

Client/Project

MULTI-MODAL TRANSPORTATION ADMINISTRATION BUILDING

DOUGLAS COUNTY, GEORGIA

DOUGLASVILLE, GEORGIA U.S.A.

Title

LS PLANS AND ELEVATIONS

Project No. DCO001.000

Scale

Drawing No. A6.2

Sheet 14 of 43

Revision 0

ORIGINAL SHEET - ARCH (24x42) y:\m05\arch\m04a6-2.dwg / PAL plot date: 05/02/2001 by: dmcott

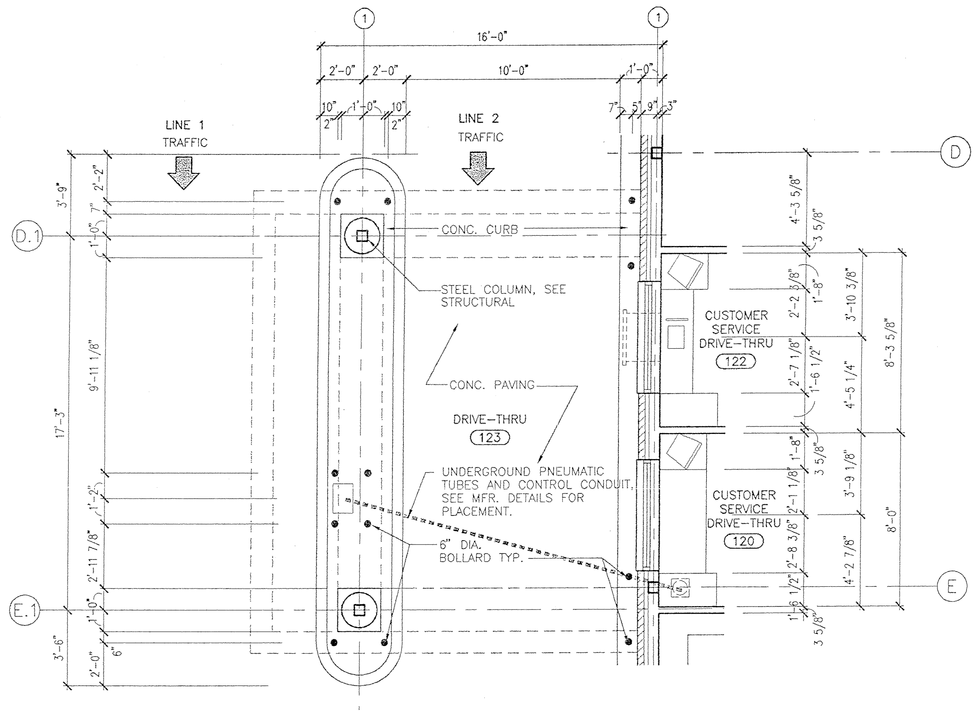

1 A6.3 ENLARGE PLAN – DRIVE THRU
SCALE: 1/4" 1'-0"

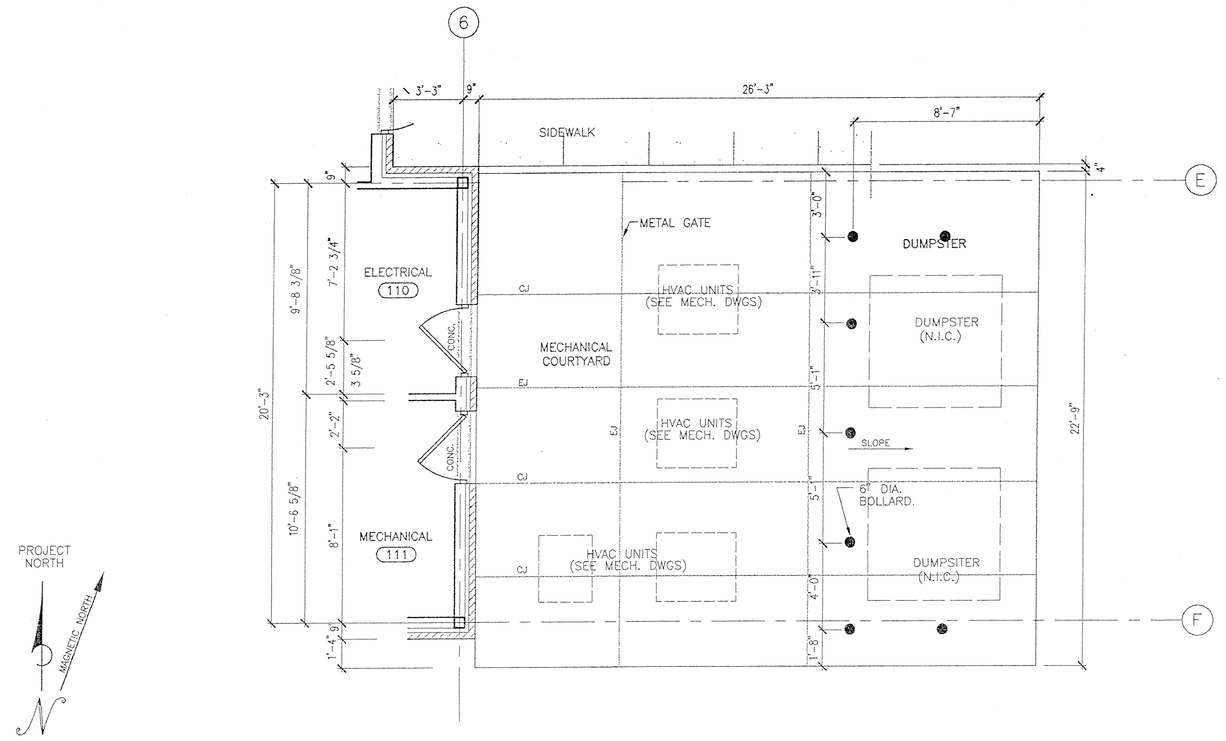

2 A6.3 ENLARGE PLAN – MECHANICAL COURTYARD & DUMPSTER
SCALE: 1/4" 1'-0"

NOTE: SEE SHEET A7.1 FOR SECTIONS AND ELEVATIONS FOR MECHANICAL COURTYARD AND DUMPSTER AREA FOR ALTERNATE

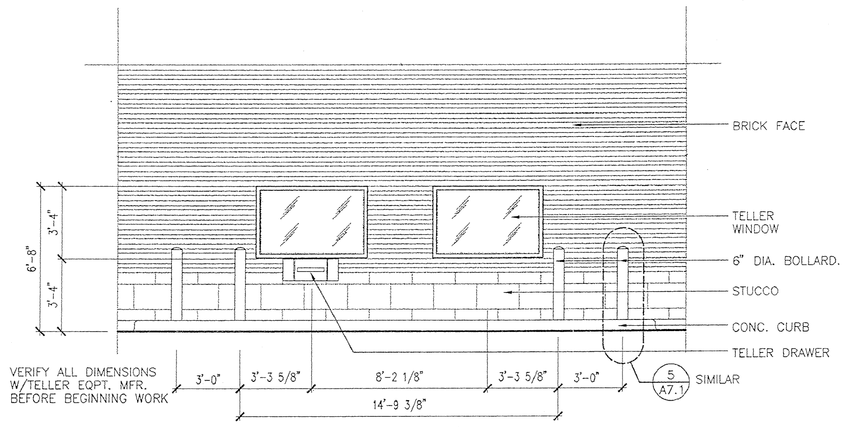

3 A6.3 DRIVE THRU ELEVATION
SCALE: 1/4" 1'-0"

Stantec Architecture Inc.
4875 Riverside Drive
Macon, Georgia U.S.A.
31210-1117
Tel. 478.474.6100
Fax. 478.476.8373
www.stantec.com

Stantec

Copyright Reserved

The Contractor shall verify and be responsible for all dimensions. DO NOT scale the drawing – any errors or omissions shall be reported to Stantec Architecture Inc. without delay.
The Copyrights to all designs and drawings are the property of Stantec Architecture Inc. Reproduction or use for any purpose other than that authorized by Stantec Architecture Inc. is forbidden.

Consultants

Legend

Notes

Revision	By	Appd.	Date

Issued	By	Appd.	Date
	DRR		01/04/01

File Name: m04p6-3.dwg

Dwn.	Chkd.	Dsgn.	Date

Permit-Seal

STATE OF GEORGIA
DAVID L. RICHARDSON
CERTIFICATE NO. 14-
REGISTERED ARCHITECT

Client/Project

MULTI-MODAL TRANSPORTATION ADMINISTRATION BUILDING

DOUGLAS COUNTY, GEORGIA

DOUGLASVILLE, GEORGIA U.S.A.

Title

LS PLANS AND ELEVATIONS

Project No. DCO001.000

Scale

Drawing No. A6.3

Sheet 14 of

Revision 0

ORIGINAL SHEET - ARCH (24x42) U:\staff\jmacey\m04p6-3.dwg / MS
plot date: 02/05/2001 by: Bassett

NOTE: VANITY FABRICATOR SHALL VERIFY THAT LAVATORY TO BE USED WILL FIT WITHIN CABINET DIMENSIONS SHOWN PRIOR TO FABRICATION OF CABINET. SEE PLUMBING SCHEDULE FOR LAVATORY FIXTURE AND FITTINGS.

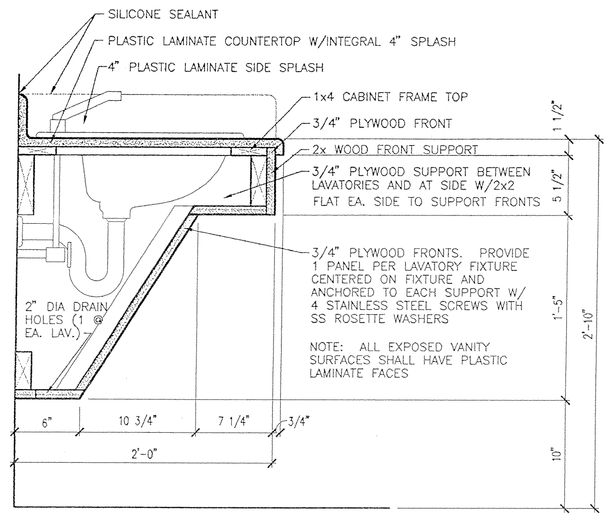

1 A6.4 VANITY SECTION
SCALE: 1 1/2"=1'-0"

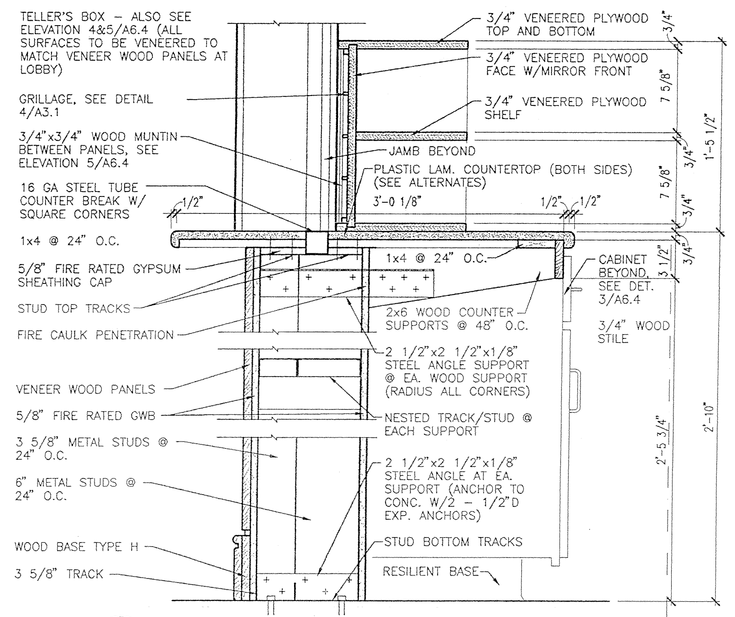

2 A6.4 CUSTOMER SERVICE COUNTER SECTION
SCALE: 1 1/2"=1'-0"

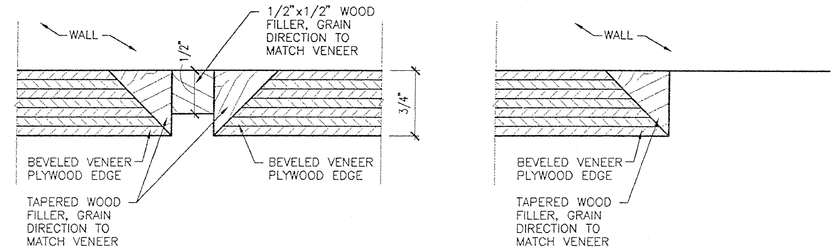

REVEAL DETAIL

PANEL TERMINATION DETAIL

NOTE: ALL NON-CONTINUOUS MOULDINGS SHALL BE MITERED AT 45D AND RETURN TO WALL

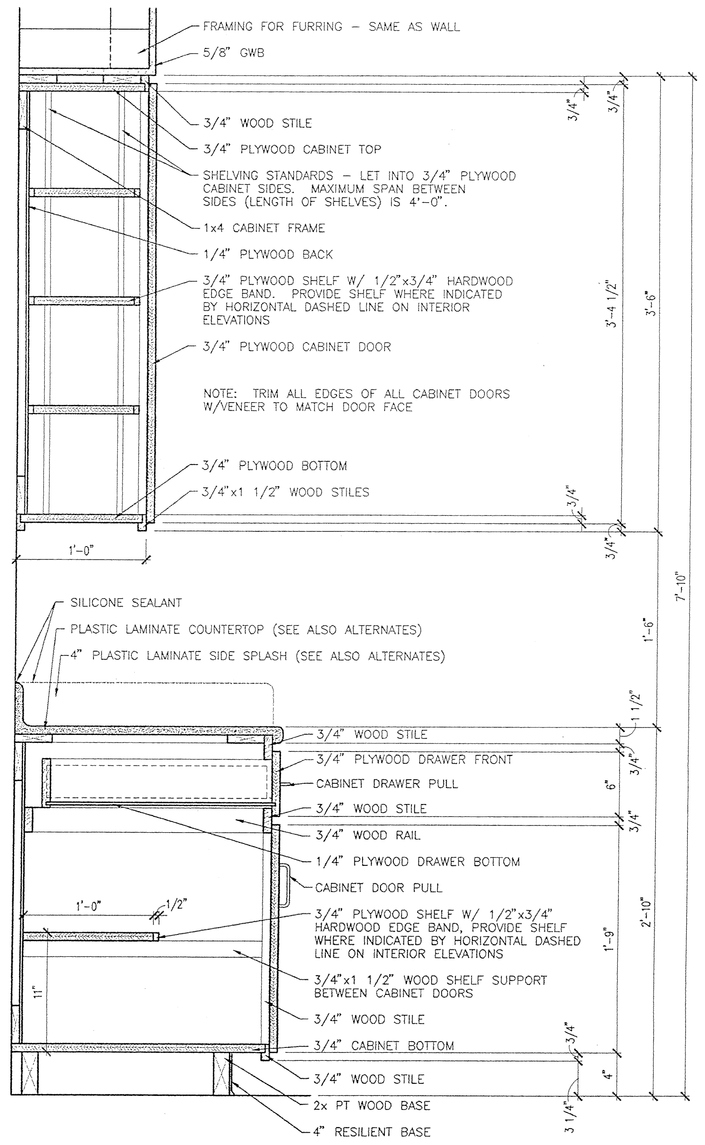

3 A6.4 TYPICAL BASE AND WALL CABINET SECTION
SCALE: 1 1/2"=1'-0"

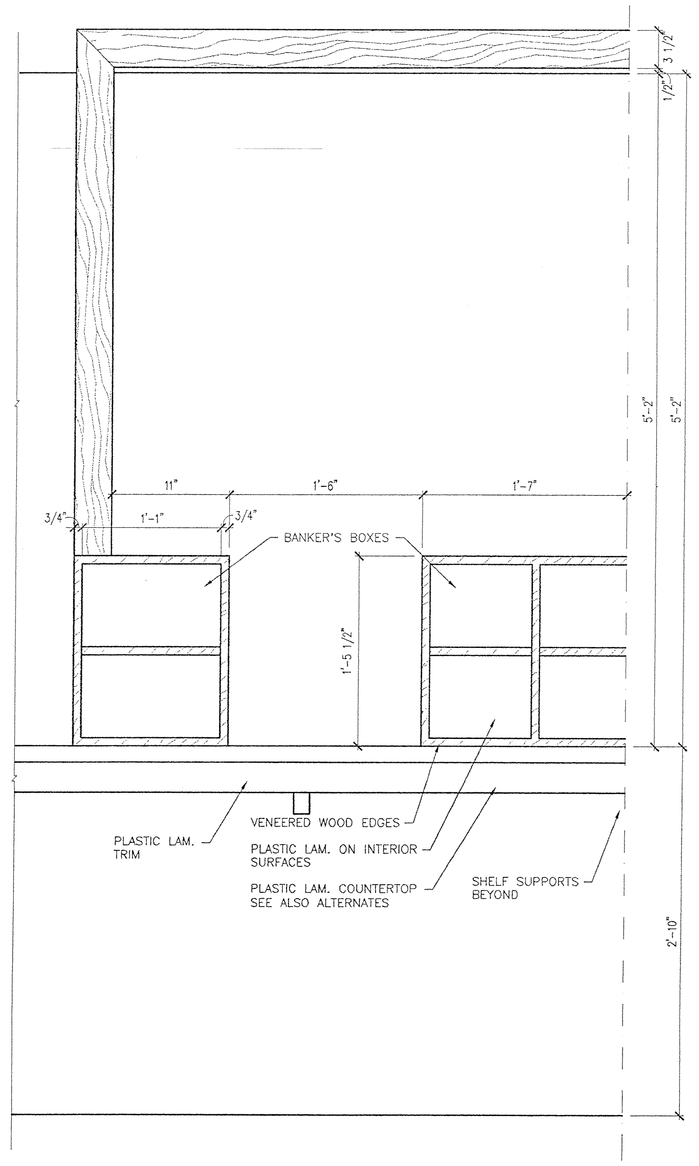

4 A6.4 CUSTOMER SERVICE COUNTER – SERVICE ELEVATION
SCALE: 1 1/2"=1'-0"

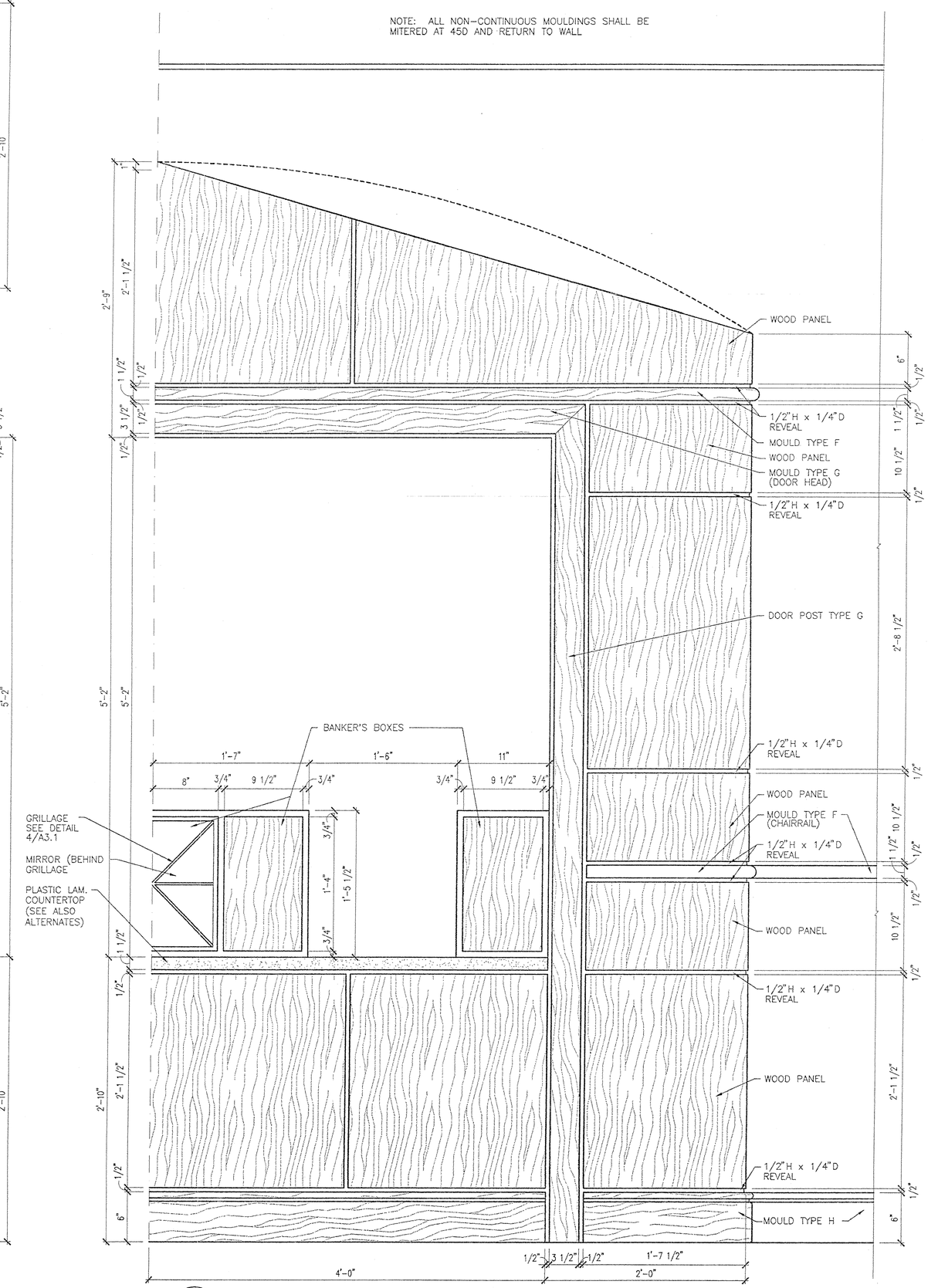

5 A6.4 CUSTOMER SERVICE COUNTER – LOBBY ELEVATION
SCALE: 1 1/2"=1'-0"

NOTE: PROVIDE 1/2"x1/2" TRIM INFILL FOR REVEALS

ALTERNATE NOTE: ALL WOOD PANELLING, TRIM AND REVEALS SHALL BE ADDITIVE ALTERNATE EXCEPT THE FOLLOWING WHICH SHALL BE IN BASE BID: BASE MOULDING, CHAIRRAILS, DOOR POSTS, DOOR HEADS AND BANKERS BOXES.

Stantec Architecture Inc.
4875 Riverside Drive
Macon, Georgia U.S.A.
31210-1117
Tel. 478.474.6100
Fax. 478.476.8373
www.stantec.com

Stantec

Copyright Reserved

The Contractor shall verify and be responsible for all dimensions. DO NOT scale the drawing – any errors or omissions shall be reported to Stantec Architecture Inc. without delay.
The Copyrights to all designs and drawings are the property of Stantec Architecture Inc. Reproduction or use for any purpose other than that authorized by Stantec Architecture Inc. is forbidden.

Consultants

Legend

Notes

Revision	By	Appd.	Date

Issued	By	Appd.	Date
	DRR		05/03/01

File Name: m04a6-4.dwg

Dwn.	Chkd.	Dsgn.	Date

Permit-Seal

STATE OF GEORGIA
DAVID L. RICHARDSON
CERTIFICATE NO. 18
REGISTERED ARCHITECT

Client/Project

MULTI-MODAL TRANSPORTATION ADMINISTRATION BUILDING

DOUGLAS COUNTY, GEORGIA

DOUGLASVILLE, GEORGIA U.S.A.

Title

MILLWORK DETAILS

Project No. DCC001.000

Scale

Drawing No. A6.4

Sheet 4 of 2

Revision 0

ORIGINAL SHEET - ARCH (24x36) g:\arch\drawings\m04a6-4.dwg /8
plot date: 05/02/2001 by: dmccott

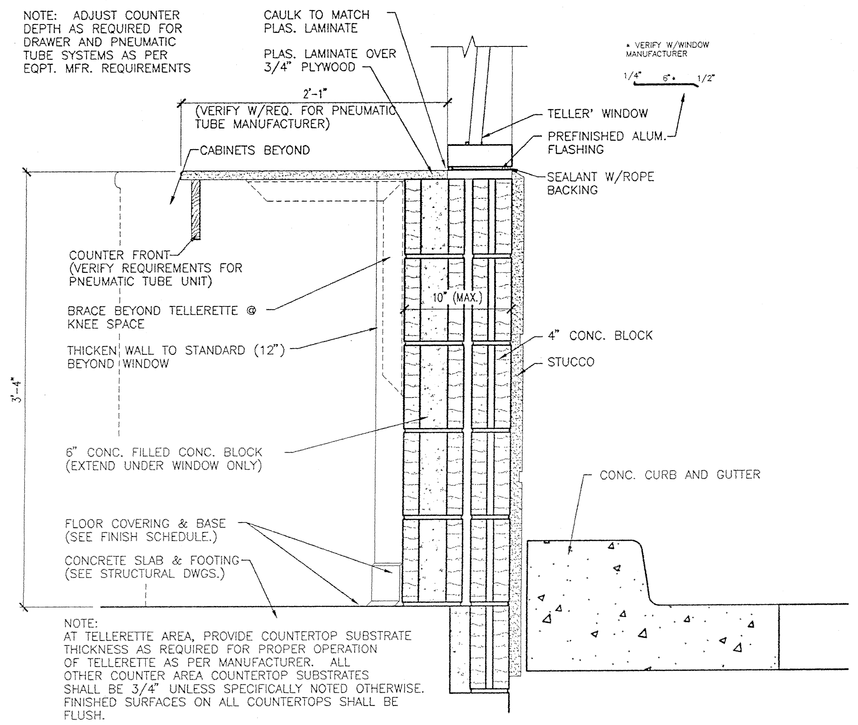

1 / A6.5 MILLWORK @ DRIVE-THRU
SCALE: 1 1/2" = 1'-0"
NOTE: VERIFY ALL DIMENSIONS W/EQPT. MFR. PRIOR TO BEGINNING WORK

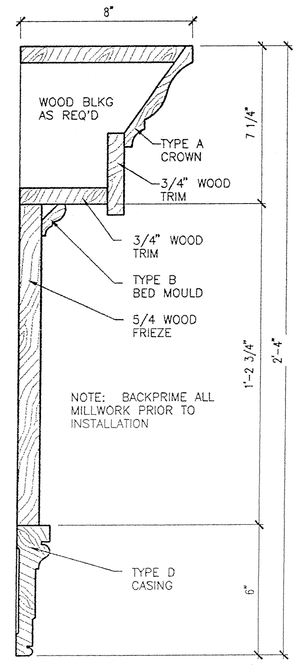

4 / A6.5 MILLWORK @ FRONT ENTRY DOOR
SCALE: 3" = 1'-0"

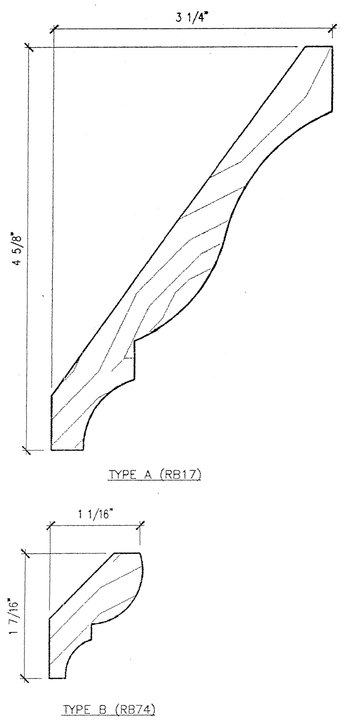

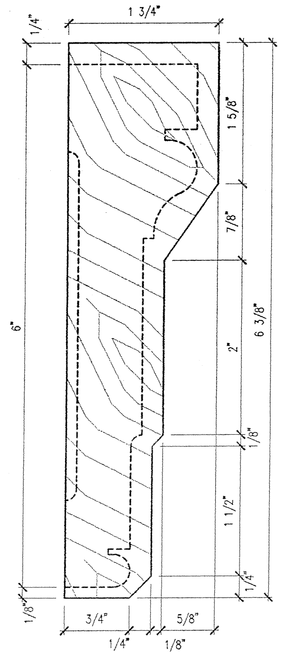

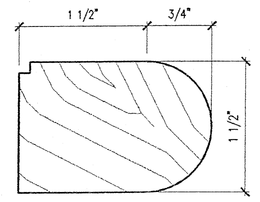

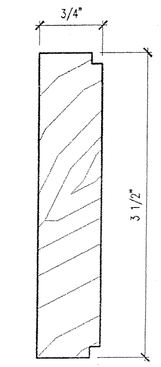

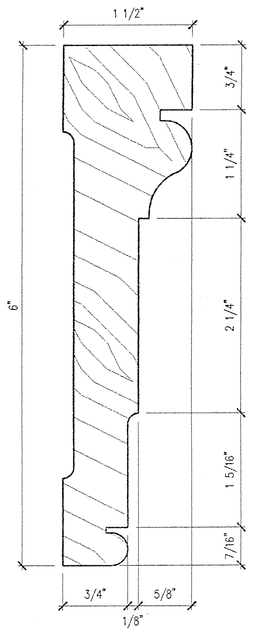

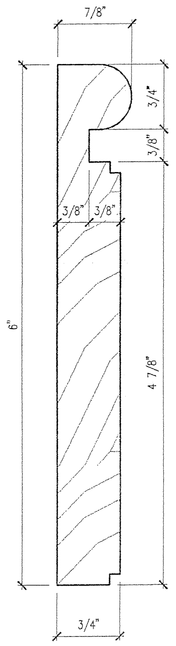

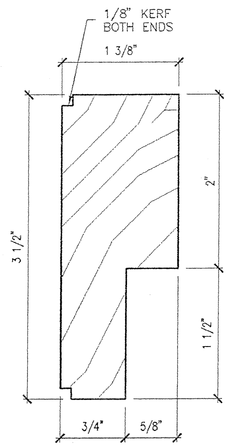

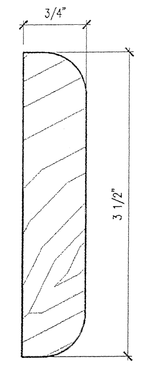

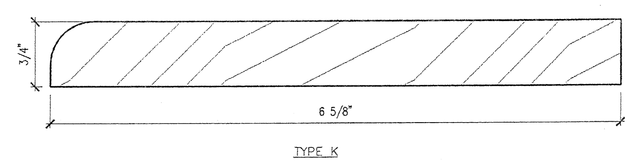

6 / A6.5 WOOD MOULDING DETAILS
SCALE: FULL

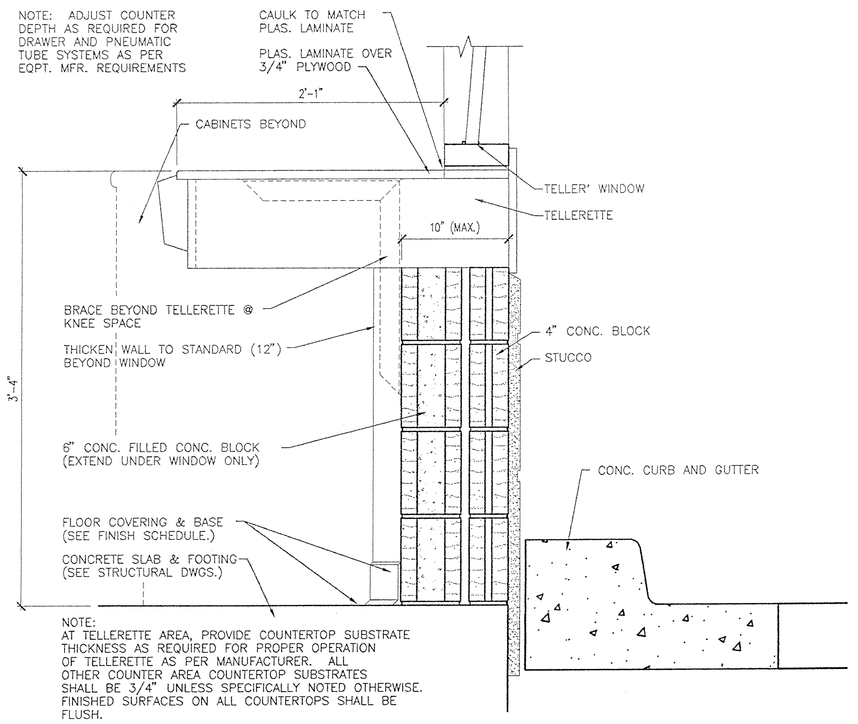

2 / A6.5 MILLWORK @ DRIVE-THRU
SCALE: 1 1/2" = 1'-0"
NOTE: VERIFY ALL DIMENSIONS W/EQPT. MFR. PRIOR TO BEGINNING WORK

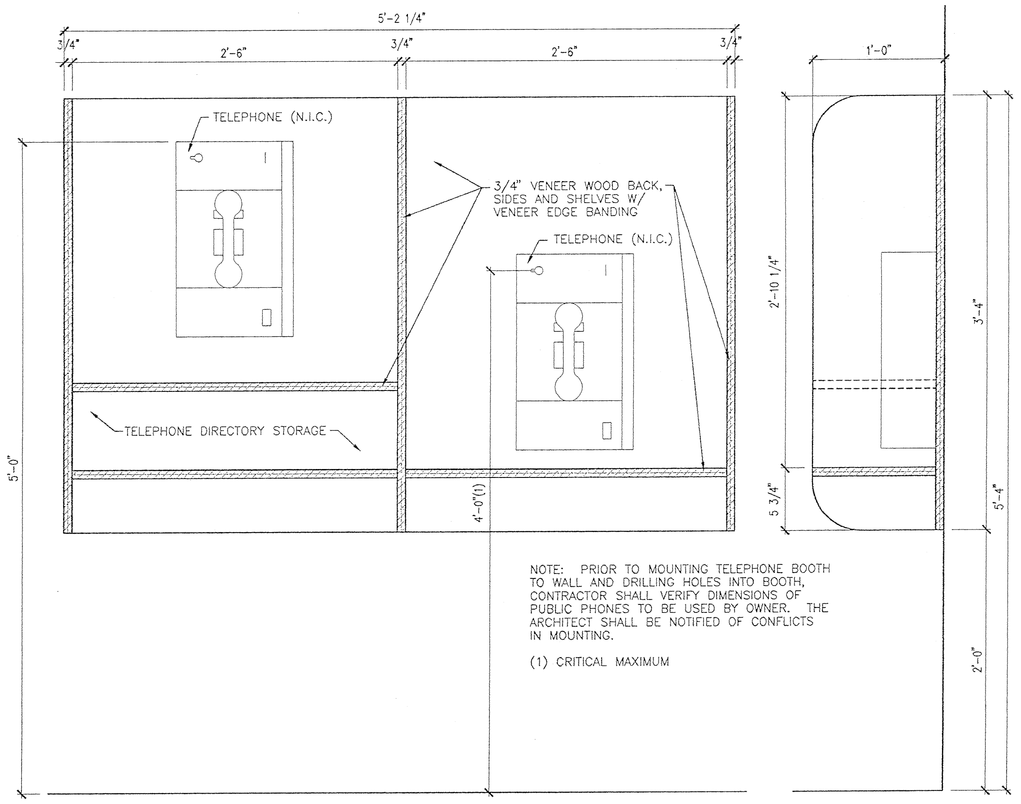

5 / A6.5 WALL MOUNTED TELEPHONE BOOTH
SCALE: 1 1/2" = 1'-0"

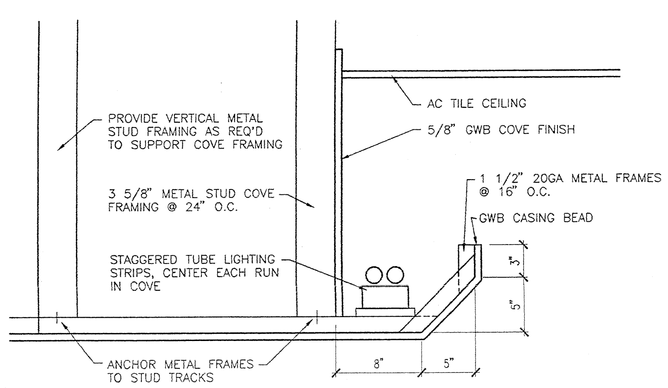

3 / A6.5 COVE DETAIL @ LOBBY
SCALE: 1 1/2"=1'-0"

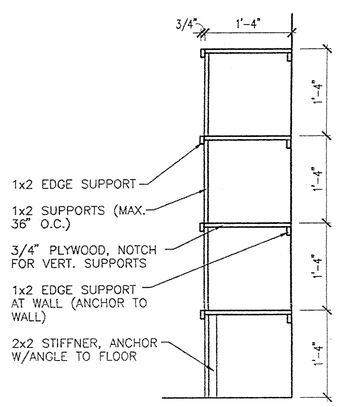

7 / A6.5 SHELVING DETAIL
SCALE: 3/4"=1'-0"

Stantec Architecture Inc.
4875 Riverside Drive
Macon, Georgia U.S.A.
31210-1117
Tel. 478.474.6100
Fax. 478.476.8373
www.stantec.com

Stantec

Copyright Reserved
The Contractor shall verify and be responsible for all dimensions. DO NOT scale the drawing — any errors or omissions shall be reported to Stantec Architecture Inc. without delay.
The Copyrights to all designs and drawings are the property of Stantec Architecture Inc. Reproduction or use for any purpose other than that authorized by Stantec Architecture Inc. is forbidden.

Consultants

Legend

Notes

Revision	By	Appd.	Date

Issued	By	Appd.	Date
	DLR		05/03/01

File Name: m04a6-5.dwg

Dwn.	Chkd.	Dsgn.	Date

Permit-Seal

STATE OF GEORGIA
DAVID L. RICHARDSON
CERTIFICATE NO. 10
REGISTERED ARCHITECT

Client/Project
MULTI-MODAL TRANSPORTATION ADMINISTRATION BUILDING
DOUGLAS COUNTY, GEORGIA
DOUGLASVILLE, GEORGIA U.S.A.

Title
MILLWORK DETAILS

Project No. DCO001.000
Scale
Drawing No. A6.5
Sheet 43 of
Revision 0

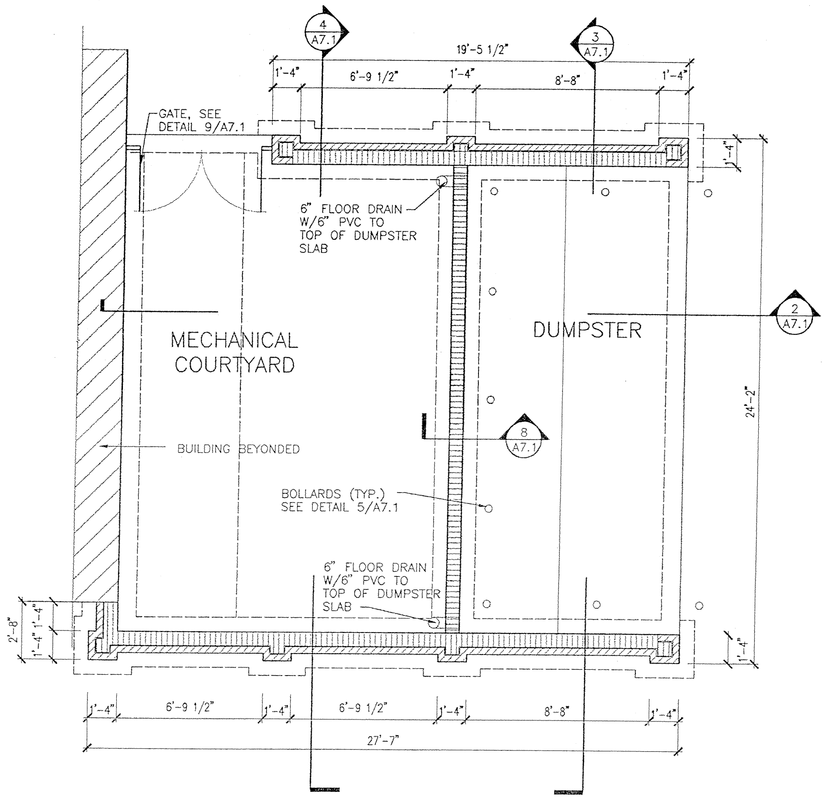

1 A7.1 SECTION
SCALE: 1/4" =1'-0"

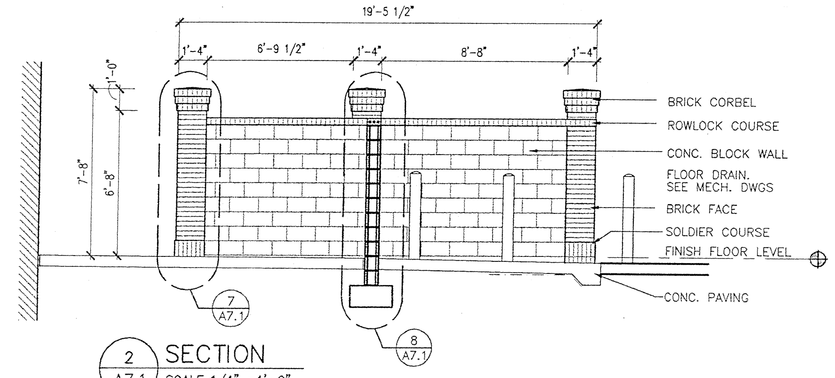

2 A7.1 SECTION
SCALE: 1/4" =1'-0"

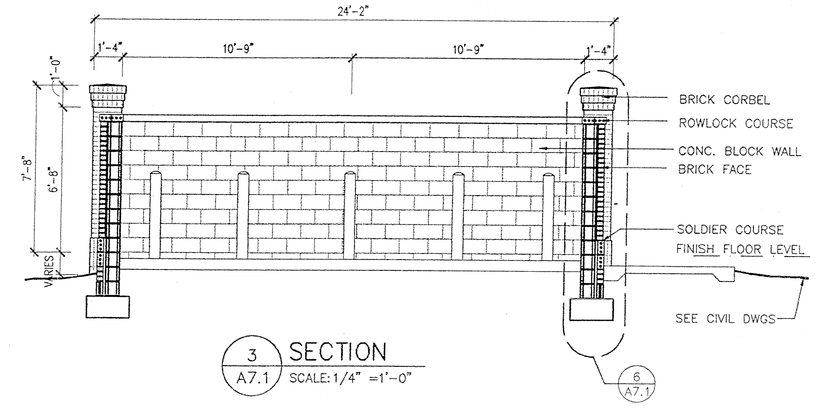

3 A7.1 SECTION
SCALE: 1/4" =1'-0"

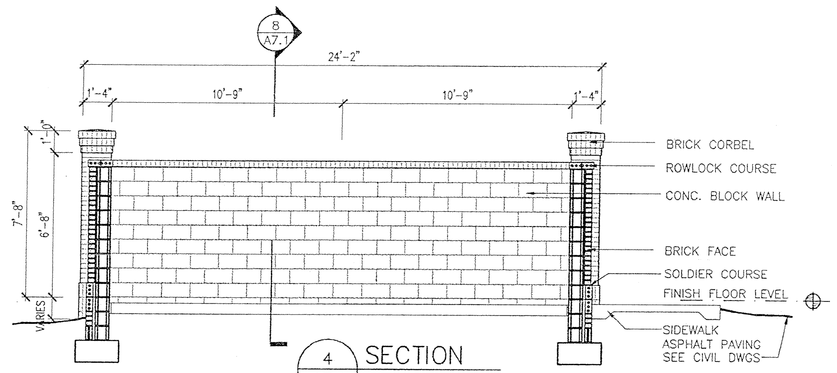

4 A7.1 SECTION
SCALE: 1/4" =1'-0"

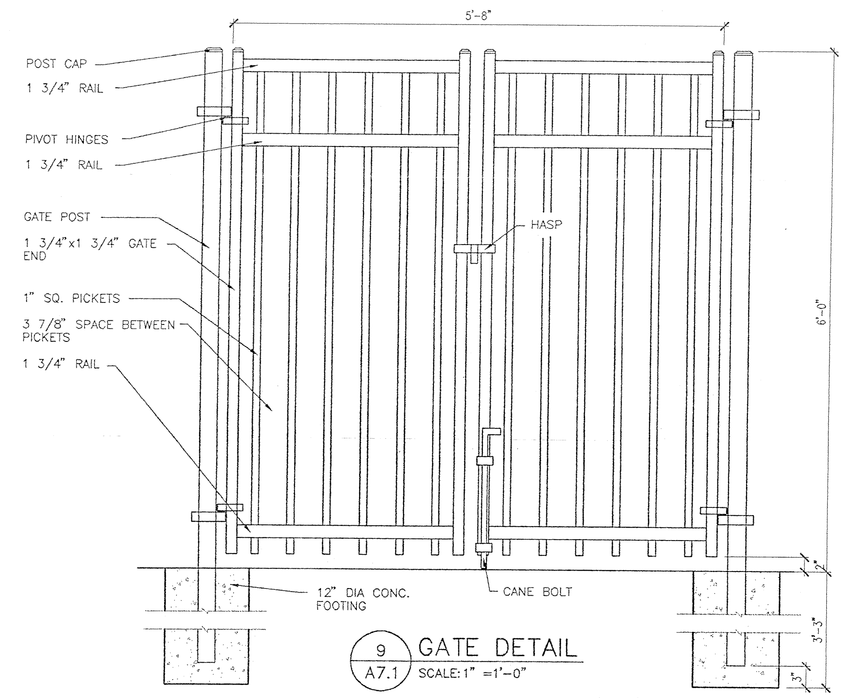

9 A7.1 GATE DETAIL
SCALE: 1" =1'-0"

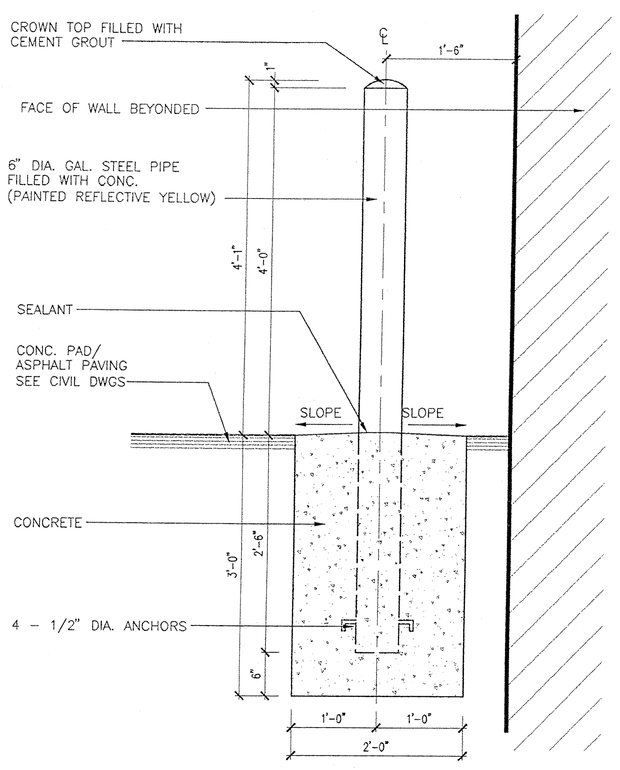

5 A7.1 TYP. PIPE BOLLARD DETAIL
SCALE: 1"=1'-0"

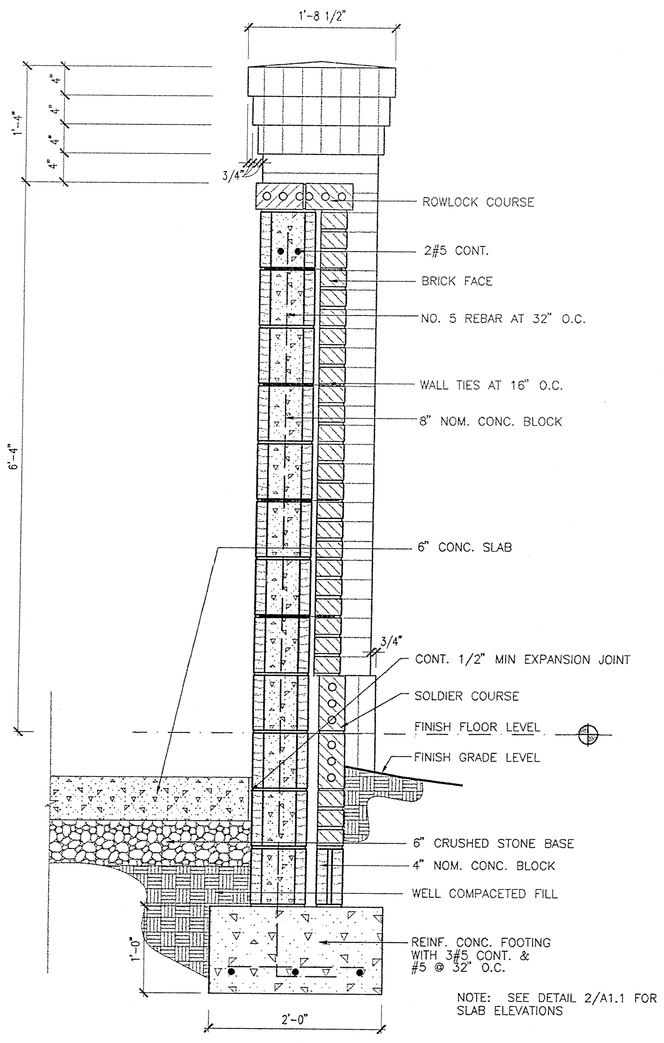

6 A7.1 TYP. WALL SECTION
SCALE: 1" =1'-0"

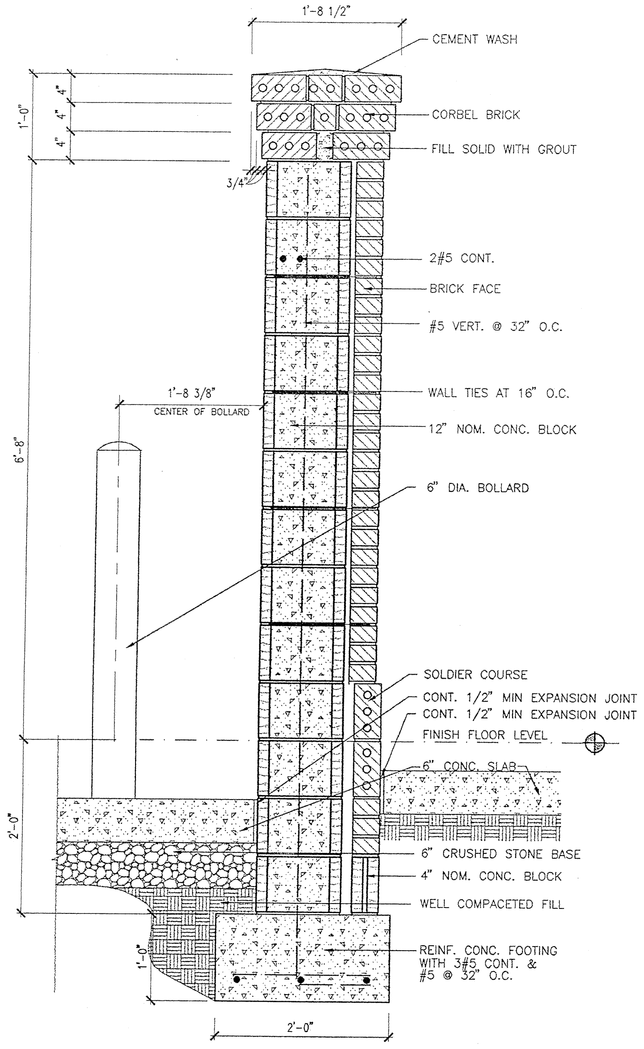

7 A7.1 TYP. COLUMN SECTION
SCALE: 1" =1'-0"

NOTE: PROVIDE HORIZONTAL JOINT REINFORCEMENT @ 16" O.C. IN ALL CMU WALLS.

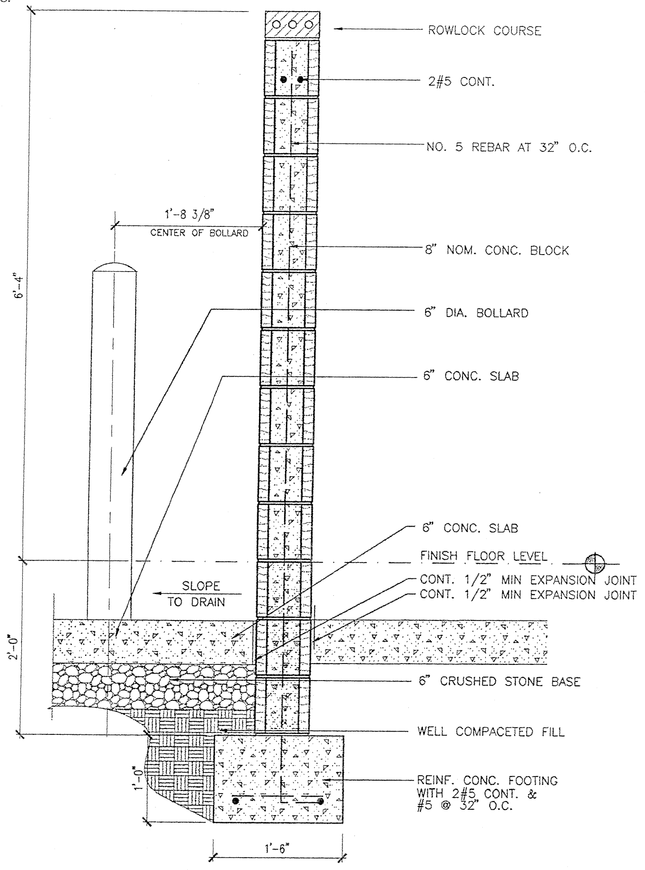

8 A7.1 WALL SECTION
SCALE: 1" =1'-0"

NOTE: ALL DETAILS THIS SHEET REFER TO ADDITIVE ALTERNATE FOR SCREEN WALLS

Stantec Architecture Inc.
4875 Riverside Drive
Macon, Georgia U.S.A.
31210-1117
Tel. 478.474.6100
Fax. 478.476.8373
www.stantec.com

Stantec

Copyright Reserved
The Contractor shall verify and be responsible for all dimensions. DO NOT scale the drawing - any errors or omissions shall be reported to Stantec Architecture Inc. without delay.
The Copyrights to all designs and drawings are the property of Stantec Architecture Inc. Reproduction or use for any purpose other than that authorized by Stantec Architecture Inc. is forbidden.

Consultants

Legend

Notes

Revision	By	Appd.	Date

Issued	By	Appd.	Date
		JDR	05/03/01

File Name: m04a7-1.dwg

Dwn.	Chkd.	Dsgn.	Date

Permit-Seal

STATE OF GEORGIA
DAVID L. RICHARDSON
CERTIFICATE NO. 18891
REGISTERED ARCHITECT

Client/Project

MULTI-MODAL TRANSPORTATION ADMINISTRATION BUILDING

DOUGLAS COUNTY, GEORGIA

DOUGLASVILLE, GEORGIA U.S.A.

Title

DUMPSTER PLAN AND DETAILS

Project No. DCO001.000

Scale

Drawing No. A7.1

Sheet 44 of

Revision 0

ORIGINAL SHEET - ARCH (24x42) G:\Arch\Projects\DCO01-1\dwg\A8 Jul 03, 2001 - 9:26am

LEGEND

EXISTING	DESCRIPTION	PROPOSED
8" SS	SANITARY SEWER W/SIZE	8" SS
CO	CLEANOUT	CO
SS	SANITARY SEWER MANHOLE	SS
24" SD (RCP)	STORM DRAIN PIPE W/SIZE	24" SD (RCP)
SD	STORM DRAIN MANHOLE	SD
	STORM DRAIN DOUBLEWING CATCHBASIN	
	STORM DRAIN SINGLEWING CATCHBASIN	
	STORM DRAIN DROP INLET	
S	STEAM MANHOLE	S
ST	STEAM LINE	ST
UT	UNDERGROUND TELEPHONE	UT
AT	AERIAL TELEPHONE	AT
UE	UNDERGROUND ELECTRIC	UE
UC	UNDERGROUND CABLE	UC
OHE	OVERHEAD ELECTRIC	OHE
CATV	UNDERGROUND CABLE TELEVISION	CATV
ACTV	AERIAL CABLE TELEVISION	ACTV
TC	TOP OF CURB	TC
BC	BOTTOM OF CURB	BC
TBC	TOP BACK OF CURB	TBC
HP	HIGH POINT	HP
	CURB AND GUTTER	
	CURB	
	EDGE OF PAVEMENT	
E	ELECTRIC BOX	E
T	TRAFFIC BOX	T
E	ELECTRIC MANHOLE	E
T	TELEPHONE MANHOLE	T
	STREET LIGHT	
	TRAFFIC SIGNAL POLE	
	OVERHEAD TRAFFIC LIGHT	
	POWER POLE W/GUY WIRE	
	POWER POLE W/LIGHT	
	POWER POLE	
	LIGHT POLE	
W	WATER METER	W
	WATER VALVE	
8"W	WATER MAIN W/SIZE	8"W
	FIRE HYDRANT	
	FREE STANDING SIAMESE CONNECTION	
2"G	GAS MAIN W/SIZE	2"G
G	GAS METER	G
	GAS VALVE	
34" OAK	TREE	34" OAK
X X X X	FENCE LINE	X X X X
960	CONTOUR LINE W/ELEVATION	960
1004.9 +	SPOT ELEVATION	(TOCED) +
B-1	BORING LOCATION	B-1
	REFERENCE/CONTROL POINT W/ COORDINATES & ELEV.	897 N 1000393.57 E 1001437.25 ELEV. 852.76
	CONCRETE	

ABBREVIATIONS

ABAND	ABANDONED	LOC	LOCATION
APPROX	APPROXIMATE	MH	MANHOLE
BRK	BRICK	MAX	MAXIMUM
BLDG	BUILDING	MIN	MINIMUM
BK	BACK	MISC	MISCELLANEOUS
BRG	BEARING	MON	MONUMENT
℄	BASE LINE	MSL	MEAN SEA LEVEL
CB	CATCH BASIN	NTS	NOT TO SCALE
CC	CENTER TO CENTER	NO	NUMBER
CIRCUM	CIRCUMFERENCE	N	NORTH
CL	CLASS	NA	NOT APPLICABLE
C & G	CURB AND GUTTER	OD	OUTSIDE DIAMETER
CO	CLEAN OUT	P	PIPE
COMB	COMBINED	PL	PROPERTY LINE
CONC	CONCRETE	PROP	PROPOSED
CP	CLAY PIPE	PVMT	PAVEMENT
C	CONDUIT	PGL	PROFILE GRADE LINE
CIP	CAST IRON PIPE	PVC	POLYVINYL CHLORIDE
CMP	CORRUGATED METAL PIPE	R	RADIUS
CS	COMBINED SEWER	RC	REINFORCED CONCRETE
℄	CENTER LINE	RCP	REINFORCED CONCRETE PIPE
CULV	CULVERT	RP	REFERENCE POINT
DIAG	DIAGONAL	REQD	REQUIRED
DIA	DIAMETER	REV	REVISED OR REVISION
DWY	DRIVEWAY	RT	RIGHT
DIM	DIMENSION	R/W	RIGHT-OF-WAY
DWG	DRAWING	SD	STORM DRAIN
DIP	DUCTILE IRON PIPE	SEC	SECTION
DI	DROP INLET	SPEC	SPECIFICATION (S)
E/P	EDGE OF PAVEMENT	STM	STEAM
ELEV.	ELEVATION	STL	STEEL
ESMT	EASEMENT	SS	SANITARY SEWER
E	EAST	ST	STREET
EXIST	EXISTING	SHT	SHEET
FC	FACE OF CURB	STA	STATION
FG	FINISHED GRADE	STD	STANDARD
FH	FIRE HYDRANT	SW	SIDEWALK
FF	FINISHED FLOOR	T	TELEPHONE
FL	FLOW LINE	TC	TOP OF CURB
FT	FOOT OR FEET	TCE	TEMPORARY CONSTRUCTION EASEMENT
G	GAS	TEMP	TEMPORARY
GM	GAS METER	TBC	TOP BACK OF CURB
GRT	GRATE	TG	TOP OF GRADE
GV	GAS VALVE	TYP	TYPICAL
HORIZ	HORIZONTAL	UG	UNDERGROUND
HE	HORIZONTAL ELLIPTICAL	UD	UNDERDRAIN
HP	HIGH POINT	VCP	VITRIFIED CLAY PIPE
IN	INCH	VERT	VERTICAL
ID	INSIDE DIAMETER	W	WATER
INV	INVERT	WM	WATER METER
JT	JOINT	WV	WATER VALVE
LT	LEFT	WT	WATER TABLE
LF	LINEAR FEET		

PARKING TABULATION

MINIMUM REQUIRED PARKING = 492 SPACES
MINIMUM PROVIDED PARKING = 597 SPACES
HANDICAP PARKING REQUIRED = 12 SPACES
HANDICAP PARKING PROVIDED = 12 SPACES

LOCATION NOTE:

NO SECTION OF THIS PROPERTY IS LOCATED IN A QUALITY GROWTH DEVELOPMENT DISTRICT.

PHASE 1 CONSTRUCTION SCOPE

1. ALL PAVEMENT, STRUCTURES AND UTILITIES WITHIN THE DELINIATED PHASE 1 AREA SHOWN IN THE CONSTRUCTION DRAWINGS.

2. MASS GRADING OF ENTIRE SITE AND CONSTRUCTION OF BOTH STORMWATER DETENTION FACILITIES.

3. WATER, SANITARY AND GAS MAIN CONSTRUCTION OF PROPOSED BUILDING.

4. STORM DRAINAGE FOR CURRENT PHASE AS DELINATED FOR THIS DRAWING.

5. NO TREES WILL BE PLANTED FOR THIS PHASE.

6. IRRIGATION WILL BE CONSTRUCTED AS PER THE CURRENT AS DELINATED FOR THIS DRAWING.

7. TRANSPORTATION CENTER BUILDING IS INCLUDED FOR THIS PHASE (SEE ARCH. PLANS FOR DETAILS).

REFERENCES

1. BOUNDARY & TOPOGRAPHIC DATA WAS TAKEN FROM AN DIGITAL TOPOGRAPHIC SURVEY FOR DOUGLAS COUNTY BOARD OF COMMISSIONERS BY ARMSTRONG LAND SURVEYING, INC. (770) 577-0077 DATED 2-23-99
2. NO PORTIONS OF THIS PROPERTY LIES WITHIN AE SPECIAL FLOOD HAZARD AREA AS IDENTIFIED ON F.I.R.M. COMMUNITY PANEL NO. 13030605 B, DATED 6-25-82.

CONSTRUCTION NOTES

1. DIRT FOR FILL SHALL BE CLEAN, COHESIVE CLAY OR SANDY CLAY FREE OF DEBRIS, ORGANICS, DELETERIOUS MATERIAL AND ROCKS GREATER THAN 3" DIA.
2. MAX CUT OR FILL SLOPES SHALL BE 2:1 (H:V).
3. EQUIPMENT AND MATERIALS SHALL BE STORED IN AREAS DESIGNATED BY THE OWNER. CONSTRUCTION AND STORAGE AREAS SHALL BE KEPT NEAT AND CLEAN. TREE SAVE AREAS SHALL NOT BE USED FOR STORAGE OR PARKING.
4. ALL CONSTRUCTION MUST CONFORM TO DOUGLAS COUNTY STANDARDS AND SPECIFICATIONS.
5. ALL REINFORCED CONCRETE PIPE (RCP) SHALL BE CLASS III UNLESS OTHERWISE NOTED. CORRUGATED METAL PIPE SHALL BE 16 GA. MIN. AND ASPHALT OR ALUMINUM COATED.
6. ALL MANHOLE TOPS SHALL BE SET FLUSH WITH FINISHED GRADE IN LANDSCAPED AND PAVED AREAS.
7. CONTRACTOR TO VERIFY THE ELEVATIONS OF ALL TIE-IN POINTS FOR INSTALLATION OF UTILITIES, CURB & GUTTER AND PAVING.
8. TRENCH BACKFILL MATERIAL SHALL BE COMPACTED TO NOT LESS THAN 95% OF THE OPTIMUM COMPACTION FOR ANY SOIL CLASSIFICATION AS DETERMINED BY THE STANDARD PROCTOR TEST AASHTO T-180 METHOD "A". BACKFILL MATERIAL SHALL BE CLEAN AND FREE OF ROOTS, ROCK OR DELETERIOUS MATTER. CONTRACTOR SHALL CORRECT ANY DAMAGE TO CURBING OR PAVING CAUSED BY TRENCH SETTLEMENT WHICH OCCURS WITHIN 12 MONTHS OF PROJECT ACCEPTANCE.
9. MANHOLES & DROP INLETS ARE DIMENSIONED TO THE CENTER OF THE RISER. CATCH BASINS ARE DIMENSIONED TO THE CENTER OF THE CATCH BASIN AT THE FACE OF CURB. LAYOUT DIMENSIONS ARE TO FACE OF CURB.
10. THE CONTRACTOR SHALL NOTIFY THE ENGINEER OF ANY DISCREPANCIES BETWEEN PLAN AND FIELD CONDITIONS PROMPTLY UPON DISCOVERY.
11. ALL EXISTING ELECTRICAL BOXES, WATER METER BOXES, AND VALVE BOXES, WHICH ARE TO REMAIN SHALL BE SET FLUSH WITH THE TOP OF THE PROPOSED GRADE.
12. ALL VEGETATION, ROOT SYSTEMS, TOPSOIL, REFUSE AND OTHER DELETERIOUS, NON-SOIL MATERIAL SHALL BE STRIPPED FROM THE PROPOSED CONSTRUCTION AREAS. CLEAN TOPSOIL MAY BE STOCKPILED AND REUSED LATER IN LANDSCAPED AREAS.
13. CRUSHED STONE AGGREGATE IN ROADWAY/PARKING AREA PAVEMENT BASE SHALL CONFORM WITH SECTION 815 OF THE STATE OF GEORGIA, DEPARTMENT OF TRANSPORTATION, STANDARD SPECIFICATIONS FOR ROAD AND BRIDGE CONSTRUCTION. ALL ASPHALT MATERIAL AND PAVING OPERATIONS SHALL MEET APPLICABLE SPECIFICATIONS OF THE ASPHALT INSTITUTE AND GEORGIA DEPARTMENT OF TRANSPORTATION.
14. UPON COMPLETION OF CONSTRUCTION, THE CONTRACTOR SHALL REMOVE ALL SEDIMENT FROM THE DETENTION PONDS AND RESTORE THE PONDS TO THEIR PROPOSED FINISHED GRADE. ALL STORM DRAIN PIPES ARE ALSO TO BE COMPLETELY CLEANED OF ALL SILT AND DEBRIS AT THE COMPLETION OF CONSTRUCTION.
15. CONDUITS FOR SITE LIGHTING SHALL BE INSTALLED, BACKFILLED AND PROPERLY COMPACTED PRIOR TO THE PLACEMENT OF BASE, PAVEMENT, AND CURB & GUTTER.

CLEARING NOTES

1. UTILITY NOTE:
   UTILITIES MAY EXIST WHICH ARE NOT SHOWN ON THE PLANS. THE CONTRACTOR SHALL BE RESPONSIBLE FOR CONTACTING ALL UTILITY COMPANIES HAVING UTILITIES WITHIN OR ADJACENT TO THE WORK AREA. THE CONTRACTOR SHALL HAVE THE UTILITIES FIELD LOCATED AND COORDINATE WITH UTILITY COMPANIES TO HAVE THEM RELOCATED AND/OR ADAPTED FOR THE TIE-INS.
2. DISCONNECT AND SEAL OFF ABANDONED UTILITIES AND UTILITIES TO BE REMOVED PRIOR TO START OF DEMOLITION. UTILITIES SHALL BE DISCONNECTED BELOW EXISTING GRADE OR OUTSIDE OF CONTRACT LIMITS BY THE APPLICABLE PUBLIC UTILITY. ALL COSTS FOR THIS WORK SHALL BE BORNE BY THE CONTRACTOR.
3. ALL STRUCTURES TO BE DEMOLISHED SHALL BE COMPLETELY REMOVED ABOVE AND BELOW GRADE. ABANDONED SERVICE LINES TO THE STRUCTURES SHALL ALSO BE REMOVED.
4. CONTRACTOR SHALL CLEARLY MARK AND MAINTAIN PROPERTY CORNER MONUMENTATION AND BENCHMARKS WHENEVER POSSIBLE AND WILL BE RESPONSIBLE FOR THE COST OF REPLACING THEM IF DISTURBED OR DESTROYED.
5. CONTRACTOR TO PROVIDE ALL NECESSARY BARRICADES, SUFFICIENT LIGHTS, SIGNS AND OTHER TRAFFIC CONTROL MEASURES AS MAY BE NECESSARY FOR THE PROTECTION AND SAFETY OF THE PUBLIC THROUGHOUT DEMOLITION AND CONSTRUCTION IN COMPLIANCE WITH THE "MANUAL ON UNIFORM TRAFFIC CONTROL DEVICES," CURRENT ED. AND GA. D.O.T. SPECIFICATIONS SECTION 150.
6. ALL VEGETATION (UNLESS OTHERWISE NOTED), EXISTING ASPHALT PAVEMENT, ORGANICS AND UNSUITABLE BEARING SOILS SHALL BE STRIPPED FROM THE SURFACE WITHIN THE CONSTRUCTION LIMITS AND DISPOSED OF OFFSITE.
7. PRIOR TO CLEARING, THE CONTRACTOR SHALL OBTAIN WRITTEN VERIFICATION FROM ALL UTILITY COMPANIES THAT ALL UTILITIES HAVE BEEN REMOVED. IF UTILITIES HAVE NOT BEEN REMOVED BUT HAVE BEEN ABANDONED, THE VERIFICATION LETTER SHALL STATE THAT THEIR FACILITIES LEFT ONSITE HAVE BEEN ISOLATED FROM THEIR SOURCE AND MAY BE REMOVED BY THE CONTRACTOR. IF UTILITIES ARE TO REMAIN AND HAVE BEEN LEFT ACTIVE, THE CONTRACTOR SHALL CAREFULLY PROTECT THEM AND IS RESPONSIBLE FOR RESTORING THEM TO THEIR PREVIOUS CONDITION OR BETTER IF DAMAGED.
8. THE CONTRACTOR SHALL LEAVE THE SITE IN A CLEAN AND NEAT CONDITION. ALL DEBRIS, VEGETATION WHICH HAS BEEN REMOVED, LUMBER, CONCRETE, ETC., SHALL BE REMOVED FROM THE SITE AND PROPERLY DISPOSED.
9. CONTRACTOR SHALL HAVE THE LIMITS OF CLEARING AND ALL BUFFERS STAKED WITH FLAGGING STRUNG BETWEEN ANGLE POINTS TO INSURE THE PROPER LOCATION OF TREE SAVE FENCE AND PROPOSED IMPROVEMENTS.

IRRIGATION NOTES:

1. IRRIGATION SYSTEMS ARE NOT ALLOWED WITHIN THE PUBLIC RIGHT OF WAY.
2. IRRIGATION OVERSPRAY ONTO PUBLIC ROADWAYS IS NOT ALLOWED.
3. IRRIGATION SYSTEMS MUST BE SHUT OFF OR OPERATED MANUALLY DURING WINTER MONTHS TO PREVENT UNNECESSARY ICE ON ROADS.

GENERAL NOTES:

1. PROPERTY ADDRESS: DORRIS ROAD
2. OWNER/DEVELOPER: DOUGLAS COUNTY COMMISSIONERS
   8700 HOSPITAL DR
   DOUGLASVILLE GA 30134
   CONTACT: MIKE MCBRIER, P.E.
   PHONE: (770) 318-0313
4. ENGINEER: HDR/WLJORDEN, INC.
   200 NORTH COBB PKWY, SUITE 134
   MARIETTA, GEORGIA 30062
   PHONE: (678) 784-4000
   CONTACT: TODD A. KORN
5. THE PROPERTY IS LOCATED WITHIN LAND LOT 49, 50, 53, 54 1ST. DISTRICT, 5TH. SECTION, DOUGLAS COUNTY, GEORGIA.
6. THE PROPERTY IS 15.18 ACRES IN SIZE. THE PROPOSED USAGE IS A TRANSPORTATION FACILITY. THE APPROXIMATE DISTURBED AREA IS 14.62 ACRES.
7. ALL CONSTRUCTION MUST CONFORM TO DOUGLAS COUNTY STANDARDS AND SPECIFICATIONS, WHETHER OR NOT REVIEW COMMENTS WERE MADE.
8. ALL SILT BARRIERS MUST BE PLACED AS ACCESS IS OBTAINED DURING GRADING. NO GRADING SHALL BE DONE UNTIL SILT BARRIER INSTALLATION AND DETENTION FACILITIES ARE CONSTRUCTED.
9. SILT BARRIERS TO BE PLACED AS SHOWN ON PLANS OR AS DIRECTED BY PROJECT ENGINEER CONTRACTED THROUGH CONSTRUCTION OR DOUGLAS COUNTY ENGINEERING DEPARTMENT.
10. NOTIFY DOUGLAS COUNTY ENGINEER 24 HOURS BEFORE BEGINNING OF EVERY PHASE OF CONSTRUCTION: (678) 297-6209.
11. AS-BUILT DRAWINGS OF ROADWAYS, STORM DRAINS, SEWERS AND WATER; FIELD APPROVALS BY THE INSPECTOR; AND ALL APPLICABLE BONDS ARE REQUIRED PRIOR TO ACCEPTANCE OR ISSUANCE OF A CERTIFICATE OF OCCUPANCY.
12. THIS PROJECT WILL BE SERVED BY PUBLIC GRAVITY SEWER.
13. FOR BENCHMARK AND SURVEY INFORMATION, PLEASE SEE INFORMATION LISTED ELSEWHERE ON THIS SHEET.
14. WATER & SEWER SERVICE TO BE PROVIDED BY DOUGLAS CO.
15. NO PORTIONS OF THE 15.18 ACRE SITE AREA IS WITHIN A FLOOD HAZARD ZONE.
16. PRIOR TO THE ACCEPTANCE AND APPROVAL OF ANY ASPHALTIC CONCRETE BINDER AND/OR TOPPING WHICH IS INSTALLED AND WILL BE MAINTAINED BY DOUGLAS COUNTY, A REPRESENTATIVE OF THIS DEPARTMENT MAY REQUIRE ONE OR ALL OF THE FOLLOWING TESTS: 1. CORING, 2. EXTRACTION, 3. COMPACTION, 4. DENSITY. THE FREQUENCY AND LOCATION OF THESE TESTS WILL BE LEFT TO THE DISCRETION OF THE INSPECTOR.
17. ALL EROSION AND SEDIMENTATION CONTROLS AND TREE PROTECTION MEASURES SHALL BE INSTALLED PRIOR TO GRADING.
18. SIGNING AND STRIPING TO BE PROVIDED BY THE DEVELOPER ACCORDING TO DOUGLAS COUNTY SPECIFICATIONS.
19. OFF STREET PARKING SHALL BE PROVIDED AND MAINTAINED THROUGHOUT CONSTRUCTION.
20. ALL FILL AREAS MUST BE COMPACTED TO A MINIMUM 95% STANDARD PROCTOR.
21. EQUIPMENT AND MATERIALS SHALL BE STORED IN AREAS DESIGNATED BY THE OWNER. CONSTRUCTION AND STORAGE AREAS SHALL BE KEPT NEAT AND CLEAN AT ALL TIMES.
22. ALL CONSTRUCTION VEHICLES SHALL PARK IN AREAS DESIGNATED BY THE OWNER.
23. DIRT FOR FILL SHALL BE CLEAN, COHESIVE CLAY OR SANDY CLAY FREE OF DEBRIS, ORGANICS AND DELETERIOUS MATERIAL.
24. EROSION AND SILTATION CONTROL DEVICES MUST BE INSTALLED PRIOR TO START OF OTHER CONSTRUCTION AND MAINTAINED UNTIL PERMANENT GROUND COVER IS ESTABLISHED.
25. NECESSARY BARRICADES, SUFFICIENT LIGHTS, SIGNS AND OTHER TRAFFIC CONTROL METHODS AS MAY BE NECESSARY FOR THE PROTECTION AND SAFETY OF THE PUBLIC SHALL BE PROVIDED IN ACCORDANCE WITH THE MANUAL ON UNIFORM TRAFFIC CONTROL DEVICES AND MAINTAINED WHEN WORKING IN CLOSE PROXIMITY TO PUBLIC ROADS.
26. THE CONTRACTOR SHALL EXERCISE EXTREME CAUTION WHEN ENTERING MANHOLES, PIPES OR OTHER STRUCTURES SHOWN ON THE PLANS. AT A MINIMUM, THESE PIPES AND STRUCTURES SHALL BE PROPERLY VENTILATED.
27. ALL WASTE FROM DEMOLITION OPERATIONS SHALL BE HAULED OFFSITE AND DISPOSED OF LEGALLY.
28. ALL REVISIONS TO THESE PLANS MUST BE SUBMITTED TO THE DOUGLAS COUNTY DEVELOPMENT SERVICES PRIOR TO CONTINUING CONSTRUCTION.
29. ALL ROOFTOP APPURTENANCES, SATELLITE DISHES AND/OR OTHER COMMUNICATION DEVICES WILL BE SCREENED FROM ALL PUBLIC RIGHTS OF WAY.
30. ALL TEMPORARY AND PERMANENT SIGNS TO BE PERMITTED SEPARATELY.
31. TYPICAL PARKING STALL SIZES (9' X 20' STANDARD, 8' X 16' COMPACT, 13' X 20' HANDICAPED)
32. CONTRACTOR TO MAINTAIN EROSION CONTROL MEASURES UNTIL ALL DISTURBED AREAS HAVE BEEN STABILIZED (AS PER SCS STANDARDS).

SANITARY SEWER NOTES:

1. ALL WASTEWATER PIPE CONSTRUCTION MUST CONFORM TO DOUGLAS COUNTY STANDARDS AND SPECIFICATIONS.
2. COMPACTION OF THE BACK FILL OF ALL TRENCHES SHALL BE COMPACTED TO THE DENSITY OF 96% OF THE THEORETICAL MAXIMUM DENSITY. BACKFILL MATERIAL SHALL BE DENSITY OF FREE FROM ROOTS, STUMPS OR OTHER FOREIGN DEBRIS, AND SHALL BE PLACED AT OR NEAR OPTIMUM MOISTURE. CORRECTION OF ANY TRENCH SETTLEMENT WITHIN A YEAR FROM THE DATE OF APPROVAL WILL BE THE RESPONSIBILITY OF THE CONTRACTOR.
3. CONTRACTOR TO FIELD VERIFY LOCATION AND INVERT ELEVATIONS OF WASTEWATER PIPE FOR CONNECTION TO EXISTING WASTEWATER SYSTEM.
4. NOTIFY INSPECTOR 72 HOURS PRIOR TO CONSTRUCTION.

EROSION CONTROL NOTES:

1. ALL DRAINAGE EASEMENTS MUST BE GRASSED AND RIP RAPPED AS REQUIRED TO CONTROL EROSION.

DATE	REVISION
8-09-01	ADDENDUM 1
4-10-01	ISSUED FOR BID
01-03-01	COUNTY COMMENTS
12-6-00	COUNTY COMMENTS

HDR/WLJorden
ENGINEERS · SURVEYORS · PLANNERS
200 N. COBB PKWY., BLDG 100, STE. 134
MARIETTA, GEORGIA 30062
(678)784-4000 FAX (678)784-4040

GEORGIA REGISTERED NO. 25893 PROFESSIONAL ENGINEER TODD A. KORN

8-9-01

GENERAL NOTES & LEGEND
DOUGLAS COUNTY MULTIMODEL TRANSPORTATION FACILITY

CHECKED BY	
D.E.	
P.M.	
QA/QC	
D.M.	

DATE 7-14-00
SHEET C2.0
FILE NO. 10138-001-217

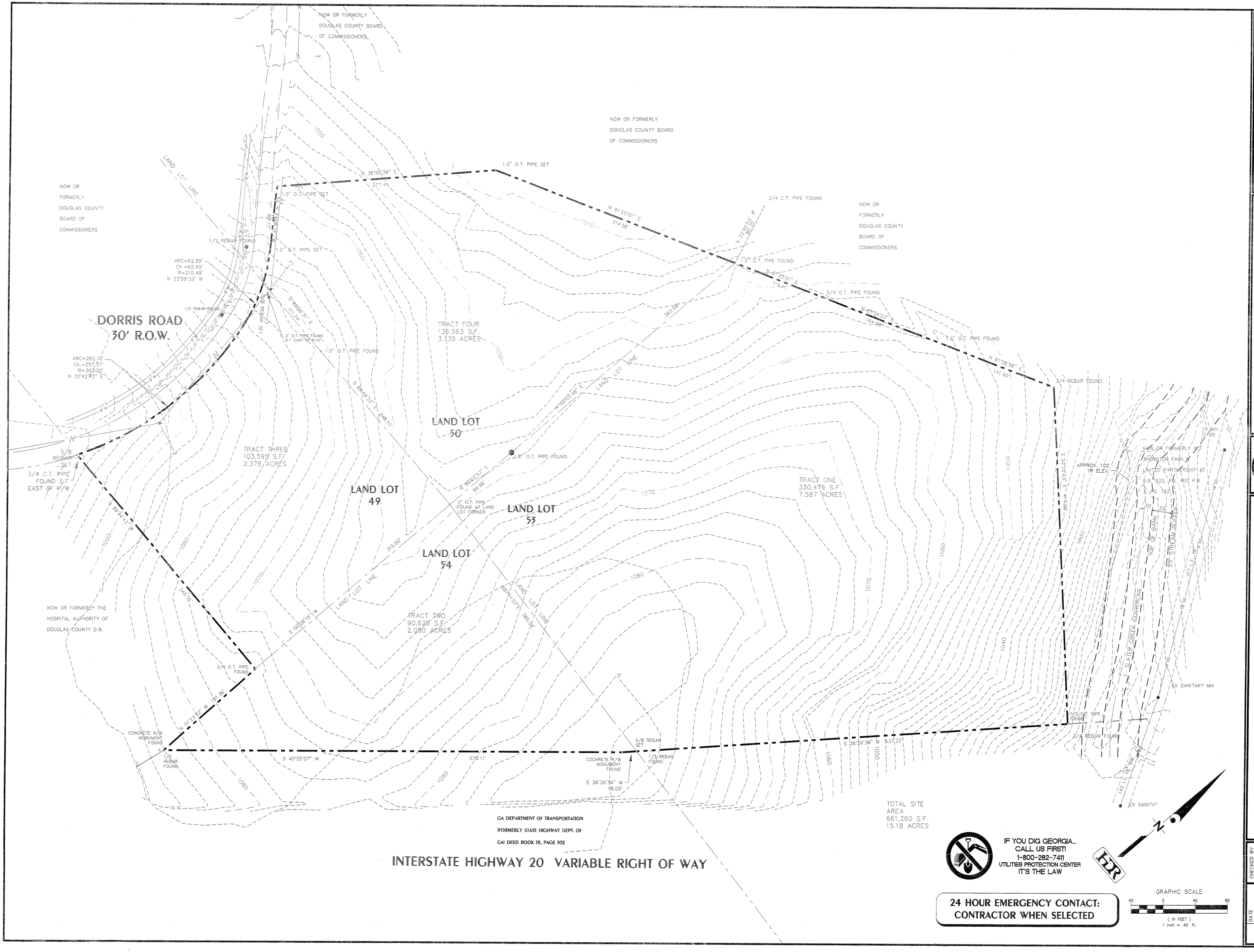

REVISION	DATE
ADDENDUM 2	8-09-01
ISSUED FOR BID	4-10-01
COUNTY COMMENTS	01-03-01
COUNTY COMMENTS	12-6-00

HDR/WLJorden
ENGINEERS SURVEYORS · PLANNERS
200 N. COBB PKWY., BLDG 100, STE. 134
MARIETTA, GEORGIA 30062
(678)784-4000 FAX (678)784-4040

GEORGIA REGISTERED NO. 25893 PROFESSIONAL ENGINEER TODD A. KORN
8-9-01

EXISTING CONDITIONS
DOUGLAS COUNTY MULTI-MODAL TRANSPORTATION CENTER

CHECKED BY	
D.E.	
P.M.	
QA/QC	
D.M.	

DATE 7-14-00
SHEET C3.0
FILE NO. 10138.001

DEMOLITION NOTES:

1. THE PURPOSE OF THIS PLAN IS FOR DEMOLITION ONLY.
2. ALL NECESSARY PERMITS FOR DEMOLITION SHALL BE OBTAINED BY THE CONTRACTOR PRIOR TO BEGINNING WORK.
3. CONTRACTOR SHALL PROTECT ALL ADJACENT LANDS FROM DAMAGE DURING DEMOLITION WORK. ANY OFF-SITE AREAS DISTURBED SHALL BE RETURNED TO A CONDITION EQUAL TO OR BETTER THAN THE EXISTING CONDITION.
4. NO DEMOLITION MATERIALS SHALL BE DISPOSED OF ON-SITE. ALL DEBRIS SHALL BE HAULED OFF-SITE TO A DISPOSAL AREA APPROVED BY THE STATE OF GEORGIA FOR THE HANDLING OF DEMOLITION DEBRIS.
5. ALL STRUCTURES NOT LABELED FOR DEMOLITION SHALL BE PROTECTED FROM DAMAGE DURING ALL PHASES OF CONSTRUCTION. ANY STRUCTURES THAT ARE TO REMAIN THAT ARE DAMAGED SHALL BE REPAIRED BY THE CONTRACTOR TO A CONDITION EQUAL TO OR BETTER THAN THE EXISTING CONDITION AT NO ADDITIONAL COST.
6. CONSTRUCTION ENTRANCE AND SILT FENCE SHALL BE IN PLACE PRIOR TO DEMOLITION OPERATIONS.
7. NECESSARY BARRICADES, SUFFICIENT LIGHTS, SIGNS AND OTHER TRAFFIC CONTROL METHODS AS MAY BE NECESSARY FOR THE PROTECTION AND SAFETY OF THE PUBLIC SHALL BE PROVIDED AND MAINTAINED THROUGHOUT THE LIFE OF THE PROJECT.

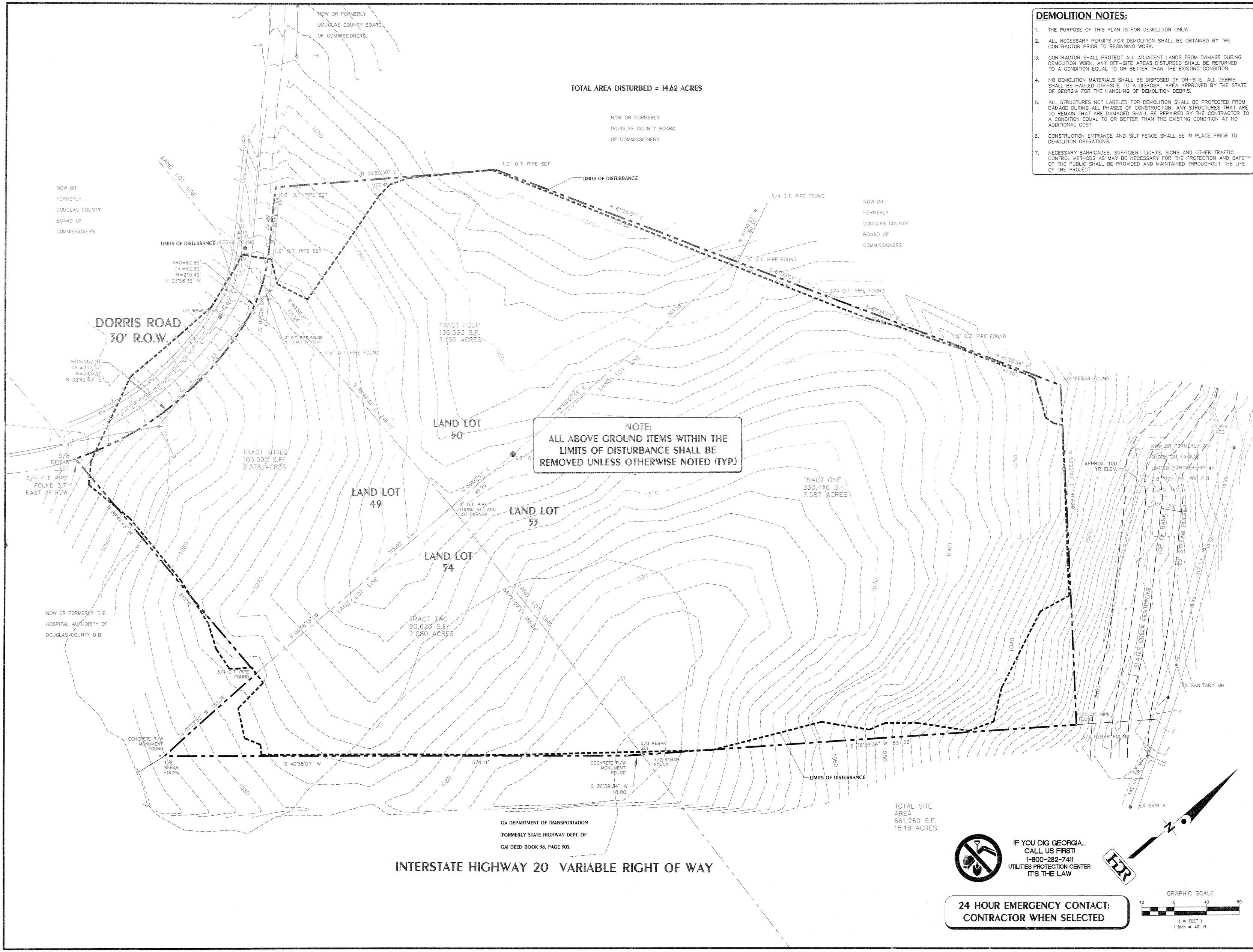

REVISION	DATE
ADDENDUM #1	8-09-01
ISSUED FOR BID	4-10-01
COUNTY COMMENTS	01-03-01
COUNTY COMMENTS	12-6-00

HDR/WLJorden
ENGINEERS SURVEYORS · PLANNERS
200 N. COBB PKWY., BLDG 100, STE. 134
MARIETTA, GEORGIA 30062
(678)794-4000 FAX (678)794-4040

GEORGIA REGISTERED NO. 25896 PROFESSIONAL ENGINEER TODD A. KORN
8-9-01

DEMOLITION PLAN
DOUGLAS COUNTY MULTI-MODAL TRANSPORTATION CENTER

CHECKED BY	
D.E.	
P.M.	
QA/QC	
D.M.	

DATE 7-14-00
SHEET C4.0
FILE NO. 10138.001

EROSION CONTROL DISCLAIMER NOTE

THE EROSION AND SEDIMENT CONTROL MEASURES SHOWN ON THE PLANS REFLECT GENERALLY ACCEPTED PRACTICES IN THE ATLANTA METROPOLITAN AREA. HDR/WLJORDEN, INC. DOES NOT GUARANTEE OR IMPLY THAT THESE MEASURES WILL ENSURE A LESS THAN 25 NTU INCREASE OVER THE TURBIDITY LEVELS IN THE RECEIVING STREAM IMMEDIATELY DOWNSTREAM OF THE PROJECT.

APPROXIMATE ACTIVITY SCHEDULE

ANTICIPATED START DATE: 10-01-01

DESCRIPTION	MONTH 1	2	3	4	5	6	7	8	9	10	11	12
SEDIMENT CONTROL-TREE PROTECTION												
CLEARING & GRUBBING												
GRADING												
TEMPORARY GRASSING												
UTILITY INSTALLATION												
FINAL PAVING												
MAINT. OF EROSION CONTROL DEVICES												
FINAL LANDSCAPING												
DISPOSITION OF SEDIMENT DEVICES												

TOTAL AREA DISTURBED = 14.62 ACRES

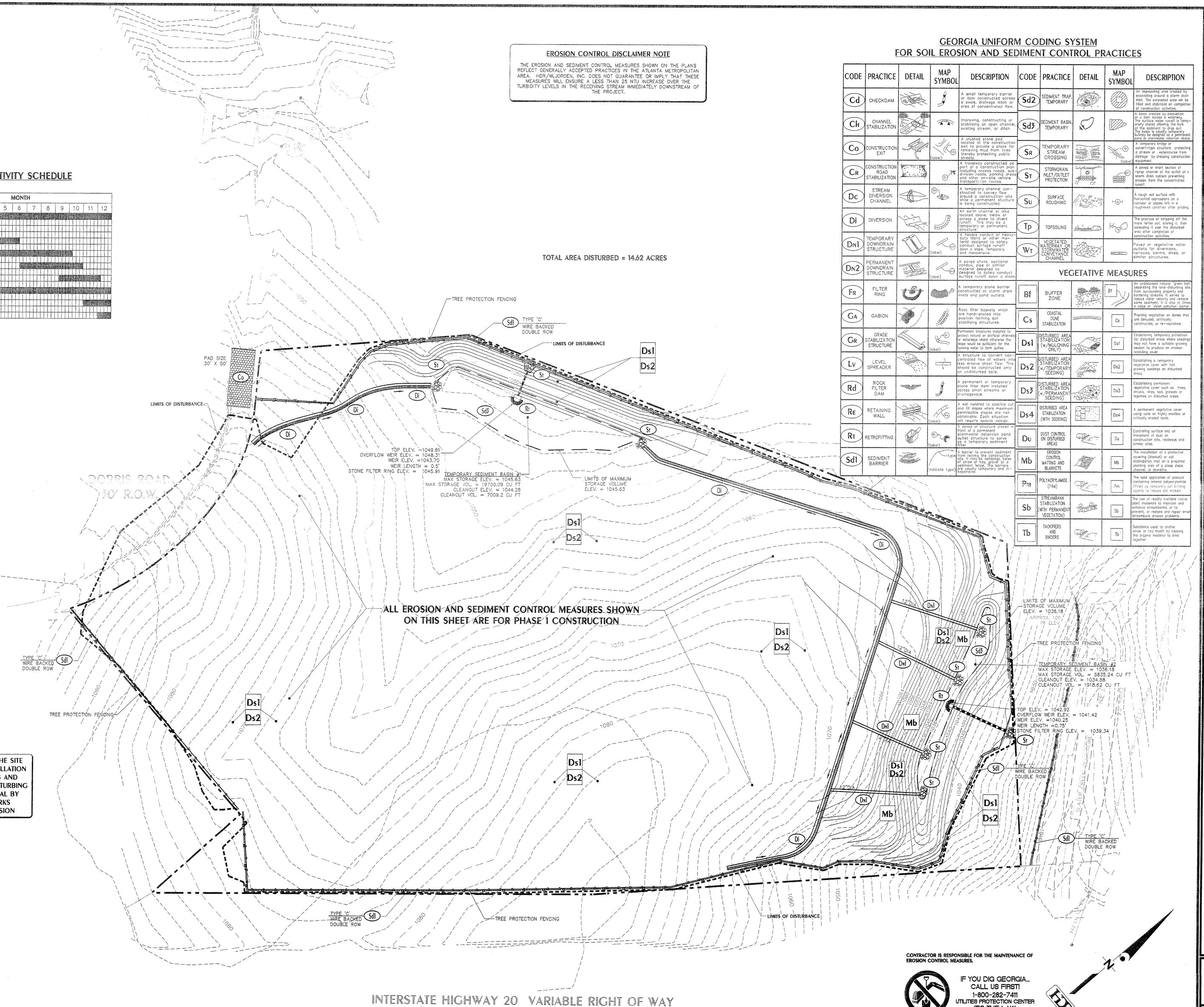

THE ESCAPE OF SEDIMENT FROM THE SITE SHALL BE PREVENTED BY THE INSTALLATION OF EROSION CONTROL MEASURES AND PRACTICES PRIOR TO ANY LAND-DISTURBING ACTIVITIES & INSPECTION/APPROVAL BY DOUGLAS COUNTY PUBLIC WORKS DEPARTMENT, ENGINEERING DIVISION

CONTRACTOR IS RESPONSIBLE FOR THE MAINTENANCE OF EROSION CONTROL MEASURES.

IF YOU DIG GEORGIA... CALL US FIRST! 1-800-282-7411 UTILITIES PROTECTION CENTER IT'S THE LAW

24 HOUR EMERGENCY CONTACT: CONTRACTOR WHEN SELECTED

GRAPHIC SCALE (IN FEET) 1 inch = 40 ft.

GEORGIA UNIFORM CODING SYSTEM FOR SOIL EROSION AND SEDIMENT CONTROL PRACTICES

CODE	PRACTICE	DETAIL	MAP SYMBOL	DESCRIPTION
Cd	CHECKDAM			A small temporary barrier or dam constructed across a swale, drainage ditch or area of concentrated flow.
Ch	CHANNEL STABILIZATION			Improving, constructing or stabilizing an open channel, swalling stream, or ditch.
Co	CONSTRUCTION EXIT		(label)	A crushed stone pad located at the construction exit to provide a place for removing mud from tires thereby protecting public streets.
Cr	CONSTRUCTION ROAD STABILIZATION			A roadway constructed as part of a construction plan including access roads, subdivision roads, parking areas and other on-site vehicle transportation routes.
Dc	STREAM DIVERSION CHANNEL		(Dc)	A temporary channel constructed to convey flow around a construction site, while a permanent structure is being constructed.
Di	DIVERSION			An earth channel or dike located above, below or across a site to divert runoff. This may be a temporary or permanent structure.
Dn1	TEMPORARY DOWNDRAIN STRUCTURE		(label)	A flexible conduit or heavy-duty fabric or other material designed to safely conduct surface runoff down a slope. Temporary and inexpensive.
Dn2	PERMANENT DOWNDRAIN STRUCTURE		(label)	A paved chute, sectional conduit, pipe or similar structure, specifically designed to safely conduct surface runoff down a slope.
Fr	FILTER RING			A temporary stone barrier constructed at storm drain inlets and pond outlets.
Ga	GABION			Rock filter baskets which are hand-placed into position forming soil stabilizing structures.
Gr	GRADE STABILIZATION STRUCTURE		(label)	Permanent structures installed to protect natural or artificial channels or waterways where otherwise the slope would be sufficient for the running water to form gullies.
Lv	LEVEL SPREADER			A structure to convert concentrated flow of waters into less erosive sheet flow. This should be constructed only on undisturbed soils.
Rd	ROCK FILTER DAM			A permanent or temporary stone filter dam installed across small streams or drainageways.
Re	RETAINING WALL		(label)	A wall installed to stabilize cut and fill slopes where maximum permissible slopes are not obtainable. Each situation will require special design.
Rt	RETROFITTING		(label)	A device or structure placed in front of a permanent stormwater detention pond outlet structure to serve as a temporary sediment filter.
Sdl	SEDIMENT BARRIER		(Sdl) (indicate type)	A barrier to prevent sediment from leaving the construction site. It may be sandbags, bales of straw or hay, gravel or a sediment fence. The barriers are inexpensive, temporary and inconspicuous.

CODE	PRACTICE	DETAIL	MAP SYMBOL	DESCRIPTION
Sd2	SEDIMENT TRAP TEMPORARY			An impounding area created by excavating around a storm drain inlet. The excavated area will be filled and stabilized on completion of construction activities.
Sdd	SEDIMENT BASIN TEMPORARY			A basin created by excavation or a dam across a waterway. The surface water runoff is temporarily stored allowing the bulk of the sediment to drop out. The basin is usually temporary. Also called a sediment basin, sediment pond or stormwater detention basin.
Sr	TEMPORARY STREAM CROSSING		(label)	A temporary bridge or culvert-type structure protecting a stream or watercourse from damage by crossing construction equipment.
St	STORMDRAIN INLET/OUTLET PROTECTION			A paved or short section of riprap channel at the outlet of a storm drain system preventing erosion from the concentrated runoff.
Su	SURFACE ROUGHING			A rough soil surface with horizontal depressions on a contour or slopes left in a roughened condition after grading
Tp	TOPSOILING			The practice of stripping off the more fertile soil, storing it, then spreading it over the disturbed area after completion of construction activities.
Wr	VEGETATED WATERWAY OR STORMWATER CONVEYANCE CHANNEL			Paved or vegetative water outlets for diversions, terraces, berms, dikes, or similar structures.

VEGETATIVE MEASURES

CODE	PRACTICE	DETAIL	MAP SYMBOL	DESCRIPTION
Bf	BUFFER ZONE		Bf	An undisturbed natural 'green belt' separating the land-disturbing site from surrounding property and bordering streams. It serves to reduce water velocity and remove some sediment. It is also at times a noise or vision pollution barrier.
Cs	COASTAL DUNE STABILIZATION		Cs	Planting vegetation on dunes that are denuded, artificially constructed, or re-nourished.
Ds1	DISTURBED AREA STABILIZATION (w/MULCHING ONLY)		Ds1	Establishing temporary protection for disturbed areas where seedings may not have a suitable growing season to produce an erosion retarding cover.
Ds2	DISTURBED AREA STABILIZATION (w/TEMPORARY SEEDING)		Ds2	Establishing a temporary vegetative cover with fast growing seedings on disturbed areas.
Ds3	DISTURBED AREA STABILIZATION (w/PERMANENT SEEDING)		Ds3	Establishing permanent vegetative cover such as trees, shrubs, vines, sod, grasses or legumes on disturbed areas.
Ds4	DISTURBED AREA STABILIZATION (WITH SODDING)		Ds4	A permanent vegetative cover using sods on highly erodible or critically eroded lands.
Du	DUST CONTROL ON DISTURBED AREAS		Du	Controlling surface and air movement of dust on construction site, roadways and similar sites.
Mb	EROSION CONTROL MATTING AND BLANKETS		Mb	The installation of a protective covering (blanket) or soil stabilization mat on a prepared planting area of a steep slope, channel, or shoreline.
Pm	POLYACRYLAMIDE (PAM)		Pm	The land application of product containing anionic polyacrylamide (PAM) as temporary soil binding agents to reduce soil erosion.
Sb	STREAMBANK STABILIZATION (WITH PERMANENT VEGETATION)		Sb	The use of readily available native plant materials to maintain and enhance streambanks, or to prevent, or restore and repair small streambank erosion problems.
Tb	TACKIFIERS AND BINDERS		Tb	Substance used to anchor straw or hay mulch by causing the organic material to bind together.

DATE	REVISION
8-09-01	ADDENDUM 2.
4-10-01	ISSUED FOR BID
01-03-01	COUNTY COMMENTS
12-6-00	COUNTY COMMENTS

HDR/WLJorden
ENGINEERS SURVEYORS · PLANNERS
200 N. COBB PKWY., BLDG 100, STE. 154
MARIETTA, GEORGIA 30062
(678)784-4000 FAX (678)784-4040

GEORGIA REGISTERED No. 25893 PROFESSIONAL ENGINEER TODD A. KORN 8-9-01

PHASE I
EROSION CONTROL PLAN
DOUGLAS COUNTY MULTI-MODAL TRANSPORTATION CENTER

CHECKED BY	
D.E.	
P.M.	
QA/QC	
D.M.	
DATE 7-14-00	
SHEET C5.0	
FILE NO. 10138.001	

PHASE I CONSTRUCTION LIMITS

NOW OR FORMERLY DOUGLAS COUNTY BOARD OF COMMISSIONERS

NOW OR FORMERLY DOUGLAS COUNTY BOARD OF COMMISSIONERS

NOW OR FORMERLY DOUGLAS COUNTY BOARD OF COMMISSIONERS

NOW OR FORMERLY DOUGLAS COUNTY BOARD OF COMMISSIONERS

NOW OR FORMERLY THE HOSPITAL AUTHORITY OF DOUGLAS COUNTY D.B.

NOW OR FORMERLY W.T. THORNTON FAMILY LIMITED PARTNERSHIP #2 D.B. 925, PG. 400 P.B. 3, PG. 162

DORRIS ROAD 30' R.O.W.

PHASE I CONSTRUCTION

DETENTION FACILITY

PROPOSED 2' FLUME (SEE DETAIL)

PROPOSED 2' FLUME (TYP)

STAIRS

PROPOSED MODULAR BLOCK RETAINING WALL TO BE DESIGNED BY MANUFACTURER

TEMPORARY 6" HEADER CURB

PROPOSED 2' FLUME

PROPOSED MODULAR BLOCK RETAINING WALL (MANUFACTURER DESIGNED)

END CURB AND GUTTER @ PROPERTY LINE

DUMPSTER PAD (SEE DETAIL)

FUTURE BUS FUELING

PROPOSED CONCRETE SIDEWALK

BUS TRANSFER STATION

CANOPY

PROPOSED CONC. SIDEWALK

H.C. RAMP (TYP.)

FLUSH W/ GUTTER GRADE

DROP OFF LANE

FLUME TO SPILL ON GRADE

1 FT. WIDE CONC. FLUME

PEDESTRIAN CROSSWALK

APPROX. LOCATION OF COMPRESSED NATURAL GAS STATION

FUELING SERVICE BUILDING

FUELING STATION BLDG

LUBE

WASH

PROPOSED MODULAR BLOCK RETAINING WALL (MANUFACTURER DESIGNED)

N28°29'43"W 143.78'

PROPOSED PROPANE 20'x20' TANK PAD

RAMPS AND SIDEWALK NOT TO BE CONSTRUCTED IN PHASE I

PROPOSED 2' FLUME (SEE DETAIL)

PROPOSED CONC. SIDEWALK

PROPOSED HANDICAP RAMP

PROPOSED CONC. SIDEWALK (SEE DETAIL)

PROPOSED STAIRS (SEE DETAIL)

N89°44'43"W 50'

TRANSPORTATION CENTER (SEE ARCH. FOR EXACT DIMS.)

VAN TRANSFER

PROPOSED 3' FLUME

2' FLUME

FLUME TO SPILL ON GRADE

TEMPORARY 6" HEADER CURB

S40°19'50"E 15.60'

N34°47'07"E 470.85'

PROPOSED MODULAR BLOCK RETAINING WALL TO BE DESIGNED BY MANUFACTURER

2' FLUME @ BOTTOM OF FLUME

1' FLUME @ TOP OF WALL

2" HIGH x 4" WIDE CURB

PROPOSED DUMPSTER PAD

SEE ARCHITECTURAL FOR DUMPSTER AREA AND BUILDING ENTRANCE AREAS

DUMPSTER PAD (SEE DETAIL)

PHASE I CONSTRUCTION

GA DEPARTMENT OF TRANSPORTATION (FORMERLY STATE HIGHWAY DEPT. OF GA) DEED BOOK 78, PAGE 302

INTERSTATE HIGHWAY 20 VARIABLE RIGHT OF WAY

PARKING TABULATION

MINIMUM REQUIRED PARKING = 492 SPACES
MINIMUM PROVIDED PARKING = 597 SPACES
HANDICAP PARKING REQUIRED = 12 SPACES
HANDICAP PARKING PROVIDED = 12 SPACES

PAVING LEGEND

- NORMAL DUTY PAVING
- HEAVY DUTY PAVING
- LIGHT DUTY CONCRETE
- HEAVY DUTY CONCRETE

1

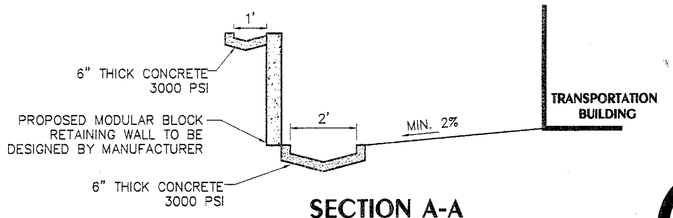

SECTION A-A
CONCRETE FLUME SECTION
NOT TO SCALE

IF YOU DIG GEORGIA... CALL US FIRST! 1-800-282-7411 UTILITIES PROTECTION CENTER IT'S THE LAW

24 HOUR EMERGENCY CONTACT: CONTRACTOR WHEN SELECTED

GRAPHIC SCALE
40 0 40 80
(IN FEET)
1 inch = 40 ft.

REVISION	DATE
ADDENDUM 1	
ISSUED FOR BID	8-09-01
COUNTY COMMENTS	4-10-01
COUNTY COMMENTS	03-03-01
COUNTY COMMENTS	07-14-00

HDR/WLJorden
ENGINEERS SURVEYORS PLANNERS
200 N. COBB PKWY., BLDG 100, STE. 134
MARIETTA, GEORGIA 30062
(678)784-4000 FAX (678)784-4040

GEORGIA REGISTERED NO. 25893 PROFESSIONAL ENGINEER TODD A. KOPPA

SITE PLAN
DOUGLAS COUNTY MULTI-MODAL TRANSPORTATION CENTER

CHECKED BY: D.E. P.M. QA/QC D.M.

DATE 7-14-00
SHEET C6.0
FILE NO. 10138.001

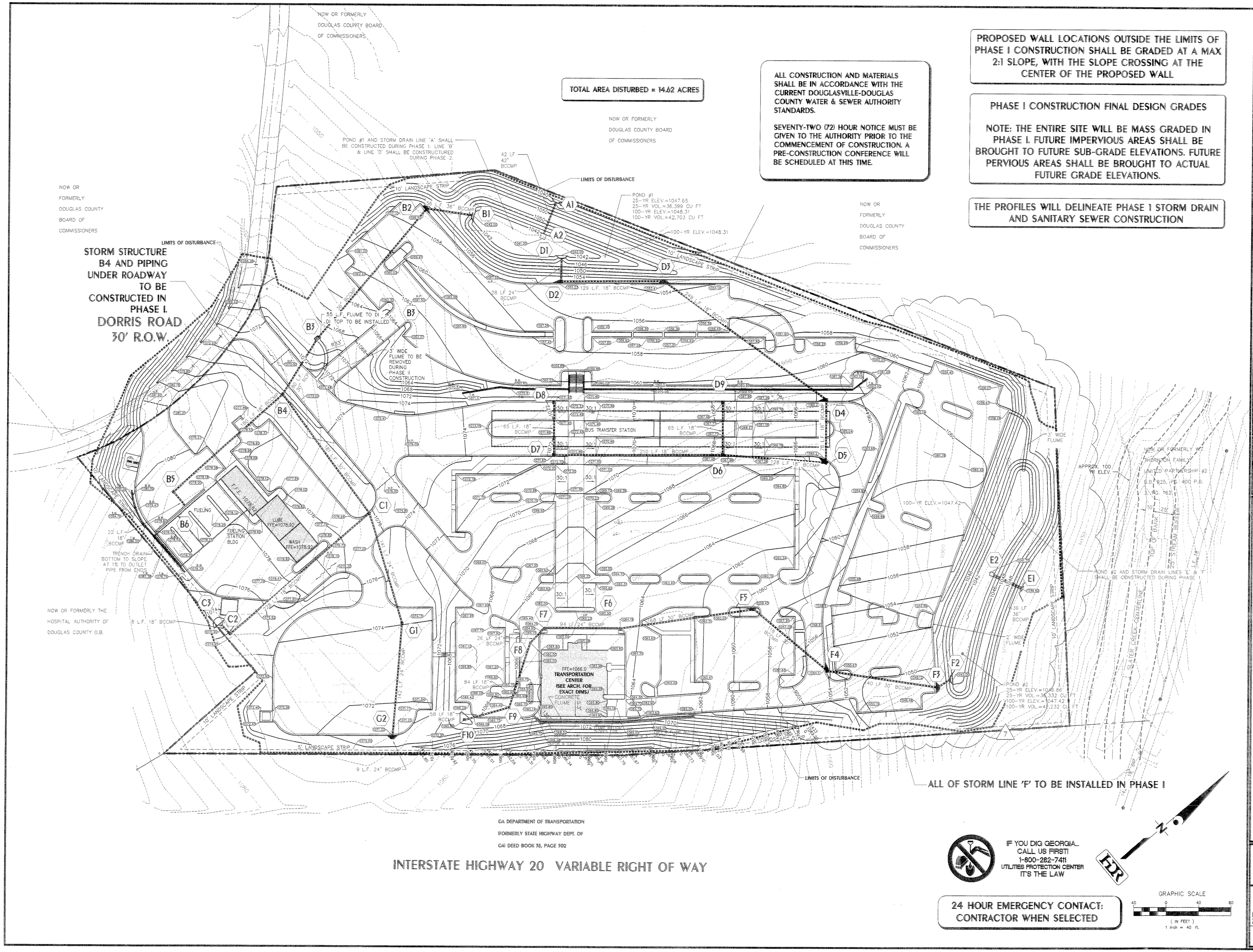

DATE	REVISION
4-9-02	SITE REVISIONS
4-3-02	RFI REVISIONS
3-4-02	ADDENDUM REVISIONS
8-09-01	ADDENDUM 1
4-10-01	ISSUED FOR BID
01-03-01	COUNTY COMMENTS
12-6-00	COUNTY COMMENTS

HDR/WLJorden
ENGINEERS SURVEYORS · PLANNERS
200 N. COBB PKWY., BLDG 100, STE. 134
MARIETTA, GEORGIA 30062
(678)784-4000 FAX (678)784-4040

GEORGIA REGISTERED NO. 25893 PROFESSIONAL ENGINEER TODD A. KORN
5-10-02

GRADING & DRAINAGE PLAN
DOUGLAS COUNTY MULTI-MODAL TRANSPORTATION CENTER

CHECKED BY	
D.E.	
P.M.	
QA/QC	
D.M.	

DATE 7-14-00
SHEET C7.0
FILE NO. 10138.001

EROSION CONTROL DISCLAIMER NOTE

THE EROSION AND SEDIMENT CONTROL MEASURES SHOWN ON THE PLANS REFLECT GENERALLY ACCEPTED PRACTICES IN THE ATLANTA METROPOLITAN AREA. HDR/WLJORDEN, INC. DOES NOT GUARANTEE OR IMPLY THAT THESE MEASURES WILL ENSURE A LESS THAN 25 NTU INCREASE OVER THE TURBIDITY LEVELS IN THE RECEIVING STREAM IMMEDIATELY DOWNSTREAM OF THE PROJECT.

DOWNDRAINS AND DIVERSIONS SHALL BE PLACED ALONG TEMPORARY SLOPES WHERE FUTURE WALLS ARE TO BE CONSTRUCTED.

PHASE I CONSTRUCTION LIMITS

TOTAL AREA DISTURBED = 14.62 ACRES

NOTE: ALL Dn1 PIPE TO BE 12" DIA

APPROXIMATE ACTIVITY SCHEDULE

ANTICIPATED START DATE: 10-01-01

DESCRIPTION	MONTH 1	2	3	4	5	6	7	8	9	10	11	12
SEDIMENT CONTROL-TREE PROTECTION												
CLEARING & GRUBBING												
GRADING												
TEMPORARY GRASSING												
UTILITY INSTALLATION												
FINAL PAVING												
MAINT. OF EROSION CONTROL DEVICES												
FINAL LANDSCAPING												
DISPOSITION OF SEDIMENT DEVICES												

GEORGIA UNIFORM CODING SYSTEM FOR SOIL EROSION AND SEDIMENT CONTROL PRACTICES

CODE	PRACTICE	DETAIL	MAP SYMBOL	DESCRIPTION
Cd	CHECKDAM			A small temporary barrier or dam constructed across a swale, drainage ditch or area of concentrated flow.
Ch	CHANNEL STABILIZATION			Improving, constructing or stabilizing an open channel, existing stream, or ditch.
Co	CONSTRUCTION EXIT		(label)	A crushed stone pad located at a construction exit to provide a place for removing mud from tires thereby protecting public streets.
Cr	CONSTRUCTION ROAD STABILIZATION			A roadway constructed as part of a construction plan including access roads, subdivision roads, parking areas and other on-site vehicle transportation routes.
Dc	STREAM DIVERSION CHANNEL			A temporary channel constructed around a stream around a construction site while a permanent structure is being constructed.
Di	DIVERSION			An earth channel or dike located above, below or across a slope to divert runoff. This may be a temporary or permanent structure.
Dn1	TEMPORARY DOWNDRAIN STRUCTURE		(label)	A flexible conduit of heavy-duty fabric or other material designed to safely conduct surface runoff down a slope. Temporary and inexpensive.
Dn2	PERMANENT DOWNDRAIN STRUCTURE		(label)	A paved chute, sectional conduit, pipe or similar material designed to safely conduct surface runoff down a slope.
Fr	FILTER RING			A temporary stone barrier constructed at storm drain inlets and pond outlets.
Ga	GABION			Rock filter baskets which are hand-placed into position forming soil stabilizing structures.
Gr	GRADE STABILIZATION STRUCTURE		(label)	Permanent structures installed to protect natural or artificial channels or waterways where otherwise the slope would be sufficient for the running water to form gullies.
Lv	LEVEL SPREADER			A structure to convert concentrated flow of waters into less erosive sheet flow. This should be constructed only on undisturbed soils.
Rd	ROCK FILTER DAM			A permanent or temporary stone filter dam installed across small streams or drainageways.
Re	RETAINING WALL		(label)	A wall installed to stabilize cut and fill slopes where maximum permissible slopes are not obtainable. Each situation will require special design.
Rt	RETROFITTING		(label)	A device or structure placed in front of a permanent stormwater detention pond outlet structure to serve as a temporary sediment filter.
Sd1	SEDIMENT BARRIER		(indicate type)	A barrier to prevent sediment from leaving the construction site. It may be sandbags, bales of straw or hay, gravel, or a sediment fence. The barriers are usually temporary and inexpensive.
Sd2	SEDIMENT TRAP, TEMPORARY			An impounding area created by excavating around a storm drain inlet. The excavated area will be filled and stabilized on completion of construction activities.
Sd3	SEDIMENT BASIN, TEMPORARY			A basin created by excavation and/or by a dam across a swale. The surface water runoff is temporarily stored allowing the bulk of the sediment to drop out. The basin is usually temporary but may be designed as a permanent pond or stormwater retention device.
Sr	TEMPORARY STREAM CROSSING		(label)	A temporary bridge or culvert-type structure protecting a stream or watercourse from damage by crossing construction equipment.
St	STORMDRAIN INLET/OUTLET PROTECTION			A paved or short section of riprap channel at the outlet of a storm drain system preventing erosion from the concentrated runoff.
Su	SURFACE ROUGHING			A rough soil surface with horizontal depressions on a contour or slopes left in a roughened condition after grading.
Tp	TOPSOILING			The practice of stripping off the more fertile soil, storing it, then spreading it over the disturbed area after completion of construction activities.
Wt	VEGETATED WATERWAY OR STORMWATER CONVEYANCE CHANNEL			Paved or vegetative water outlets for diversions, terraces, berms, dikes, or similar structures.
	VEGETATIVE MEASURES			
Bf	BUFFER ZONE		Bf	An undisturbed natural "green belt" separating the land-disturbing site from surrounding property and bordering streams. It serves to reduce water velocity and remove some sediment. It is also at times a noise or "visual pollution" barrier.
Cs	COASTAL DUNE STABILIZATION		Cs	Planting vegetation on dunes that are denuded, artificially constructed, or re-nourished.
Ds1	DISTURBED AREA STABILIZATION (w/MULCHING ONLY)		Ds1	Establishing temporary protection for disturbed areas where seedings may not have a suitable growing season to produce an erosion retarding cover.
Ds2	DISTURBED AREA STABILIZATION (w/TEMPORARY SEEDING)		Ds2	Establishing a temporary vegetative cover with fast growing seedings on disturbed areas.
Ds3	DISTURBED AREA STABILIZATION (w/PERMANENT SEEDING)		Ds3	Establishing permanent vegetative cover such as trees, shrubs, vines, sod, grasses or legumes on disturbed areas.
Ds4	DISTURBED AREA STABILIZATION (WITH SODDING)		Ds4	A permanent vegetative cover using sods on highly erodible or critically eroded lands.
Du	DUST CONTROL ON DISTURBED AREAS		Du	Controlling surface and air movement of dust on construction site, roadways and similar sites.
Mb	EROSION CONTROL MATTING AND BLANKETS		Mb	The installation of a protective covering (blanket) or soil stabilization mat on a prepared planting area of a steep slope, channel, or shoreline.
Pm	POLYACRYLAMIDE (PAM)		Pm	The land application of product containing anionic polyacrylamide (PAM) as temporary soil binding agents to reduce soil erosion.
Sb	STREAMBANK STABILIZATION (WITH PERMANENT VEGETATION)		Sb	The use of readily available native plant materials to maintain and enhance streambanks, or to prevent, or restore and repair small streambank erosion problems.
Tb	TACKIFIERS AND BINDERS		Tb	Substance used to anchor straw or hay mulch by causing the organic material to bind together.

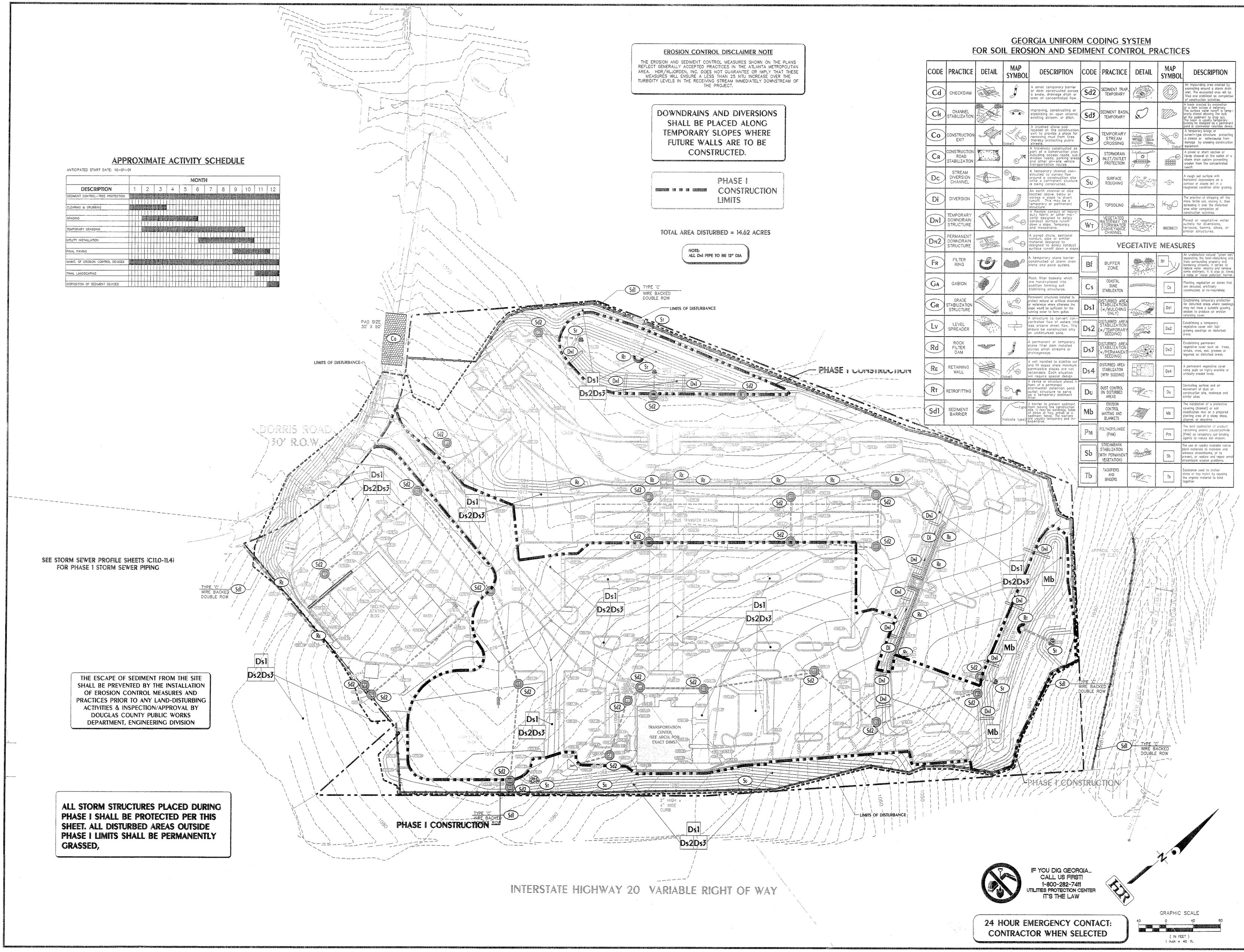

SEE STORM SEWER PROFILE SHEETS (C11.0-11.4) FOR PHASE I STORM SEWER PIPING

THE ESCAPE OF SEDIMENT FROM THE SITE SHALL BE PREVENTED BY THE INSTALLATION OF EROSION CONTROL MEASURES AND PRACTICES PRIOR TO ANY LAND-DISTURBING ACTIVITIES & INSPECTION/APPROVAL BY DOUGLAS COUNTY PUBLIC WORKS DEPARTMENT, ENGINEERING DIVISION

ALL STORM STRUCTURES PLACED DURING PHASE I SHALL BE PROTECTED PER THIS SHEET. ALL DISTURBED AREAS OUTSIDE PHASE I LIMITS SHALL BE PERMANENTLY GRASSED,

IF YOU DIG GEORGIA... CALL US FIRST! 1-800-282-7411 UTILITIES PROTECTION CENTER IT'S THE LAW

24 HOUR EMERGENCY CONTACT: CONTRACTOR WHEN SELECTED

GRAPHIC SCALE (IN FEET) 1 inch = 40 ft.

REVISION	DATE
ADDENDUM 2	
ISSUED FOR BID	8-09-01
COUNTY COMMENTS	4-10-01
COUNTY COMMENTS	01-03-01
COUNTY COMMENTS	12-6-00

HDR/WLJorden
ENGINEERS SURVEYORS PLANNERS
200 N. COBB PKWY., BLDG 100, STE. 134
MARIETTA, GEORGIA 30062
(770)784-4000 FAX (770)784-4040

GEORGIA REGISTERED NO. 26893 PROFESSIONAL ENGINEER TODD A. KORN

PHASE II EROSION CONTROL PLAN DOUGLAS COUNTY MULTI-MODAL TRANSPORTATION CENTER

CHECKED BY	
D.E.	
P.M.	
QA/QC	
D.M.	

DATE 7-14-00

SHEET C8.0

FILE NO. 10138.001

FIRE FLOW TEST RESULTS

TEST DATE:	9-6-01
STATIC PRESSURE	108 P.S.I.
RESIDUAL PRESSURE	99 P.S.I.
FIRE HYDRANT FLOW	1,332 @ 63 P.S.I. G.P.M.
AVAILABLE FLOW @ 20 p.s.i	4,562 G.P.M.
SIZE OF WATER MAIN	8" (DETERMINED)

THE RESULTS ARE FOR THE TEST PERFORMED BY DOUGLASVILLE-DOUGLAS COUNTY WATER AND SEWER AUTHORITY FOR THE FIRE HYDRANT BEING SUPPLIED BY AN 8" WATER LINE LOCATED ON THE SOUTH SIDE OF PROFESSIONAL PARKWAY. THE FLOW HYDRANT WAS LOCATED AT THE END OF PROFESSIONAL PARKWAY AND THE CHART HYDRANT WAS LOCATED APPROXIMATELY 400' WEST OF FLOW HYDRANT IN FRONT OF 6095 PROFESSIONAL PARKWAY.

ALL WATER MAINS AND SANITARY SEWER CONSTRUCTION SHALL CONFORM TO DOUGLASVILLE-DOUGLAS COUNTY WSA STANDARDS AND SPECIFICATIONS, LATEST EDITION.

NOTIFY THE DOUGLASVILLE-DOUGLAS COUNTY WSA ENGINEERING DEPARTMENT AT LEAST 72 HOURS PRIOR TO BEGINNING OF CONSTRUCTION ON WATER AND SEWER. AN INSPECTOR WILL BE ASSIGNED AND A PRE-CONSTRUCTION MEETING SCHEDULED AT THIS TIME.

AS-BUILT DRAWINGS SHALL BE FIELD VERIFIED AND STAMPED BY A REGISTERED ENGINEER OR LAND SURVEYOR.

ALL CONTRACTORS FOR WATER AND SEWER CONSTRUCTION SHALL BE ON THE DOUGLASVILLE-DOUGLAS COUNTY WSA APPROVED CONTRACTORS LIST. CONTACT THE WSA ENGINEERING DEPARTMENT FOR APPLICATIONS.

CONTRACTORS HAVE THE RESPONSIBILTY TO ENSURE EROSION CONTROL OF SEWER EASEMENTS, PARTICULARLY WHEN SEWER EASEMENTS ARE IN CLOSE PROXIMITY OF DRAINAGE EASEMENTS. SEE THE ASSIGNED DOUGLASVILLE-DOUGLAS COUNTY WSA INSPECTOR FOR DETAILS.

MINIMUM WATER LINE COVER = 4'

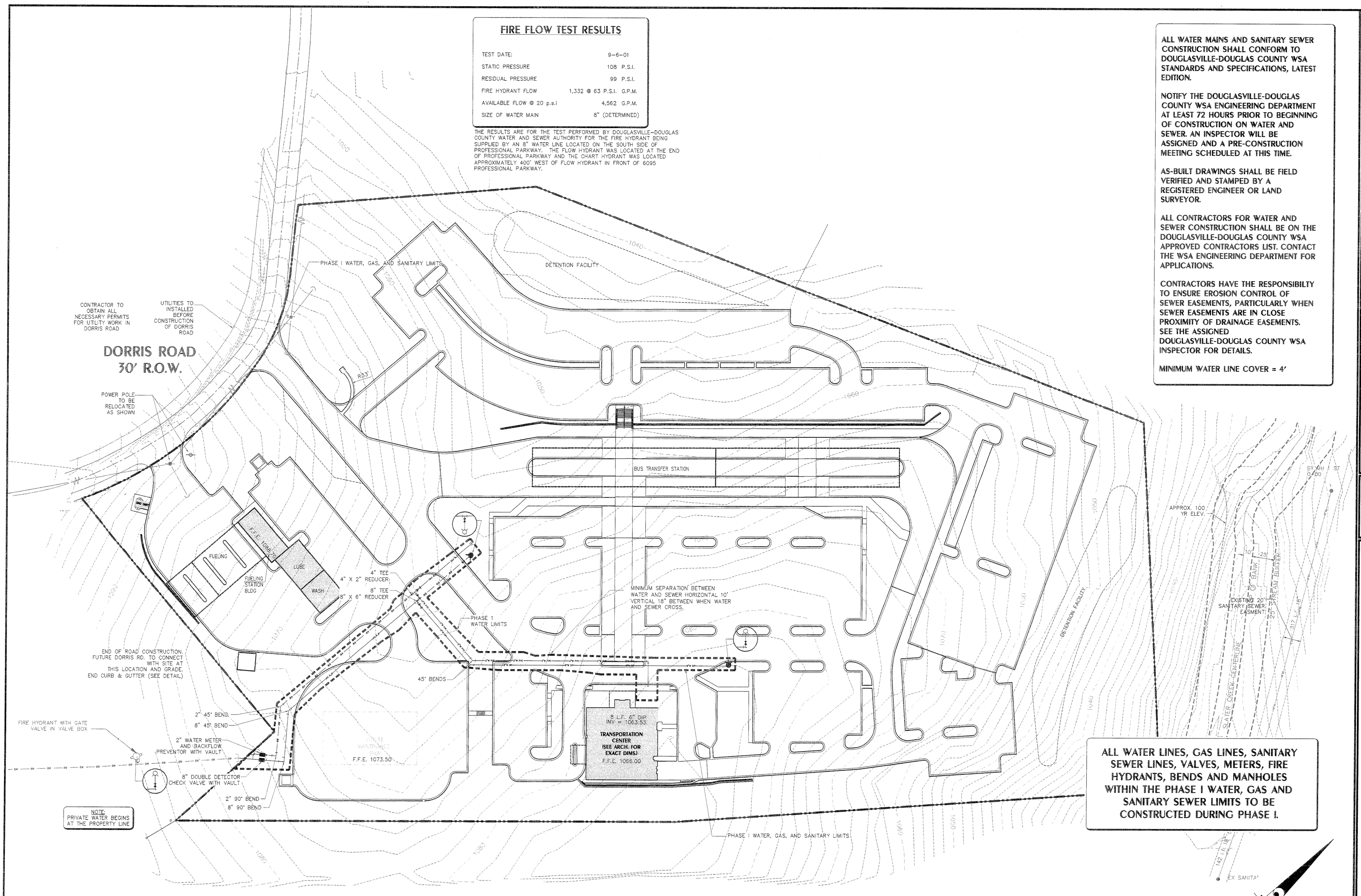

ALL WATER LINES, GAS LINES, SANITARY SEWER LINES, VALVES, METERS, FIRE HYDRANTS, BENDS AND MANHOLES WITHIN THE PHASE I WATER, GAS AND SANITARY SEWER LIMITS TO BE CONSTRUCTED DURING PHASE I.

NOTE:
PRIVATE WATER BEGINS AT THE PROPERTY LINE

NOTE:
1. MINIMUM SEPARATION BETWEEN WATER AND SEWER IS TO BE 10' HORIZONTAL, 18" VERTICAL, WHEN WATER AND SEWER CROSS.
2. THRUST BLOCKS ARE TO BE INSTALLED AT ALL BENDS, TEES, AND HYDRANTS.

IF YOU DIG GEORGIA...
CALL US FIRST!
1-800-282-7411
UTILITIES PROTECTION CENTER
IT'S THE LAW

24 HOUR EMERGENCY CONTACT:
CONTRACTOR WHEN SELECTED

GRAPHIC SCALE
40 0 40 80
(IN FEET)
1 inch = 40 ft.

DATE	REVISION
3-13-02	REVISED TRANS. CTR. SEWER LATERAL
3-13-02	REVISED PER NEW WATERLINE LOCATION
3-4-02	ADDENDUM REVISIONS
8-09-01	ADDENDUM 1
4-10-01	ISSUED FOR BID
01-03-01	COUNTY COMMENTS
12-6-00	COUNTY COMMENTS

HDR/WLJorden
ENGINEERS SURVEYORS PLANNERS
200 N. COBB PKWY., BLDG 100, STE. 134
MARIETTA, GEORGIA 30062
(770)578-0900 FAX (770)578-0910

GEORGIA REGISTERED PROFESSIONAL ENGINEER NO. 25693 TODD A. KORN

WATER PLAN
DOUGLAS COUNTY MULTI-MODAL TRANSPORTATION CENTER

CHECKED BY: D.E. P.M. QA/QC D.M.

DATE 7-14-00
SHEET C9.0
FILE NO. 10138.001

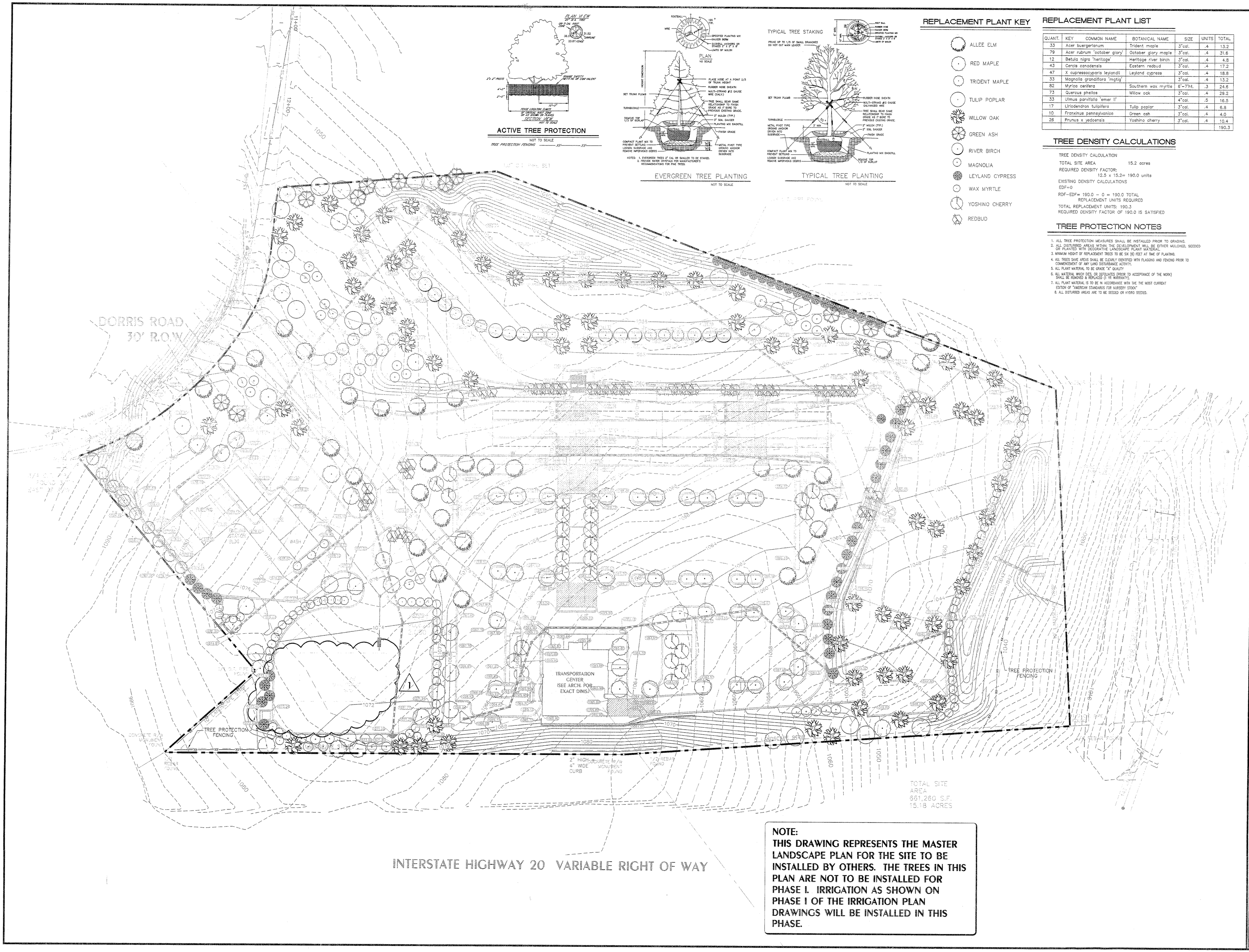

NOTE:
THIS DRAWING REPRESENTS THE MASTER LANDSCAPE PLAN FOR THE SITE TO BE INSTALLED BY OTHERS. THE TREES IN THIS PLAN ARE NOT TO BE INSTALLED FOR PHASE I. IRRIGATION AS SHOWN ON PHASE I OF THE IRRIGATION PLAN DRAWINGS WILL BE INSTALLED IN THIS PHASE.

ACTIVE TREE PROTECTION

NOT TO SCALE

TREE PROTECTION FENCING ——XX——

NOTES: 1. EVERGREEN TREES 2" CAL OR SMALLER TO BE STAKED.
2. PROVIDE WATER CRYSTALS PER MANUFACTURER'S RECOMMENDATIONS FOR PINE TREES.

EVERGREEN TREE PLANTING

NOT TO SCALE

TYPICAL TREE PLANTING

NOT TO SCALE

REPLACEMENT PLANT KEY

- ALLEE ELM
- RED MAPLE
- TRIDENT MAPLE
- TULIP POPLAR
- WILLOW OAK
- GREEN ASH
- RIVER BIRCH
- MAGNOLIA
- LEYLAND CYPRESS
- WAX MYRTLE
- YOSHINO CHERRY
- REDBUD

REPLACEMENT PLANT LIST

QUANT.	KEY	COMMON NAME	BOTANICAL NAME	SIZE	UNITS	TOTAL
33		Acer buergerianum	Trident maple	3"cal.	.4	13.2
79		Acer rubrum 'october glory'	October glory maple	3"cal.	.4	31.6
12		Betula nigra 'heritage'	Heritage river birch	3"cal.	.4	4.8
43		Cercis canadensis	Eastern redbud	3"cal.	.4	17.2
47		X cupressocyparis leylandii	Leyland cypress	3"cal.	.4	18.8
33		Magnolia grandiflora 'mgtig'		3"cal.	.4	13.2
82		Myrica cerifera	Southern wax myrtle	6'-7'ht.	.3	24.6
73		Quercus phellos	Willow oak	3"cal.	.4	29.2
33		Ulmus parvifolia 'emer II'		4"cal.	.5	16.5
17		Liriodendron tulipifera	Tulip poplar	3"cal.	.4	6.8
10		Fraxinus pennsylvanica	Green ash	3"cal.	.4	4.0
26		Prunus x yedoensis	Yoshino cherry	3"cal.	.4	10.4
						190.3

TREE DENSITY CALCULATIONS

TREE DENSITY CALCULATION

TOTAL SITE AREA 15.2 acres

REQUIRED DENSITY FACTOR:
12.5 x 15.2= 190.0 units

EXISTING DENSITY CALCULATIONS
EDF=0

RDF-EDF= 190.0 - 0 = 190.0 TOTAL REPLACEMENT UNITS REQUIRED

TOTAL REPLACEMENT UNITS: 190.3
REQUIRED DENSITY FACTOR OF 190.0 IS SATISFIED

TREE PROTECTION NOTES

1. ALL TREE PROTECTION MEASURES SHALL BE INSTALLED PRIOR TO GRADING.
2. ALL DISTURBED AREAS WITHIN THE DEVELOPMENT WILL BE EITHER MULCHED, SEEDED OR PLANTED WITH DECORATIVE LANDSCAPE PLANT MATERIAL.
3. MINIMUM HEIGHT OF REPLACEMENT TREES TO BE SIX (6) FEET AT TIME OF PLANTING.
4. ALL TREES SAVE AREAS SHALL BE CLEARLY IDENTIFIED WITH FLAGGING AND FENCING PRIOR TO COMMENCEMENT OF ANY LAND DISTURBANCE ACTIVITY.
5. ALL PLANT MATERIAL TO BE GRADE "A" QUALITY
6. ALL MATERIAL WHICH DIES, OR DEFOLIATES (PRIOR TO ACCEPTANCE OF THE WORK) SHALL BE REMOVED & REPLACED (1 YR WARRANTY).
7. ALL PLANT MATERIAL IS TO BE IN ACCORDANCE WITH THE THE MOST CURRENT EDITION OF "AMERICAN STANDARDS FOR NURSERY STOCK"
8. ALL DISTURBED AREAS ARE TO BE SEEDED OR HYDRO SEEDED.

REVISION	DATE
ADDENDUM 4	8-9-01
ISSUED FOR BID	A 4-10-01
COUNTY COMMENTS	A 07-03-01
COUNTY COMMENTS	A 12-5-00

HDR/WLJorden
ENGINEERS SURVEYORS PLANNERS
200 N. COBB PKWY., BLDG 100, STE. 134
MARIETTA, GEORGIA 30062
(678)784-4000 FAX (678)784-4040

GEORGIA REGISTERED NO. 25893 PROFESSIONAL LANDSCAPE ARCHITECT TODD A. KORN

7-2-01

TREE PROTECTION & REPLACEMENT PLAN
DOUGLAS COUNTY MULTI-MODAL TRANSPORTATION CENTER

CHECKED BY: D.E. | P.M. | QA/QC | D.M.

DATE 6-26-00

SHEET C10.0

FILE NO. 10138-001

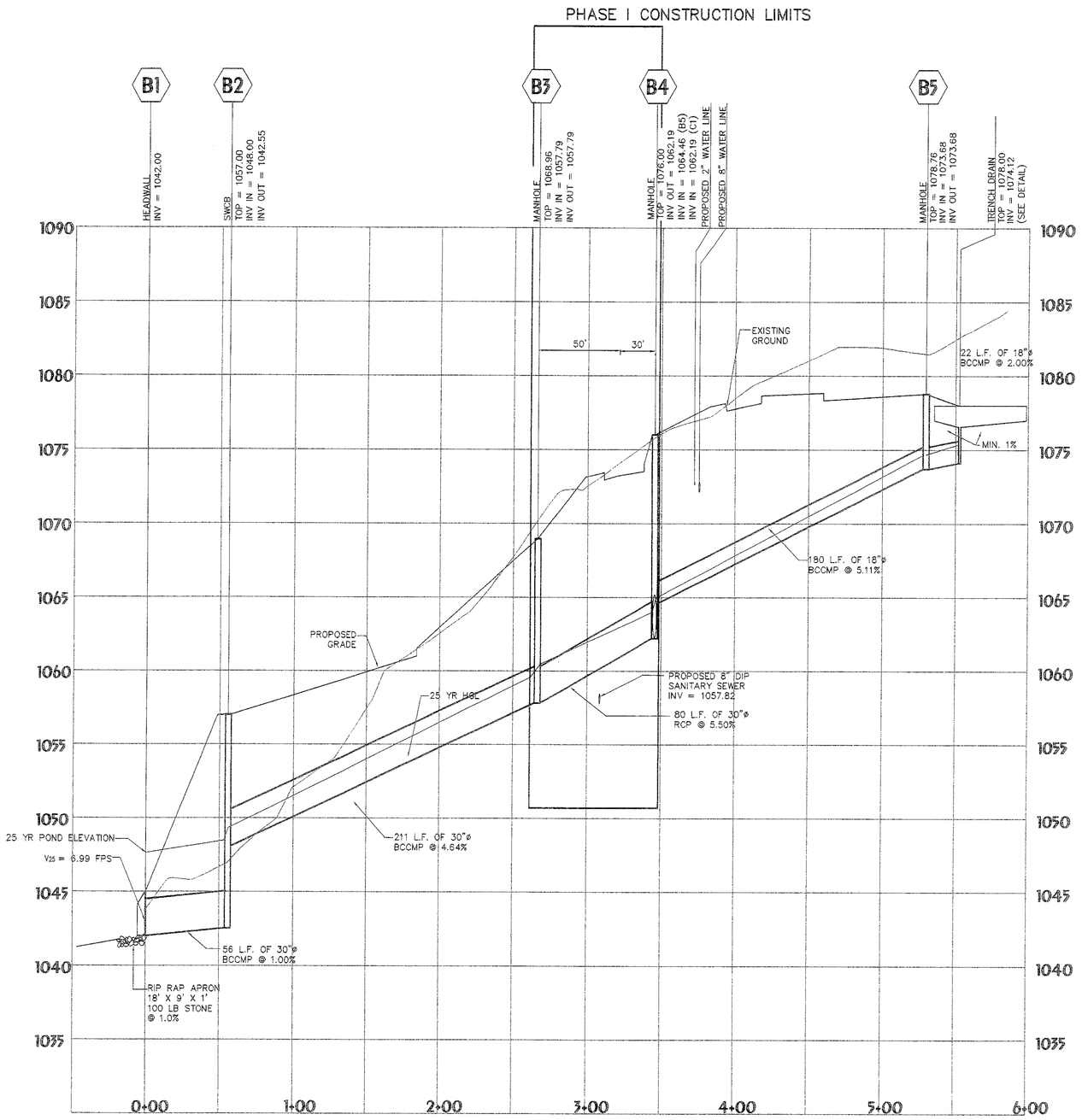

STORM PROFILE 'B'

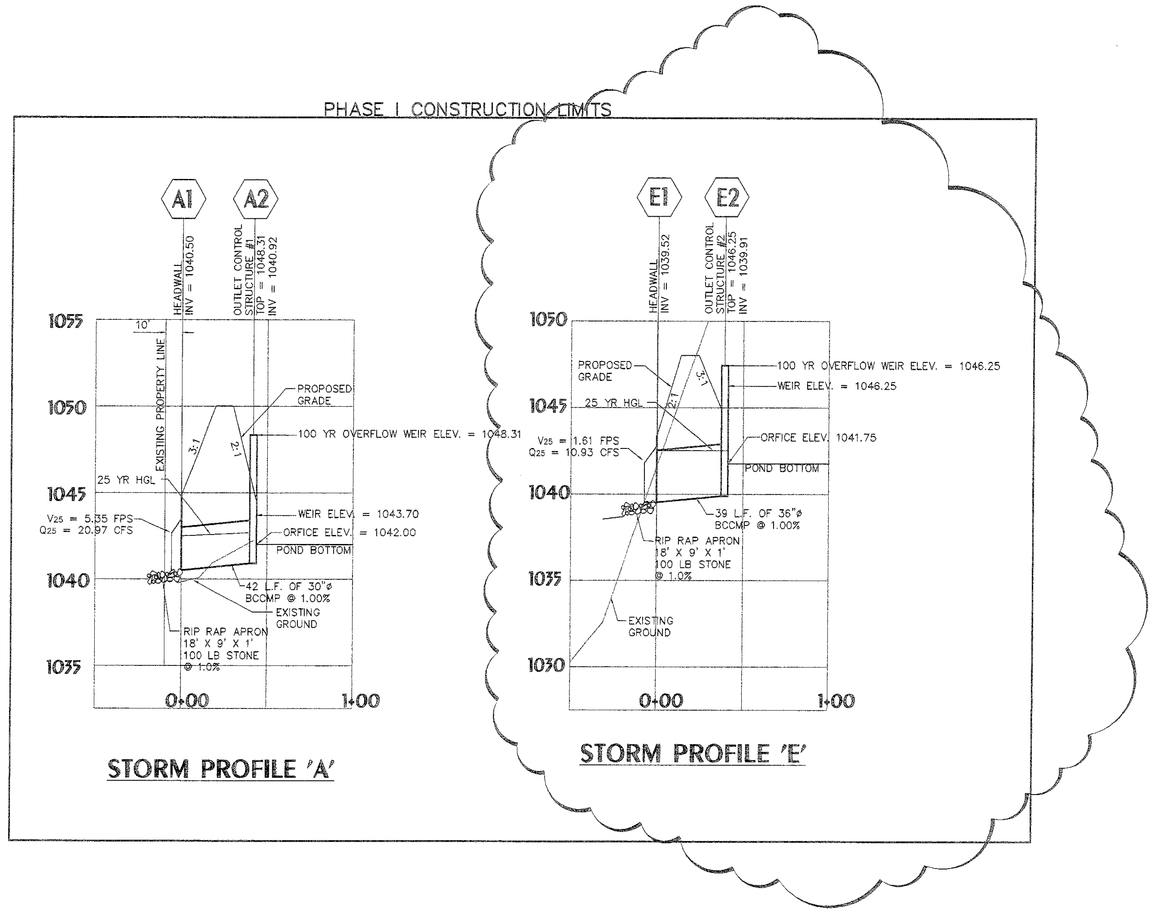

ALL STORM PIPE TO BE 16 GAUGE FULLY BITUMINOUS COATED METAL PIPE

SCALE
1" = 50' HORZ.
1" = 5' VERT.

Hydraflow Storm Sewers DOT Report

Line ID	LineLength (ft)	Incr.Area (ac)	TotalArea (ac)	RunoffCoeff. (C)	IncrC x A	TotalC x A	InletTime (min)	TimeConc (min)	RnfallInt (in/hr)	TotalRunoff (cfs)	AdnlFlow (cfs)	TotalFlow (cfs)	CapacFull (cfs)	Veloc (ft/s)	PipeSize (in)	PipeSlope (%)	Inv ElevUp (ft)	Inv ElevDn (ft)	HGLUp (ft)	HGLDn (ft)	Grnd/RimUp (ft)	Grnd/RimDn (ft)
B1-B2	56	1.06	6.25	0.65	0.69	4.22	5	7.20	8.10	34.06	0	34.06	27.81	6.94	30	1.00	1042.55	1042.00	1048.48	1047.65	1057.00	1045.00
B2-B3	211	0.00	5.19	0.00	0.00	3.53	0	6.90	8.20	28.99	0	28.99	60.44	9.89	30	4.64	1057.79	1048.00	1059.59	1049.22	1068.96	1057.00
B3-B4	80	0.00	5.19	0.00	0.00	3.53	0	6.70	8.30	29.26	0	29.26	65.81	6.83	30	5.50	1062.19	1057.79	1064.00	1060.50	1076.00	1068.96
B4-B5	180	0.50	0.50	0.95	0.47	0.47	5	5.00	9.00	4.30	0	4.30	16.24	6.11	18	5.11	1073.66	1064.46	1074.45	1064.99	1078.51	1076.00
B4-C1	181	0.35	4.69	0.95	0.33	3.05	5	6.10	8.50	26.04	0	26.04	28.06	5.37	30	1.00	1064.00	1062.19	1066.35	1064.92	1076.21	1076.00
C1-C2	228	1.08	1.65	0.65	0.70	0.90	5	5.10	9.00	8.10	0	8.10	9.63	5.98	18	1.80	1071.82	1067.72	1072.91	1068.78	1074.91	1076.21
C2-C3	8	0.57	0.57	0.35	0.20	0.20	5	5.00	9.00	1.80	0	1.80	7.19	1.02	18	1.00	1071.90	1071.82	1073.45	1073.45	1071.90	1074.91
C1-G1	142	0.00	2.69	0.00	0.00	1.82	0	5.50	8.80	16.04	0	16.04	27.96	3.73	30	1.00	1065.41	1064.00	1067.23	1066.81	1074.00	1076.21
G1-G2	141	1.19	2.69	0.90	1.07	1.82	5	5.10	9.00	16.41	0	16.41	15.53	5.58	24	1.00	1067.33	1065.91	1069.10	1067.68	1071.33	1074.00
G2-G3	10	1.50	1.50	0.50	0.75	0.75	5	5.00	9.00	6.78	0	6.78	15.48	2.16	24	1.00	1067.42	1067.33	1069.60	1069.58	1071.80	1071.33

REVISION	DATE
SITE REVISIONS	
ADDENDUM REVISIONS	
ADDENDUM 1	4-10-02
ISSUED FOR BID	3-4-02
COUNTY COMMENTS	8-09-01
COUNTY COMMENTS	4-10-01
COUNTY COMMENTS	01-03-01
	12-6-00

HDR/WLJorden
ENGINEERS · SURVEYORS · PLANNERS
200 N. COBB PKWY., BLDG 100, STE. 134
MARIETTA, GEORGIA 30062
(678)784-4000 FAX (678)784-4040

GEORGIA REGISTERED NO. 25693 PROFESSIONAL ENGINEER TODD A. KORN
5-10-02

STORM SEWER PROFILES
DOUGLAS COUNTY MULTI-MODAL TRANSPORTATION CENTER

CHECKED BY
D.E.
P.M.
QA/QC
D.M.

DATE 7-14-00
SHEET C11.0
FILE NO. 10138.001

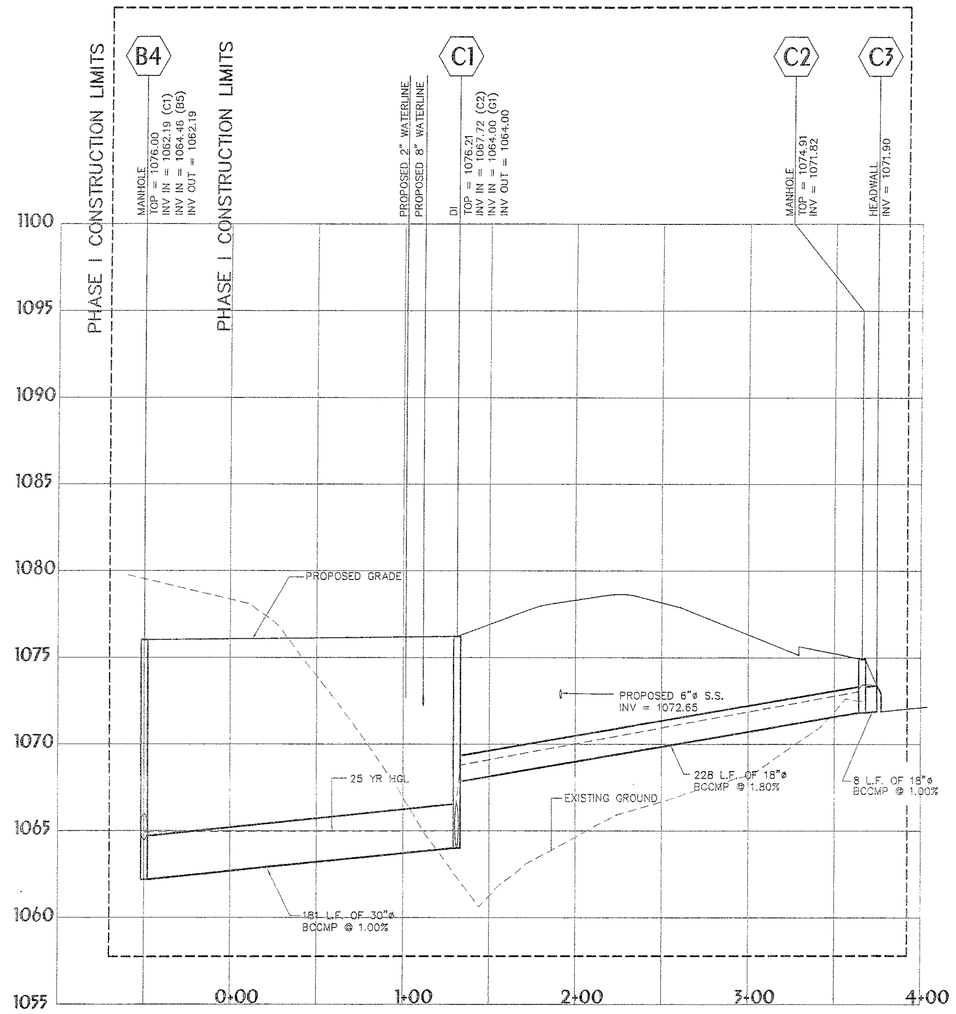

STORM PROFILE 'C'

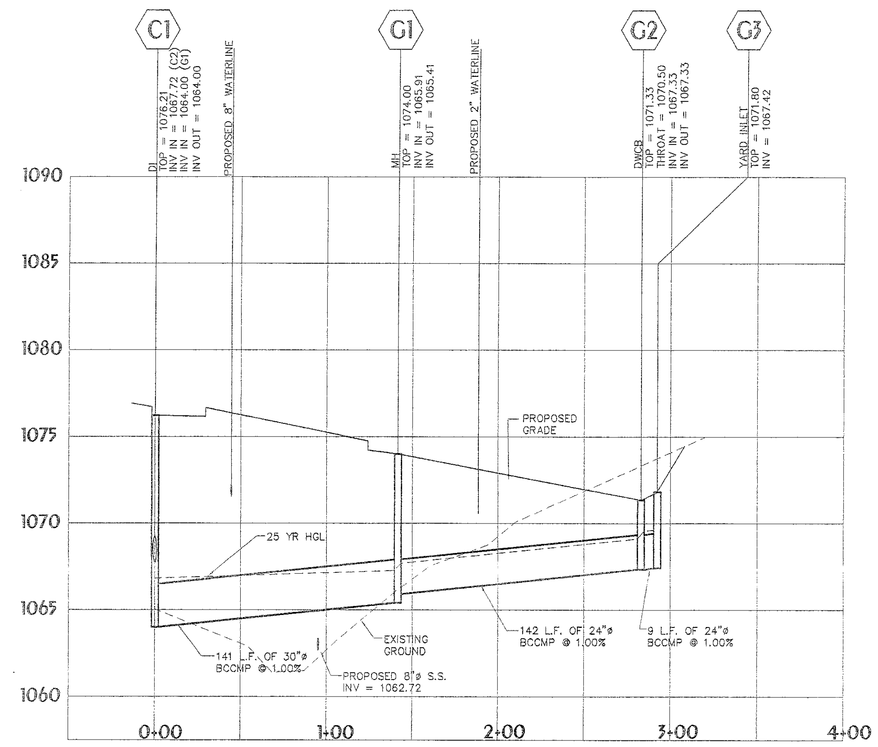

STORM PROFILE 'G'

1

SCALE
1" = 50' HORZ.
1" = 5' VERT.

ALL STORM PIPE TO BE
16 GAUGE FULLY
BITUMINOUS COATED
METAL PIPE

Hydraflow Storm Sewers DOT Report

Line ID	Line Length (ft)	Incr. Area (ac)	Total Area (ac)	Runoff Coeff (C)	Incr C	x	Total C	x	Inlet Time (min)	Time Conc (min)	Rnfall Int (in/hr)	Total Runoff (cfs)	Add'l Flow (cfs)	Total Flow (cfs)	Capac Full (cfs)	Veloc (ft/s)	Pipe Size (in)	Pipe Slope (%)	Inv Elev Up (ft)	Inv Elev Dn (ft)	HGL Up (ft)	HGL Dn (ft)	Grnd/Rim Up (ft)	Grnd/Rim Dn (ft)
B1–B2	56	1.06	6.25	0.65	0.69		4.22		5	7.20	8.10	34.06	0	34.06	27.81	6.94	30	1.00	1042.55	1042.00	1048.48	1047.65	1057.00	1045.00
B2–B3	211	0.00	5.19	0.00	0.00		3.53		0	6.90	8.20	28.99	0	28.99	60.44	9.89	30	4.64	1057.79	1048.00	1059.59	1049.22	1068.96	1057.00
B3–B4	80	0.00	5.19	0.00	0.00		3.53		0	6.70	8.30	29.26	0	29.26	65.81	6.83	30	5.50	1062.19	1057.79	1064.00	1060.50	1076.00	1068.96
B4–B5	180	0.50	0.50	0.95	0.47		0.47		5	5.00	9.00	4.30	0	4.30	16.24	5.11	18	5.11	1073.66	1064.46	1074.45	1064.99	1078.51	1076.00
B4–C1	181	0.35	4.69	0.95	0.33		3.05		5	6.10	8.50	26.04	0	26.04	28.06	5.37	30	1.00	1064.00	1062.19	1066.35	1064.92	1076.21	1076.00
C1–C2	228	1.08	1.65	0.65	0.70		0.90		5	5.10	9.00	8.10	0	8.10	9.63	5.98	18	1.80	1071.82	1067.72	1072.91	1068.78	1074.91	1076.21
C2–C3	8	0.57	0.57	0.35	0.20		0.20		5	5.00	9.00	1.80	0	1.80	7.19	1.02	18	1.00	1071.90	1071.82	1073.45	1073.45	1071.90	1074.91
C1–G1	142	0.00	2.69	0.00	0.00		1.82		0	5.50	8.80	16.04	0	16.04	27.96	3.73	30	1.00	1065.41	1064.00	1067.23	1066.81	1074.00	1076.21
G1–G2	141	1.19	2.69	0.90	1.07		1.82		5	5.10	9.00	16.41	0	16.41	15.53	5.58	24	1.00	1067.33	1065.91	1069.10	1067.68	1071.33	1074.00
G2–G3	10	1.50	1.50	0.50	0.75		0.75		5	5.00	9.00	6.78	0	6.78	15.48	2.16	24	1.00	1067.42	1067.33	1069.60	1069.58	1071.80	1071.33

REVISION	DATE
ADDENDUM 1	
ISSUED FOR BID	8-09-01
COUNTY COMMENTS	4-10-01
COUNTY COMMENTS	01-03-01
	12-6-00

HDR/WLJorden
ENGINEERS SURVEYORS · PLANNERS
200 N. COBB PKWY., BLDG 100, STE. 134
MARIETTA, GEORGIA 30062
(678)784-4000 FAX (678)784-4010

GEORGIA REGISTERED NO. 26893 PROFESSIONAL ENGINEER TODD A. KORN

9-4-01

STORM SEWER PROFILES
DOUGLAS COUNTY MULTI-MODAL TRANSPORTATION CENTER

CHECKED BY
D.E.
P.M.
QA/QC
D.M.

DATE 7-14-00
SHEET C11.1
FILE NO. 10138.001

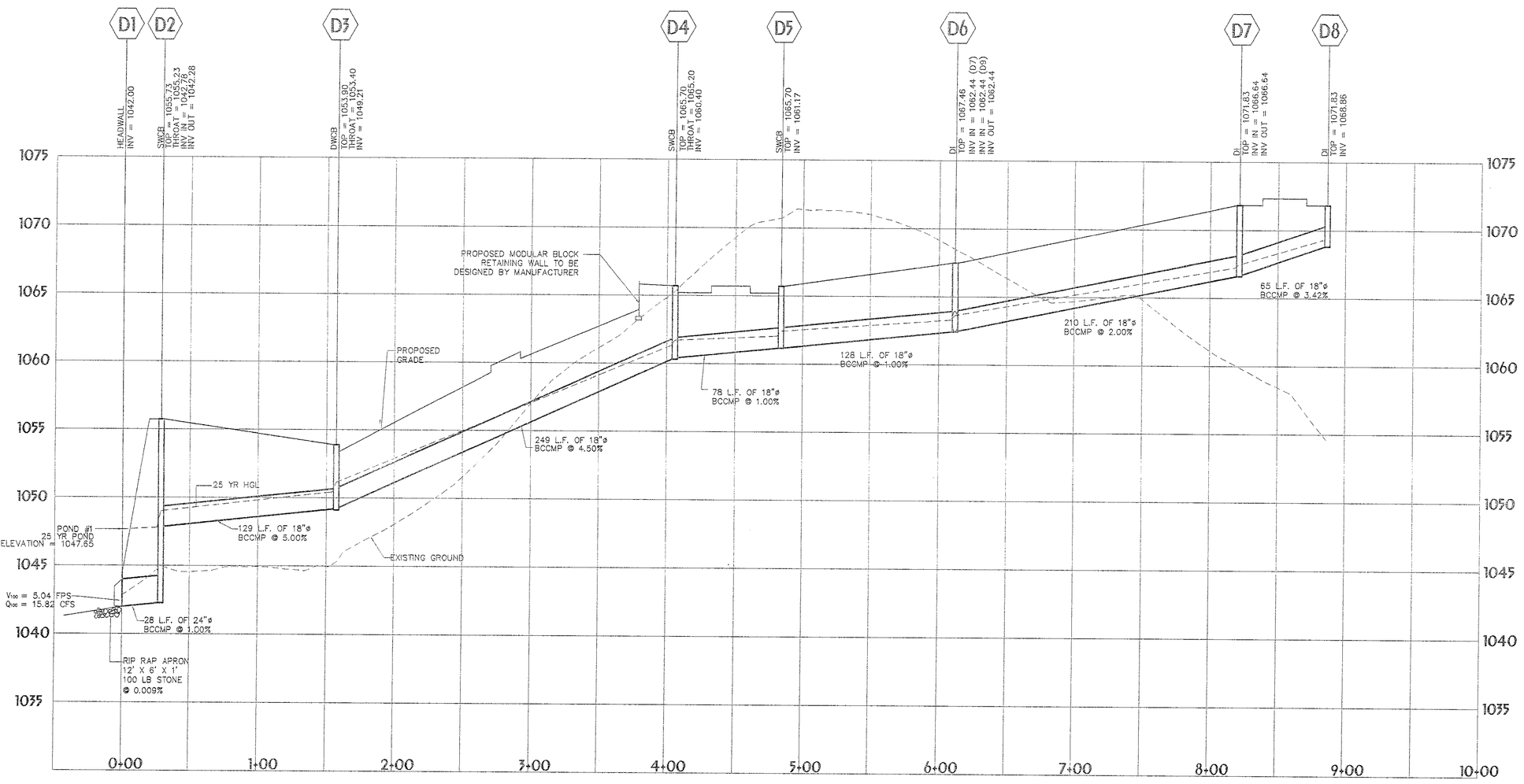

STORM PROFILE 'D'

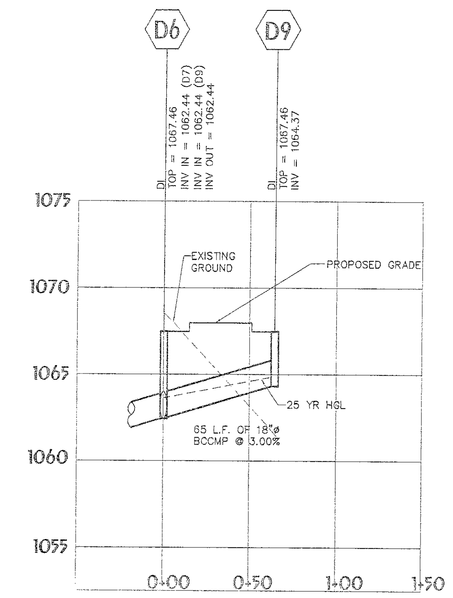

STORM PROFILE 'D'

SCALE
1" = 50' HORZ.
1" = 5' VERT.

ALL STORM PIPE TO BE 16 GAUGE FULLY BITUMINOUS COATED METAL PIPE

Hydraflow Storm Sewers DOT Report

Line ID	LineLength (ft)	Incr.Area (ac)	TotalArea (ac)	RunoffCoeff. (C)	IncrC x A	TotalC x A	InletTime (min)	TimeConc (min)	Rnfallnt (in/hr)	TotalRunoff (cfs)	AdnlFlow (cfs)	TotalFlow (cfs)	CapacFull (cfs)	Veloc (ft/s)	PipeSize (in)	PipeSlope (%)	Inv ElevUp (ft)	Inv ElevDn (ft)	HGLUp (ft)	HGLDn (ft)	Grnd/RimUp (ft)	Grnd/RimDn (ft)
D1-D2	29	0.88	2.44	0.85	0.75	2.12	5	9	7.5	15.82	0	15.82	22.44	5.04	24	1	1042.26	1042.00	1047.79	1047.65	1055.73	1044.00
D2-D3	129	0.77	1.56	0.85	0.65	1.37	5	8.7	7.6	10.37	0	10.37	10.88	6.83	18	1.07	1049.21	1047.83	1050.44	1049.01	1053.90	1055.73
D3-D4	249	0.08	0.79	0.9	0.07	0.71	5	7.7	7.9	5.66	0	5.66	22.27	4.13	18	4.5	1060.40	1049.21	1061.31	1051.13	1065.70	1053.90
D4-D5	78	0.08	0.71	0.9	0.07	0.64	5	7.3	8	5.17	0	5.17	10.44	4.02	18	1	1061.17	1060.40	1062.04	1061.71	1065.70	1065.70
D5-D6	128	0.16	0.64	0.9	0.14	0.58	5	6.8	8.2	4.75	0	4.75	7.16	3.87	18	1	1062.44	1061.17	1063.28	1062.41	1067.46	1065.70
D6-D7	210	0.15	0.31	0.9	0.14	0.28	5	5.5	8.8	2.46	0	2.46	14.65	2.69	18	2	1066.64	1062.44	1067.24	1063.62	1071.83	1067.46
D7-D8	65	0.16	0.16	0.9	0.14	0.14	5	5	9	1.30	0	1.30	13.28	2.19	18	3.42	1068.86	1066.64	1069.30	1067.46	1071.83	1071.83
D6-D9	65	0.17	0.17	0.9	0.15	0.15	5	5	9	1.38	0	1.38	18.17	2.02	18	2.99	1064.37	1062.44	1064.82	1063.62	1067.46	1067.46

▲	ADDENDUM 2
▲	ISSUED FOR BID
▲ 5-09-01	COUNTY COMMENTS
▲ 4-10-01	COUNTY COMMENTS
▲ 11-03-01	REVISION
▲ 12-19-00	DATE

HR/WLJorden
ENGINEERS SURVEYORS PLANNERS
2100 NORTH PARK, BLDG 100, STE. 134
MARIETTA, GEORGIA 30062
(678)784-4000 FAX (678)784-4040

GEORGIA REGISTERED PROFESSIONAL ENGINEER NO. 25893 TODD A. KORN
5-9-01

STORM SEWER PROFILES
DOUGLAS COUNTY MULTI-MODAL TRANSPORTATION CENTER

CHECKED BY	
D.E.	
P.M.	
QA/QC	
D.M.	
DATE 7-14-00	
SHEET C11.2	
FILE NO. 10138.001	

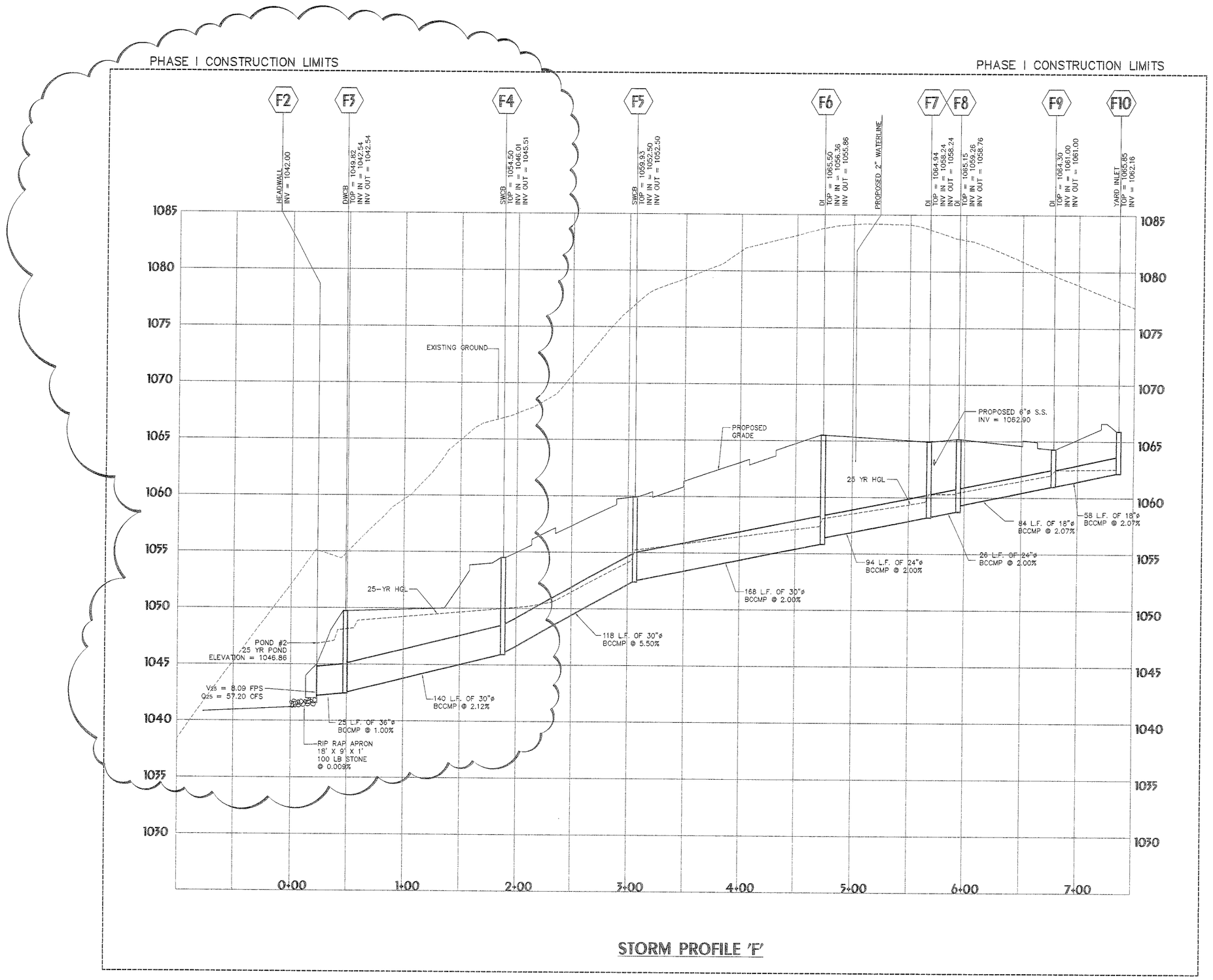

STORM PROFILE 'F'

SCALE
1" = 50' HORZ.
1" = 5' VERT.

ALL STORM PIPE TO BE 16 GAUGE FULLY BITUMINOUS COATED METAL PIPE

Hydraflow Storm Sewers DOT Report

Line ID	LineLength (ft)	Incr.Area (ac)	TotalArea (ac)	RunoffCoeff. (C)	IncrC x A	TotalC x A	InletTime (min)	TimeConc (min)	RnfaInt (in/hr)	TotalRunoff (cfs)	AdjFlow (cfs)	TotalFlow (cfs)	CapacFull (cfs)	Veloc (ft/s)	PipeSize (in)	PipeSlope (%)	Inv ElevUp (ft)	Inv ElevDn (ft)	HGLUp (ft)	HGLDn (ft)	Grnd/RimUp (ft)	Grnd/RimDn (ft)
F2–F3	18	2.00	7.11	0.85	1.70	6.14	5	7.8	7.9	48.27	0	48.27	44.34	6.83	36	1	1036.34	1036.17	1042.36	1042.16	1045.40	1043.50
F3–F4	153	0.90	5.11	0.85	0.76	4.44	5	7.4	8.0	35.56	0	35.56	111.70	6.28	36	6	1045.51	1036.34	1047.41	1043.09	1054.50	1045.40
F4–F5	118	1.21	4.21	0.9	1.09	3.67	5	7.1	8.1	29.82	0	29.82	65.61	7.05	30	5.5	1052.50	1046.01	1054.32	1048.29	1059.93	1054.50
F5–F6	168	0.93	3.00	0.85	0.79	2.58	5	6.6	8.3	21.49	0	21.49	39.68	5.55	30	2	1055.86	1052.50	1057.41	1055.26	1065.50	1059.93
F6–F7	94	0.93	2.07	0.95	0.88	1.79	5	6.3	8.4	15.11	0	15.11	21.89	5.87	24	2	1058.24	1056.36	1059.62	1058.11	1064.94	1065.50
F7–F8	26	0.13	1.14	0.85	0.11	0.91	5	6.2	8.5	7.72	0	7.72	21.89	2.71	24	2	1058.76	1058.24	1060.31	1060.28	1065.15	1064.94
F8–F9	84	0.86	1.01	0.85	0.73	0.80	5	5.9	8.6	6.88	0	6.88	10.34	5.04	18	2.07	1061.00	1059.26	1062.00	1060.45	1064.30	1065.15
F9–F10	58	0.15	0.15	0.45	0.07	0.07	5	5	9	0.61	0	0.61	10.16	1.05	18	2	1062.16	1061.00	1062.54	1062.47	1065.91	1064.30

DATE	REVISION
4-10-02	SITE REVISIONS
3-4-02	ADDENDUM REVISIONS
8-09-01	ADDENDUM 1
4-10-01	ISSUED FOR BID
01-03-01	COUNTY COMMENTS
12-6-00	COUNTY COMMENTS

HDR/WLJorden
ENGINEERS SURVEYORS · PLANNERS
200 N. COBB PKWY., BLDG 100, STE. 134
MARIETTA, GEORGIA 30062
WEBSITE: HDR.COM FAX: (770)792-4040

GEORGIA REGISTERED NO. 25893 PROFESSIONAL ENGINEER TODD A. KORN
5-10-01

STORM SEWER PROFILES
DOUGLAS COUNTY MULTI-MODAL TRANSPORTATION CENTER

CHECKED BY: D.E. P.M. QA/QC D.M.

DATE 7-14-00
SHEET C11.3
FILE NO. 10138.001

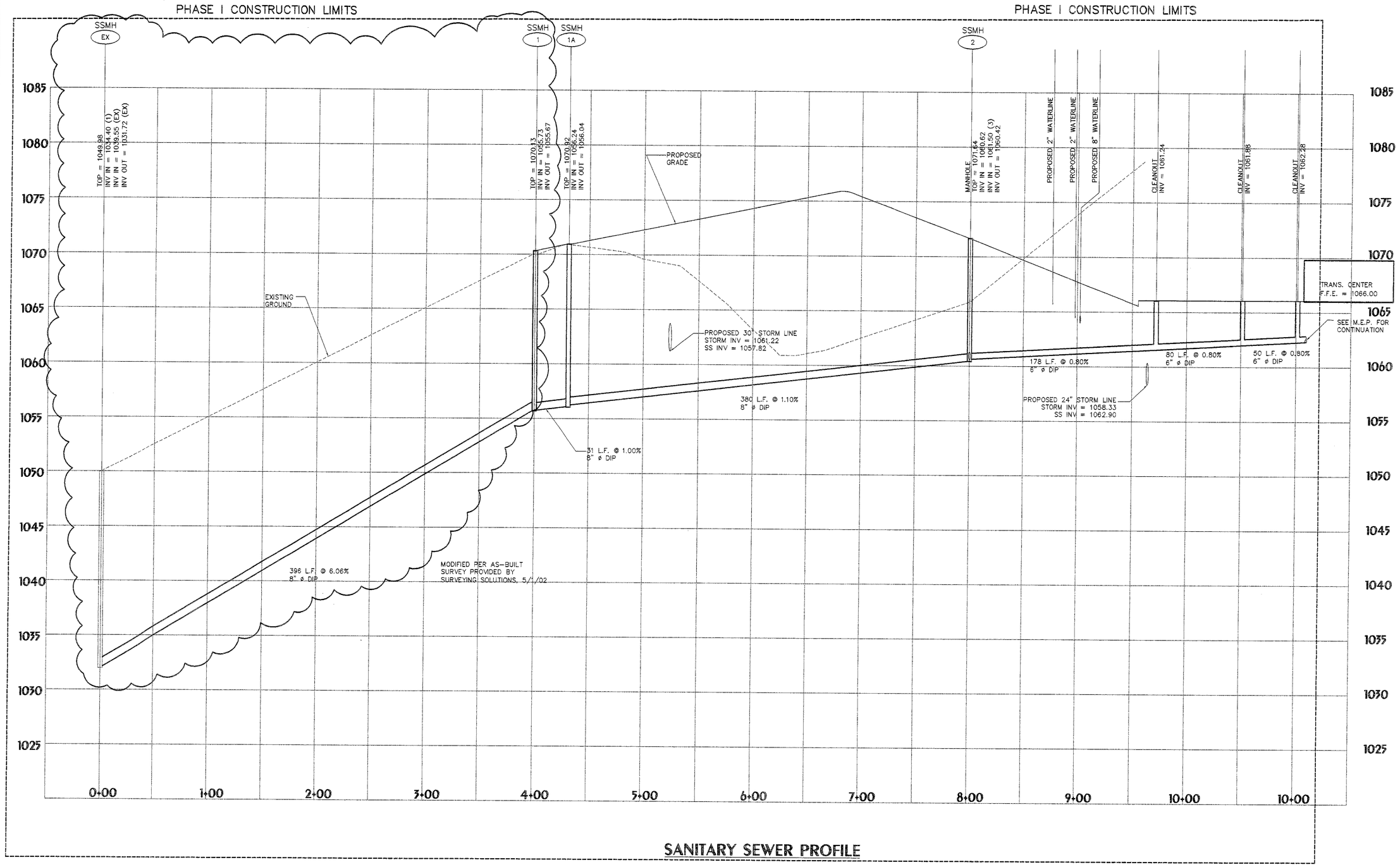

SANITARY SEWER PROFILE

SCALE
1" = 50' HORZ.
1" = 5' VERT.

NOTE:
WSA MANHOLE RING AND COVER ON PUBILICLY OWNED SEWER ONLY.

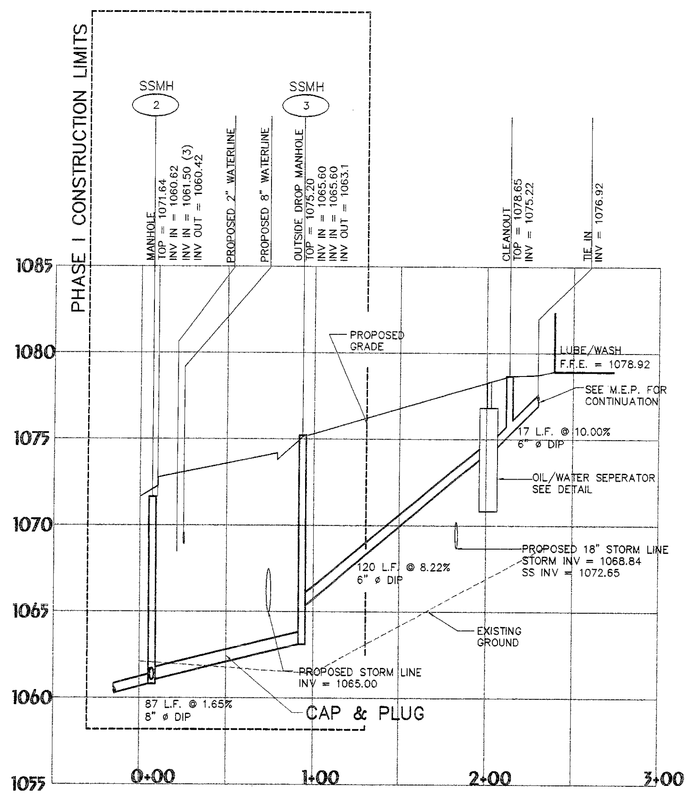

SANITARY SEWER PROFILE

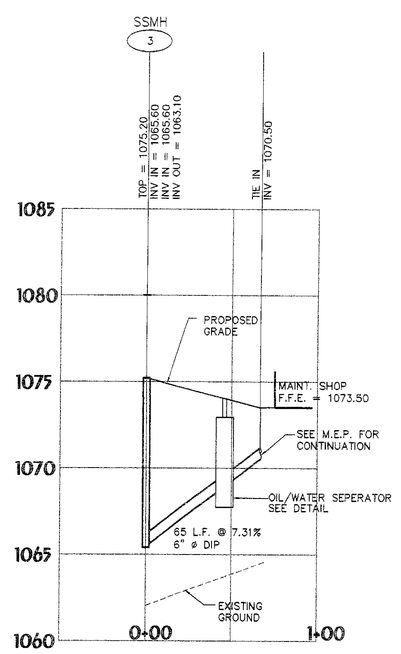

SANITARY SEWER PROFILE

REVISION	DATE
SITE REVISIONS	5-10-02
CPS REVISIONS	4-08-02
ADDENDUM REVISIONS	3-4-02
ADDENDUM 1	8-09-01
ISSUED FOR BID	4-10-01
COUNTY COMMENTS	01-03-01
COUNTY COMMENTS	12-6-00

HDR/WLJorden
ENGINEERS SURVEYORS · PLANNERS
200 N. COBB PKWY., BLDG 100, STE. 134
MARIETTA, GEORGIA 30062-5975
(678)784-4000 FAX (678)784-4040

GEORGIA REGISTERED NO. 26893 PROFESSIONAL ENGINEER TODD A. KORN
5-10-02

SANITARY SEWER PROFILES
DOUGLAS COUNTY MULTI-MODAL TRANSPORTATION CENTER

DATE 7-14-00
CHECKED BY: D.E. P.M. QA/QC D.M.
SHEET C11.4
FILE NO. 10138.001

FOR TEMPORARY PROTECTION OF CRITICAL AREAS WITHOUT SEEDING.

THIS STANDARD APPLIES TO GRADES OR CLEARED AREAS WHICH MAY BE SUBJECTED TO EROSION FOR 6 MONTHS OR LESS, WHERE SEEDINGS MAY NOT HAVE A SUITABLE GROWING SEASON TO PRODUCE AN EROSION RETARDANT COVER, BUT WHICH CAN BE STABILIZED WITH A MULCH COVER.

MATERIALS	RATE
DRY STRAW OR HAY	2-1/2 TONS PER ACRE
WOOD WASTE, CHIPS SAWDUST OR BARK	2" TO 3" THICK, ABOUT 6 TO 9 TONS PER ACRE
EROSION CONTROL MATTING OR NETTING	APPLY IN ACCORDANCE WITH MANUFACTURERS RECOMMENDATIONS
CUTBACK ASPHALT (SLOW CURING)	1200 GALLONS PER ACRE, OR 1/4 GALLON PER SQUARE YARD
POLYETHYLENE FILM	SECURED OVER BANKS OR STOCKPILED SOIL MATERIAL

Ds1 TEMPORARY MULCHING

REFER TO THE "MANUAL FOR EROSION AND SEDIMENT CONTROL IN GEORGIA" FOR FURTHER DETAILS AND SPECIFICATIONS.

SEEDING RATES FOR TEMPORARY SEEDINGS

SPECIES	Rate per 1000 sq. ft.	Rate per Acre[1]	Planting Dates[2] Mts-L'stone	Piedmont	Coastal
Rye	3 pounds	2-3 bu.	8/1-12/1 3/1-4/1	9/1-1/1 3/1-4/1	10/1-3/1
Ryegrass	1 pound	40-50 lbs.	8/1-12/1	8/15-1/1	8/15-3/1
Rye and Annual Lespedeza	1 1/2 pounds 1/2 pounds	1-1 1/2 bu. 20-25 lbs.	3/1-4/1 3/1-4/1	3/1-4/1 3/1-4/1	2/1-3/1 2/1-3/1
Weeping Lovegrass	0.2 pounds	4-6 lbs.	3/15-8/1	3/1-8/15	2/15-8/15
Sudangrass	1 pound	35-45 lbs.	4/1-8/1	4/1-7/15	4/1-7/15
Browntop Millet	1 pound	30-40 lbs.	4/1-7/1	4/1-7/15	4/1-7/15
Wheat	3 pounds	2-3 bu.	10/1-12/1	10/15-1/1	11/1-1/15

1. Unusual site conditions may require heavier seeding rates.
2. Seeding dates may need to be altered to fit temperature variations and local conditions.

Ds2 TEMPORARY GRASSING

REFER TO THE "MANUAL FOR EROSION AND SEDIMENT CONTROL IN GEORGIA" FOR FURTHER DETAILS AND SPECIFICATIONS.

SEEDING RATES FOR PERMANENT SEEDINGS

SPECIES	Rate per 1000 sq. ft.	Rate per Acre[1]	Planting Dates[2] Mts-L'stone	Piedmont	Coastal
Lespedeza (unscarified)	1.7 lb.	75 lbs.	1/1-12/31	1/1-12/31	1/1-12/31
Lovegrass (weeping)	0.1 lbs.	4 lb.	3/15-6/15	3/1-6/15	2/1-6/15
Bermuda (common)	0.2 lb.	10 lbs.		3/1-10/1	2/1-11/1
Lespedeza Sericea (unscarified)	1.7 lb.	75 lbs.	1/1-12/31	1/1-12/31	1/1-12/31
Tall Fescue	1.1 lb.	50 lbs.	3/1-4/15 8/1-11/1	8/15-11/1	
Switchgrass	0.9 lb.	40 lbs.	3/15-6/1	3/15-6/1	3/15-6/1

1. Unusual site conditions may require heavier seeding rates.
2. Seeding dates may need to be altered to fit temperature variations and local conditions.

Ds3 PERMANENT GRASSING

REFER TO THE "MANUAL FOR EROSION AND SEDIMENT CONTROL IN GEORGIA" FOR FURTHER DETAILS AND SPECIFICATIONS.

MAINTENANCE REQUIREMENTS:
SEDIMENT SHALL BE REMOVED ONCE IT HAS ACCUMULATED TO ONE-HALF THE ORIGINAL HEIGHT OF THE BARRIER. FILTER FABRIC SHALL BE REPLACED WHENEVER IT HAS DETERIORATED TO SUCH AN EXTENT THAT THE EFFECTIVENESS OF THE FABRIC IS REDUCED (APPROXIMATELY 6 MONTHS). TEMPORARY SEDIMENT BARRIERS SHALL REMAIN IN PLACE UNTIL DISTURBED AREAS HAVE BEEN PERMANENTLY STABILIZED. ALL SEDIMENT ACCUMULATED AT THE BARRIER SHALL BE REMOVED AND PROPERLY DISPOSED OF BEFORE THE BARRIER IS REMOVED.

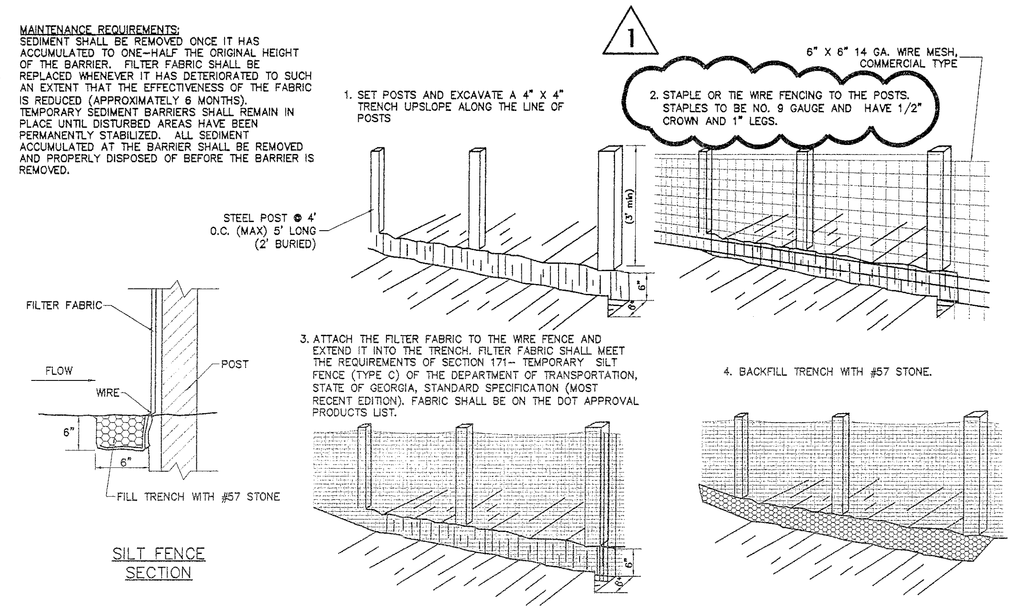

SILT FENCE SECTION

Sd1-C SILT FENCE WITH WIRE BACKING

NOT TO SCALE

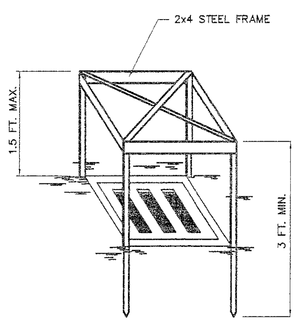

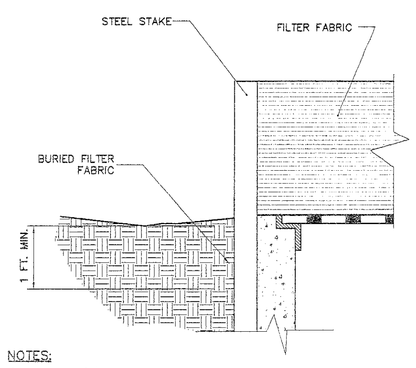

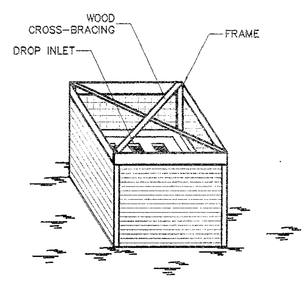

NOTES:

1. USE TYPE 'C' SILT FENCE SUPPORTED BY STEEL POSTS.
2. SPACE STAKES EVENLY AROUND THE PERIMETER OF THE INLET A MAXIMUM OF 3 FEET APART, AND SECURELY DRIVE THEM INTO THE GROUND, APPROXIMATELY 18 INCHES DEEP.
3. TO PROVIDE NEEDED STABILITY TO THE INSTALLATION, FRAME WITH A 2x4 INCH WOOD STRIPS AROUND THE CREST OF THE OVERFLOW AREA AT A MAXIMUM OF 1.5 FEET ABOVE THE DROP INLET CREST.
4. PLACE THE BOTTOM 12 INCHES OF THE FABRIC IN A TRENCH AND BACKFILL THE TRENCH WITH AT LEAST 4 INCHES OF CRUSHED STONE OR 12 INCHES OF COMPACTED SOIL.
5. FASTEN FABRIC AND WIRE SECURELY TO THE POSTS. FABRIC ENDS MUST BE OVERLAPPED A MINIMUM OF 18" OR WRAPPED TOGETHER AROUND A POST TO PROVIDE A CONTINUOUS FABRIC BARRIER AROUND THE INLET.
6. THE TOP OF THE FRAME AND FABRIC MUST BE WELL BELOW THE GROUND ELEVATION DOWNSLOPE FROM THE DROP INLET TO KEEP RUNOFF FROM BYPASSING THE INLET. IT MAY BE NECESSARY TO BUILD A TEMPORARY DIKE ON THE DOWN SLOPE SIDE OF THE STRUCTURE TO PREVENT BYPASS FLOW.

Sd2-F INLET SEDIMENT TRAP

FILTER FABRIC w/ SUPPORTING FRAME

NOT TO SCALE

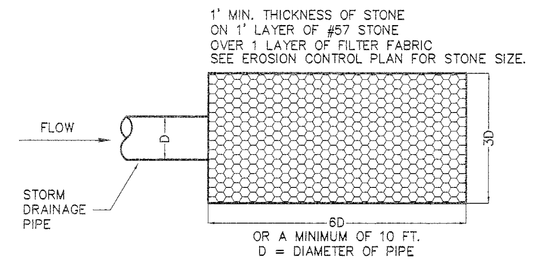

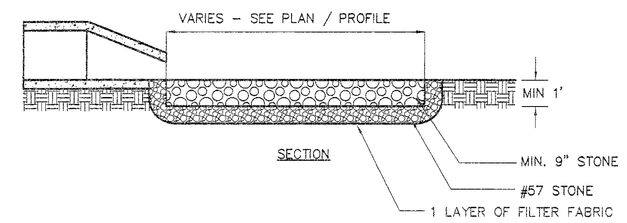

STORM DRAIN OUTLET PROTECTION CONSTRUCTION SPECIFICATIONS

1. ENSURE THAT THE SUBGRADE FOR THE FILTER AND RIPRAP FOLLOWS THE REQUIRED LINES AND GRADES SHOWN IN THE PLAN. COMPACT ANY FILL REQUIRED IN THE SUBGRADE TO THE DENSITY OF THE SURROUNDING UNDISTURBED MATERIAL. LOW AREAS IN THE SUBGRADE ON UNDISTURBED SOIL MAY ALSO BE FILLED BY INCREASING THE RIPRAP THICKNESS.
2. THE RIPRAP AND GRAVEL FILTER MUST CONFORM TO THE SPECIFIED GRADING LIMITS SHOWN ON THE PLANS.
3. FILTER FABRIC, WHEN USED, MUST MEET DESIGN REQUIREMENTS AND BE PROPERLY PROTECTED FROM PUNCHING OR TEARING DURING INSTALLATION. REPAIR ANY DAMAGE BY REMOVING THE RIPRAP AND PLACING ANOTHER PIECE OF FILTER FABRIC OVER THE DAMAGED AREA. ALL CONNECTING JOINTS SHOULD OVERLAP A MINIMUM OF 1 FT. IF THE DAMAGE IS EXTENSIVE, REPLACE THE ENTIRE FILTER FABRIC.
4. RIPRAP MAY BE PLACED BY EQUIPMENT, BUT TAKE CARE TO AVOID DAMAGING THE FILTER.
5. THE MINIMUM THICKNESS OF THE RIPRAP SHOULD BE 1.5 TIMES THE MAXIMUM STONE DIAMETER.
6. RIPRAP MAY BE FIELD STONE OR ROUGH QUARRY STONE. IT SHOULD BE HARD, ANGULAR, HIGHLY WEATHER-RESISTANT AND WELL GRADED.
7. CONSTRUCT THE APRON ON ZERO GRADE WITH NO OVERFALL AT THE END. MAKE THE TOP OF RIPRAP AT THE DOWNSTREAM END LEVEL WITH THE RECEIVING AREA OR SLIGHTLY BELOW IT.
8. ENSURE THAT THE APRON IS PROPERLY ALIGNED WITH THE RECEIVING STREAM AND PREFERABLY STRAIGHT THROUGHOUT ITS LENGTH. IF A CURVE IS NEEDED TO FIT SITE CONDITIONS, PLACE IT IN THE UPPER SECTION OF THE APRON.
9. IMMEDIATELY AFTER CONSTRUCTION, STABILIZE ALL DISTURBED AREAS WITH VEGETATION.
10. STONE QUALITY - SELECT STONE FOR RIPRAP FROM FIELD STONE OR QUARRY STONE. THE STONE SHOULD BE HARD, ANGULAR, AND HIGHLY WEATHER-RESISTANT. THE SPECIFIC GRAVITY OF THE INDIVIDUAL STONES SHOULD BE AT LEAST 2.5
11. FILTER - INSTALL A FILTER TO PREVENT SOIL MOVEMENT THROUGH THE OPENINGS IN THE RIPRAP. THE FILTER SHOULD CONSIST OF A GRADED GRAVEL LAYER OR A SYNTHETIC FILTER CLOTH.

St STORM DRAIN OUTLET PROTECTION

NOT TO SCALE

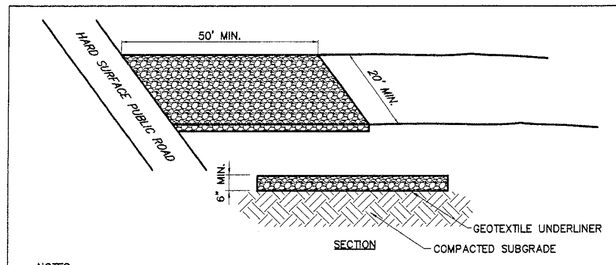

NOTES:

1. NATIONAL STONE ASSOCIATION R-2 (1.5"-3.5") COARSE AGGREGATE
2. AT A MINIMUM, THE WIDTH SHOULD EQUAL FULL WIDTH OF ALL POINTS OF VEHICULAR EGRESS, BUT NOT LESS THAN 20 FEET WIDE. THE GRAVEL PAD SHALL HAVE A MINIMUM THICKNESS OF 6 INCHES.
3. IF THE ACTION OF THE VEHICLE TRAVELING OVER THE GRAVEL PAD DOES NOT SUFFICIENTLY REMOVE THE MUD, THE TIERS SHOULD BE WASHED PRIOR TO ENTRANCE ONTO PUBLIC RIGHTS-OF-WAY. WHEN WASHING IS REQUIRED, IT SHALL BE DONE ON AN AREA STABILIZED WITH CRUSHED STONE AND PROVISIONS THAT INTERCEPT THE SEDIMENT-LADEN RUNOFF AND D DIRECT IT INTO AN APPROVED SEDIMENT TRAP OR SEDIMENT BASIN.
4. ON SITES WHERE THE GRADE TOWARD THE PAVED AREA IS GREATER THAN 2%, A DIVERSION RIDGE 6 TO 8 INCHES HIGH WITH 3:1 SIDE SLOPES SHALL BE CONSTRUCTED ACROSS THE FOUNDATION APPROXIMATELY 15 FEET ABOVE THE ROAD.
5. THE GEOTEXTILE UNDERLINER MUST BE PLACED THE FULL LENGTH AND WIDTH OF THE ENTRANCE. GEOTEXTILE SELECTION SHALL BE BASED ON AASHTO M288-98 SPECIFICATION:
   - FOR SUBGRADES WITH A CBR GREATE THAN OR EQUAL TO 3 OR SHEAR STRENGTH GREATER THAN 90 kPa, GEOTEXTILE MUST MEET REQUIREMENTS OF SECTION AASHTO M288-96 SECTION 7.3, SEPARATION REQUIREMENTS.
   - FOR SUBGRADES WITH A CBR BETWEEN 1 AND 3 OR SHEAR STRENGTH BETWEEN 30 AND 90 kPa, GEOTEXTILE MUST MEET REQUIREMENTS OF SECTION AASHTO M288-96 SECTION 7.4, STABILIZATION REQUIREMENTS.
6. THE EXIT SHALL BE MAINTAINED IN A CONDITION WHICH WILL PREVENT TRACKING OR FLOW OF MUD ONTO PUBLIC RIGHTS-OF-WAY. THIS MAY REQUIRE PERIODIC TOP DRESSING WITH 1.5-3.5 INCH STONE, AS CONDITIONS DEMAND AND REPAIR AND/OR CLEANOUT OF ANY STRUCTURES TO TRAP SEDIMENT. ALL MATERIALS SPILLED, DROPPED, WASHED, OR TRACKED FROM VEHICLES OR SITE ONTO ROADWAYS OR INTO STORM DRAINS MUST BE REMOVED IMMEDIATELY.
7. IT IS RECOMMENDED THAT THE ENTRANCE AREA BE EXCAVATED TO A DEPTH OF 3 INCHES AND BE CLEARED OF ALL VEGETATION AND ROOTS.

Co CONSTRUCTION EXIT

NOT TO SCALE

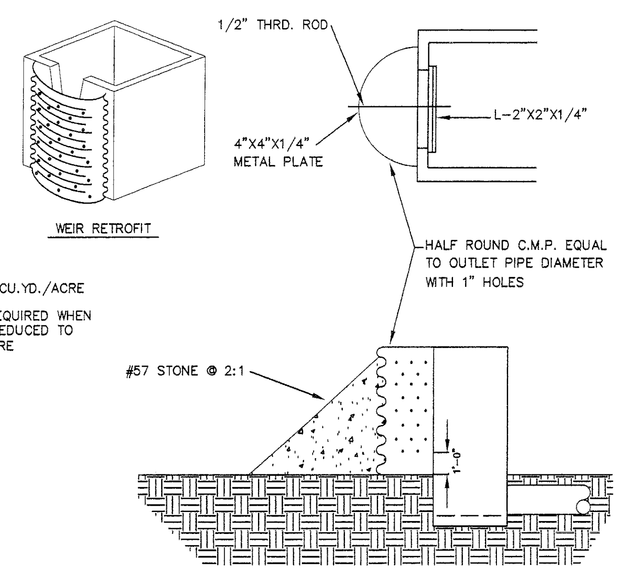

NOTES:

1. STORAGE: 67 CU.YD./ACRE
2. CLEAN OUT REQUIRED WHEN STORAGE IS REDUCED TO 27 CU.YD./ACRE

TEMPORARY SEDIMENT BASIN #1 (AT POND #1)
MAX STORAGE ELEV. = 1036.18
MAX STORAGE VOL. = 5835.24 CU FT
CLEANOUT ELEV. = 1034.88
CLEANOUT VOL. = 1918.62 CU FT
TOP ELEV. = 1042.92
OVERFLOW WEIR ELEV. = 1041.42
WEIR ELEV. =1040.25
WEIR LENGTH =0.75'
STONE FILTER RING ELEV. = 1039.34

TEMPORARY SEDIMENT BASIN #2 (AT POND #2)
MAX STORAGE ELEV. = 1045.63
MAX STORAGE VOL. = 19700.09 CU FT
CLEANOUT ELEV. = 1044.26
CLEANOUT VOL. = 7009.2 CU FT
TOP ELEV. =1049.81
OVERFLOW WEIR ELEV. = 1048.31
WEIR ELEV. =1043.70
WEIR LENGTH = 0.5'
STONE FILTER RING ELEV. = 1045.91

Rt RETROFITTING SEDIMENT TRAP AT OUTLET STRUCTURE

NOT TO SCALE

REVISION	DATE
ADDENDUM 3	
ISSUED FOR BID	8-09-01
CITY COMMENTS	11-03-01
COUNTY COMMENTS	12-6-00

HDR/WLJorden
ENGINEERS SURVEYORS PLANNERS
200 NORTH COBB PKWY, BLDG 100, STE 154
MARIETTA, GEORGIA 30062
(678)784-4000 FAX (678)784-4040

GEORGIA REGISTERED NO. 25953 PROFESSIONAL ENGINEER TODD A. KORN

EROSION & SEDIMENT CONTROL DETAILS
DOUGLAS COUNTY MULTI-MODAL TRANSPORTATION CENTER

DATE	7-14-00
SHEET	C12.0
FILE NO.	10138-001
CHECKED BY	D.E.
	P.M.
	QA/QC
	D.M.

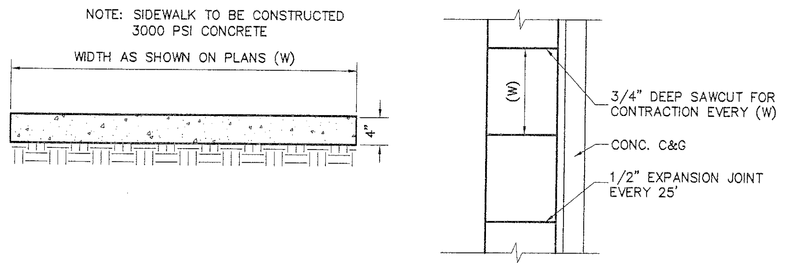

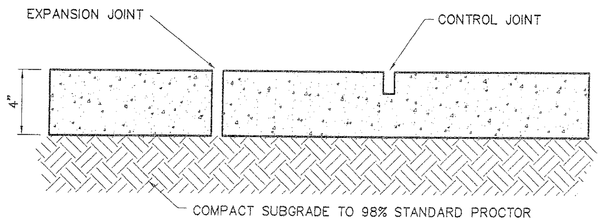

NOTES:
1. EXPANSION JOINTS REQUIRED AT ALL STRUCTURES, MAX. SPACING TO BE 25'.
2. CONTROL JOINTS TO BE SPACED EVERY W.
3. 3000 P.S.I. CONCRETE, 2" SLUMP, WITH LIGHT BROOM FINISH.

CONCRETE SIDEWALK DETAIL
NOT TO SCALE

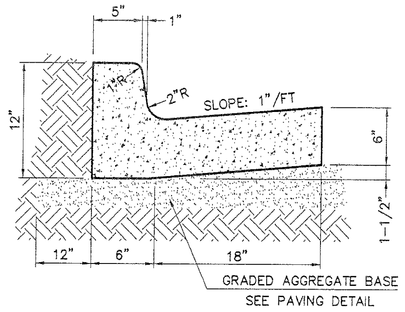

A. CATCHING CURB AND GUTTER

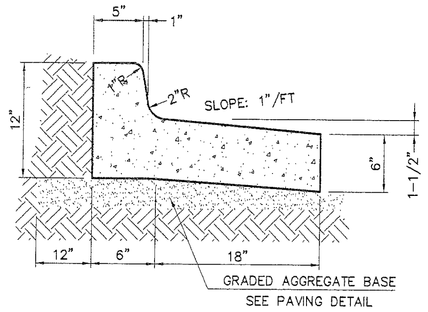

B. SPILLING CURB AND GUTTER

NOTES:
1. COMPACT SUBGRADE TO 98% STANDARD PROCTOR.
2. 3000 P.S.I. HIGH EARLY STRENGTH CONCRETE, 2" SLUMP, W/ SMOOTH FINISH.
3. EXPANSION JOINTS REQUIRED AT ALL STRUCTURES AND CURB RETURNS. MAX. DIST BETWEEN CONTROL JOINTS – 25'.

STANDARD 6" x 12" x 24" CONCRETE CURB AND GUTTER
NOT TO SCALE

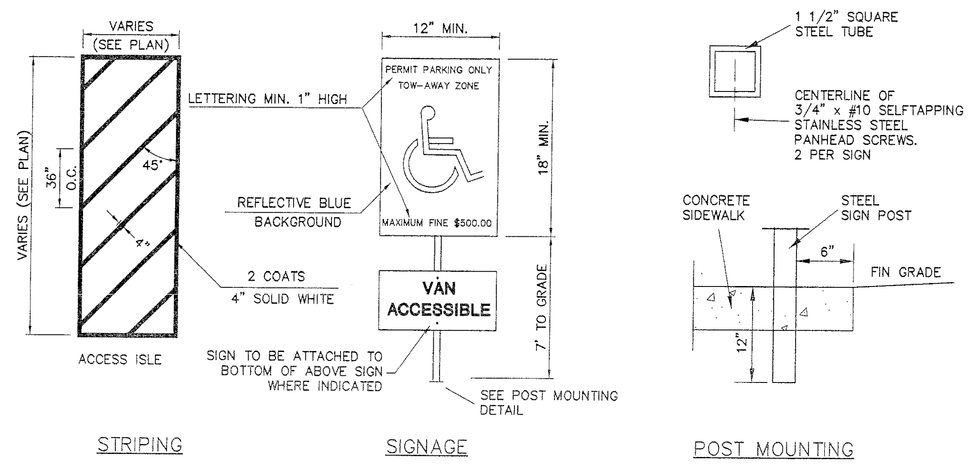

HANDICAP SPACE STRIPING, SIGNAGE AND POST MOUNTING DETAIL
NOT TO SCALE

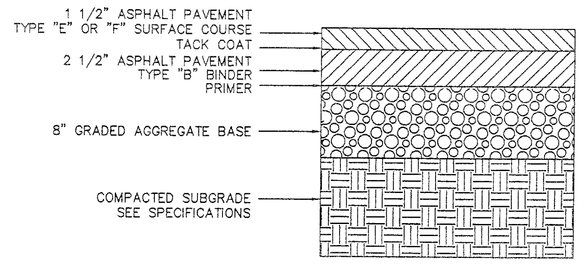

HEAVY DUTY ASPHALTIC CONCRETE PAVEMENT
NOT TO SCALE

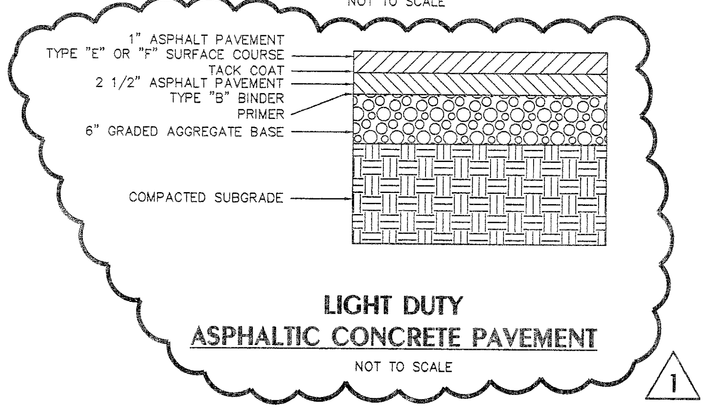

LIGHT DUTY ASPHALTIC CONCRETE PAVEMENT
NOT TO SCALE

1

1. 3000 P.S.I. CONCRETE, 5" SLUMP WITH SMOOTH FINISH.
2. EXPANSION JOINTS REQUIRED AT ALL STRUCTURES AND CURB RETURNS, MAXIMUM DISTANCE BETWEEN EXPANSION JOINTS – 25'.

CONCRETE FLUME SECTION
NOT TO SCALE

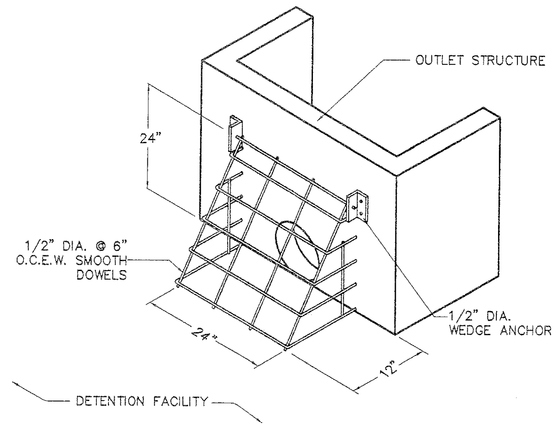

REBAR TRASHRACK AT OUTLET STRUCTURE
NOT TO SCALE

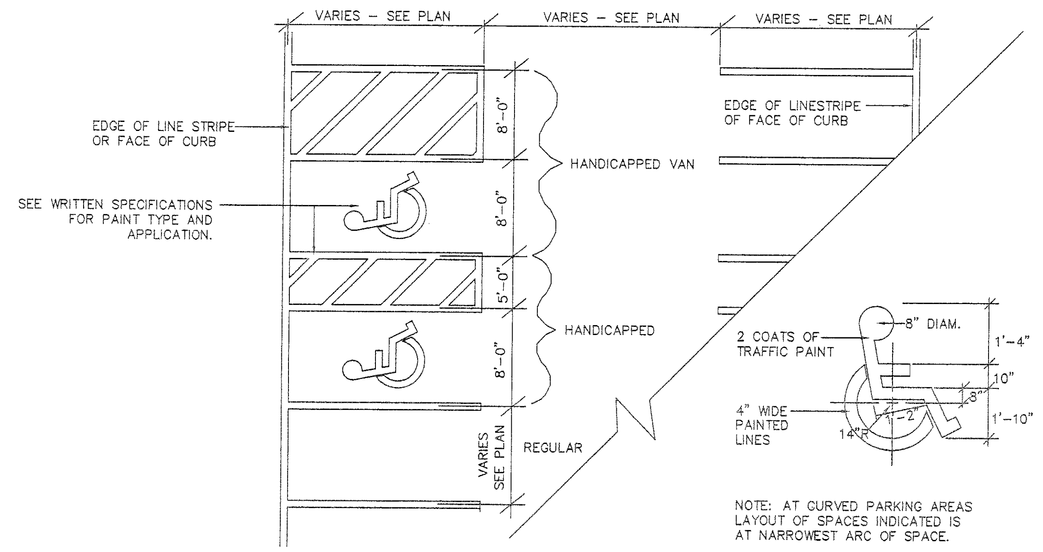

NOTE: AT CURVED PARKING AREAS LAYOUT OF SPACES INDICATED IS AT NARROWEST ARC OF SPACE.

HANDICAP PARKING SPACE DETAIL
NOT TO SCALE

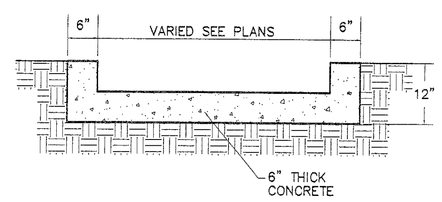

CONCRETE FLUME SECTION
NOT TO SCALE

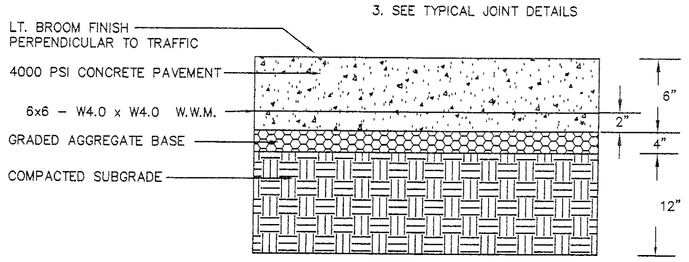

NOTES:
1. EXPANSION JOINTS MAX. 15' O.C., E.W.
2. CORE JOINTS TO BE 1/4" DEPTH OF SLAB
3. SEE TYPICAL JOINT DETAILS

TYPICAL CONCRETE PAVEMENT SECTION
NOT TO SCALE

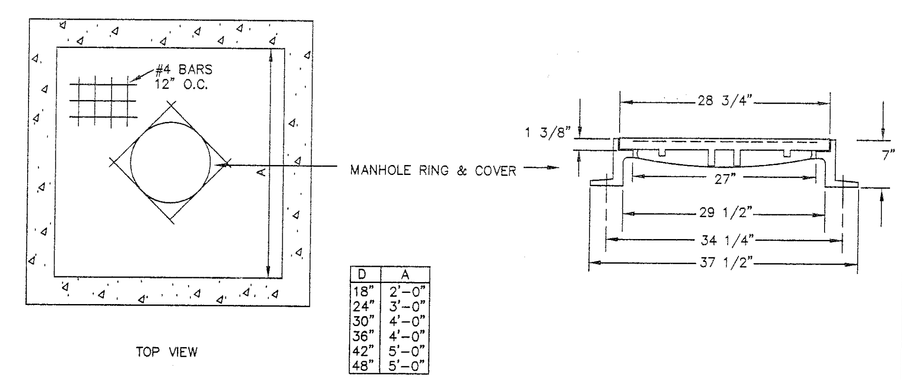

D	A
18"	2'-0"
24"	3'-0"
30"	4'-0"
36"	4'-0"
42"	5'-0"
48"	5'-0"

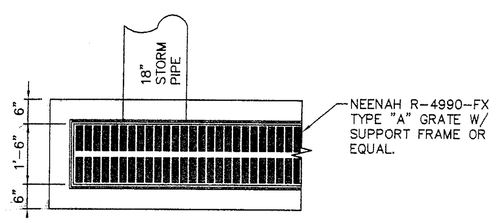

PLAN VIEW

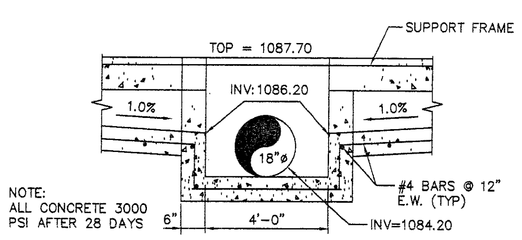

NOTE:
ALL CONCRETE 3000 PSI AFTER 28 DAYS

PROFILE VIEW

TRENCH DRAIN DETAIL @ B6
NOT TO SCALE

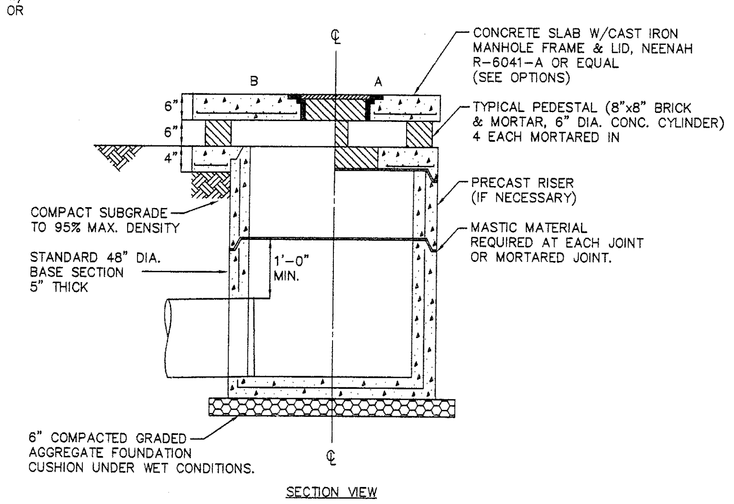

SECTION VIEW

PEDESTAL TOP DROP INLET
NOT TO SCALE

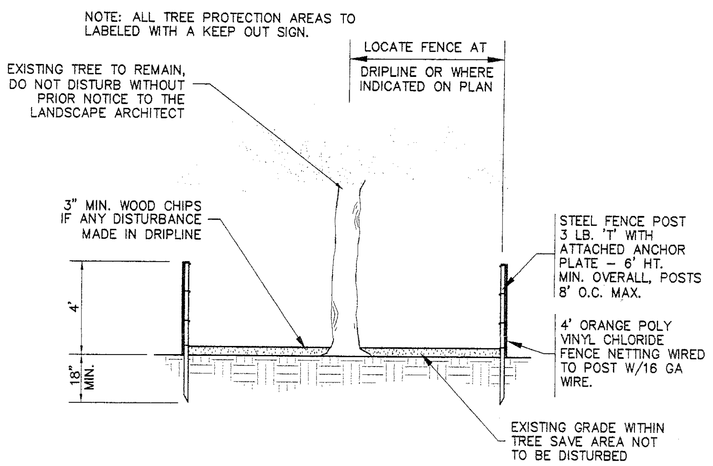

TREE PROTECTION FENCING

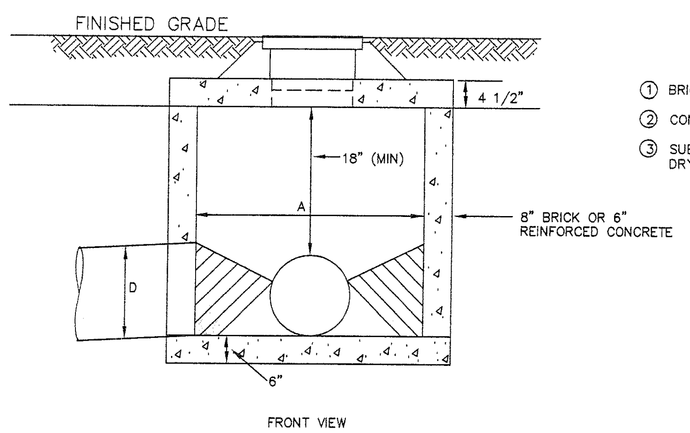

NOTES
1. BRICK OR MASONRY INVERT REQUIRED (ROWLOCK)
2. CONCRETE SHALL BE 3000 PSI
3. SUBGRADE TO BE COMPACTED TO 95% MAX DRY DENSITY PER STANDARD PROCTOR

JUNCTION BOX
NOT TO SCALE

REVISION	DATE
ADDENDUM 3	
ISSUED FOR BID	8-09-01
COUNTY COMMENTS	4-10-01
COUNTY COMMENTS	01-03-01
COUNTY COMMENTS	12-6-00

HR/WLJorden
ENGINEERS SURVEYORS · PLANNERS
200 N. COBB PKWY., BLDG 100, STE. 134
MARIETTA, GEORGIA 30062
(770)514-1003 FAX (770)514-0040

GEORGIA REGISTERED NO. 25893 PROFESSIONAL ENGINEER TODD A. KORN

7-9-01

CONSTRUCTION DETAILS
DOUGLAS COUNTY MULTI-MODAL TRANSPORTATION CENTER

CHECKED BY	D.E.
	P.M.
	QA/QC
	D.M.
DATE	7-14-00
SHEET	C13.0
FILE NO.	10138-001

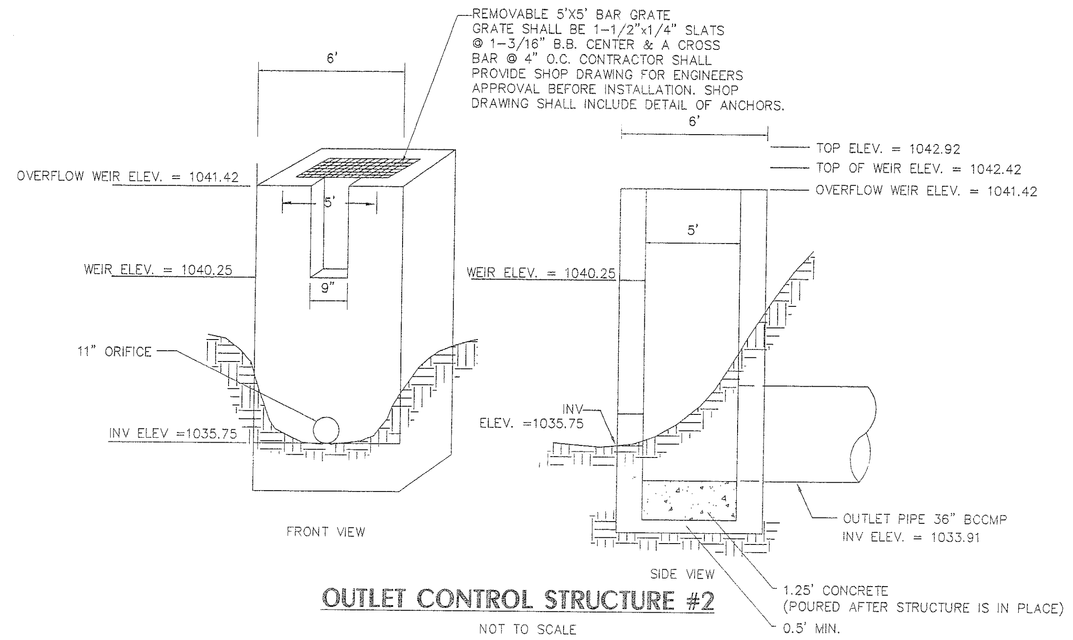

OUTLET CONTROL STRUCTURE #2

NOT TO SCALE

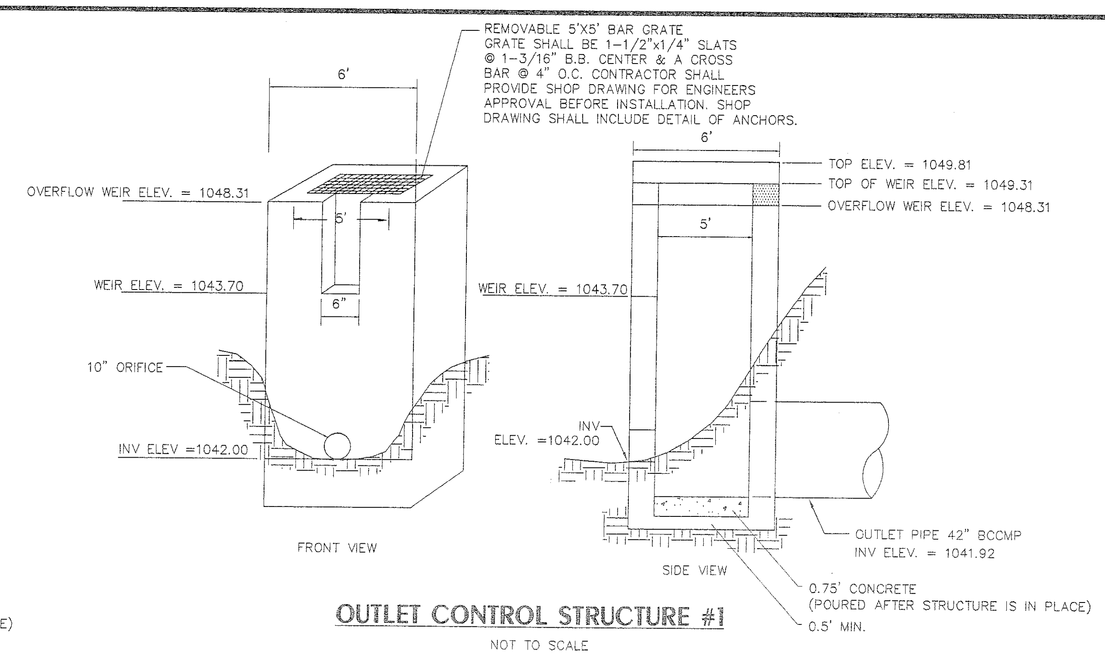

OUTLET CONTROL STRUCTURE #1

NOT TO SCALE

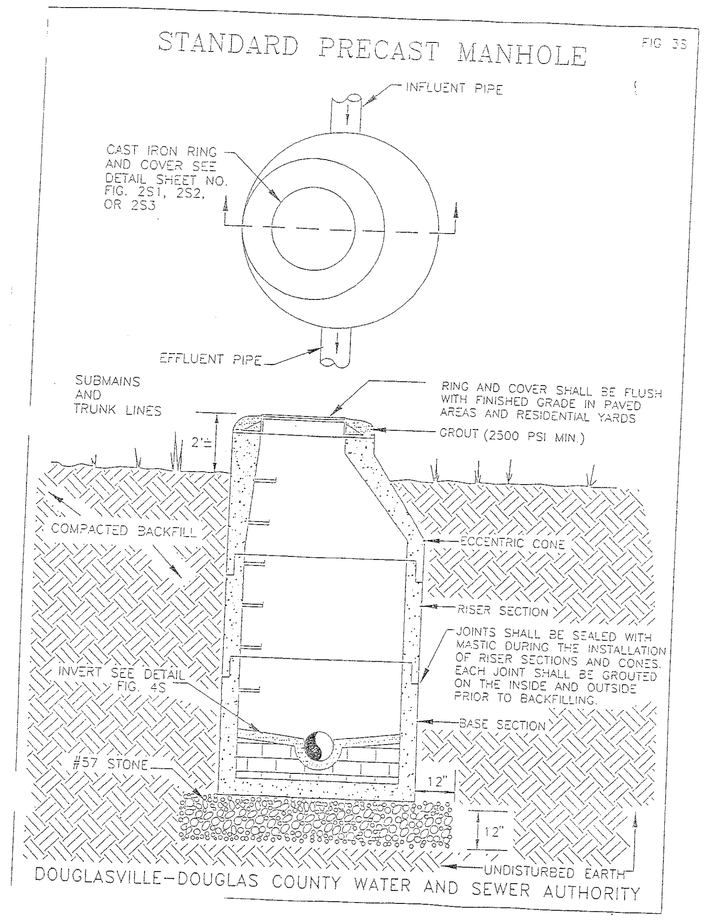

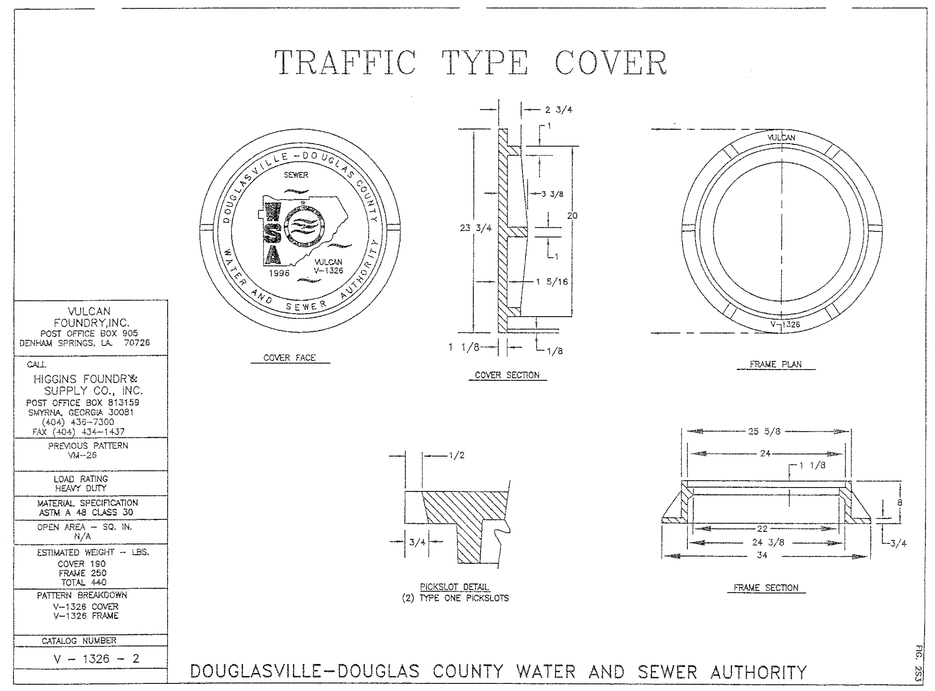

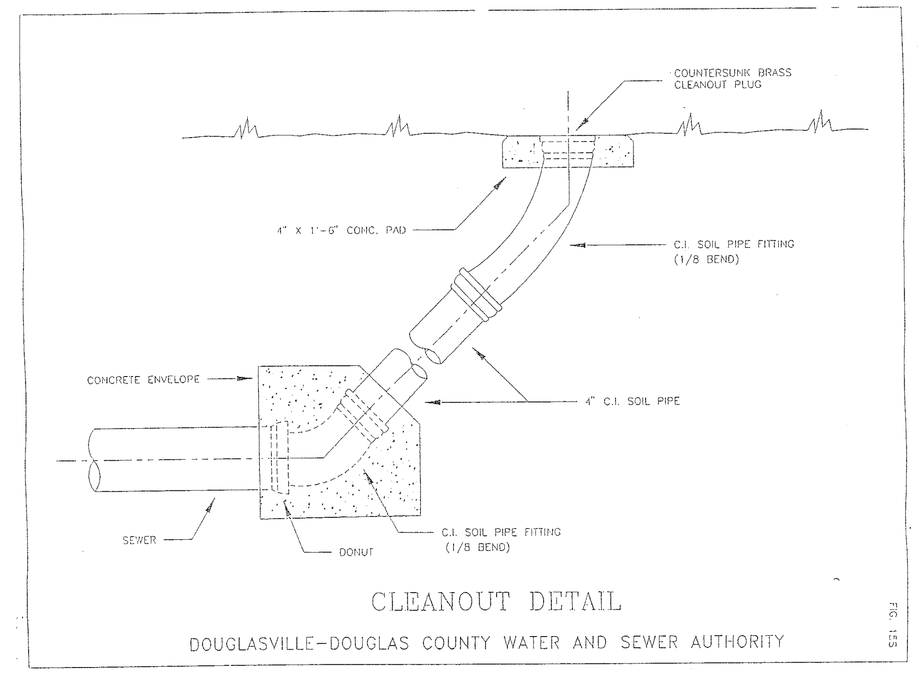

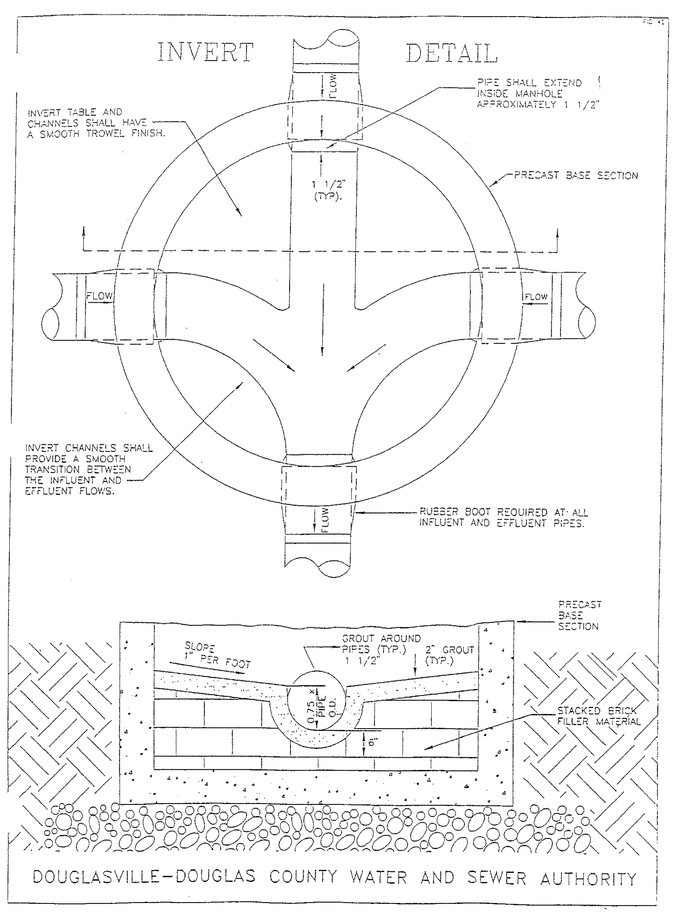

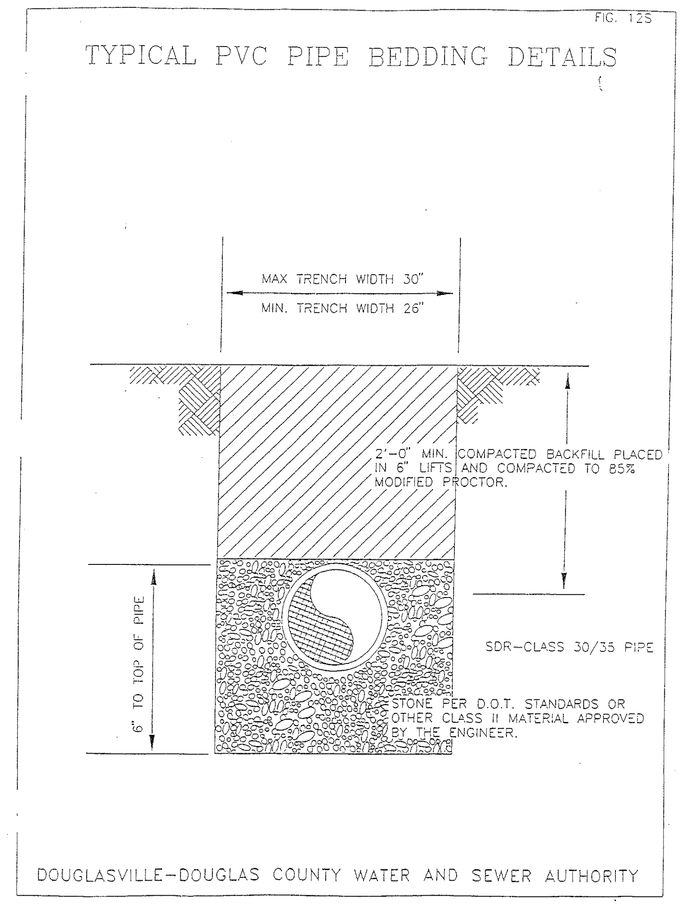

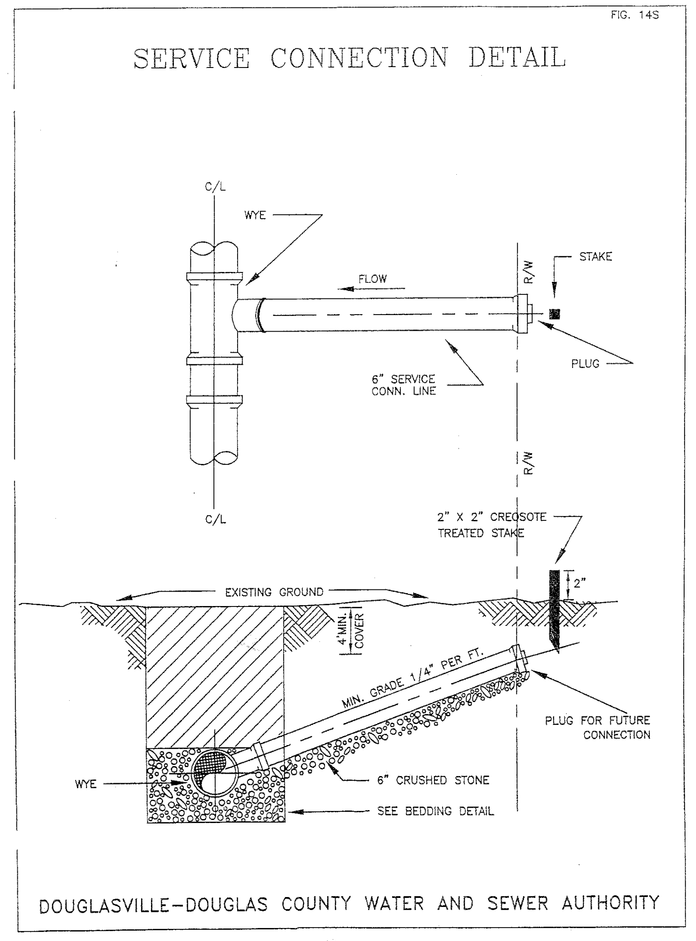

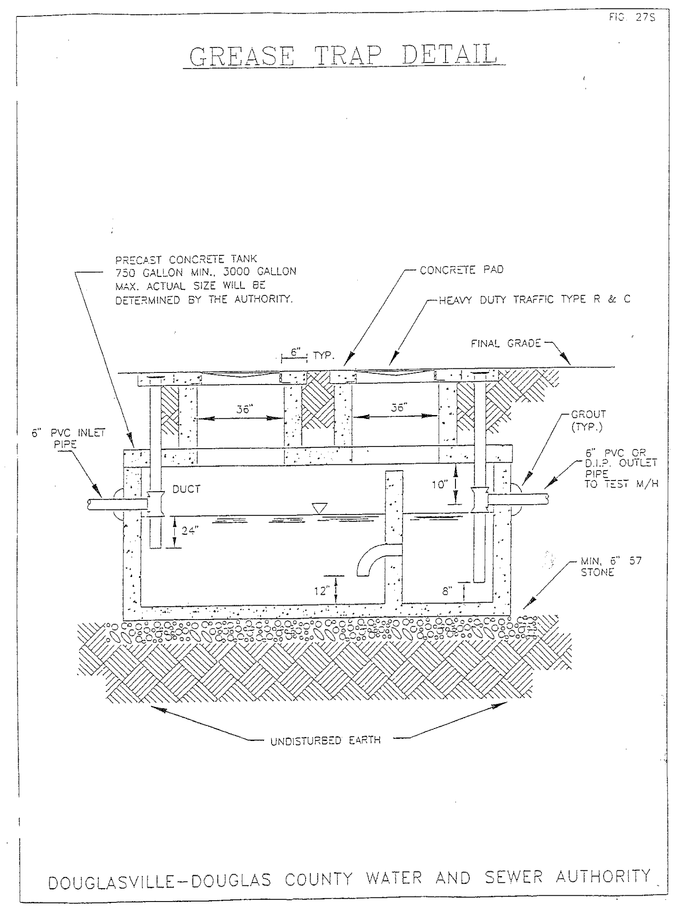

A	8-9-03	ADDENDUM 1
A	4-10-01	ISSUED FOR BID
A	01-03-01	COUNTY COMMENTS
A	12-6-00	COUNTY COMMENTS
	DATE	REVISION

HDR/WLJorden
ENGINEERS SURVEYORS · PLANNERS
200 N. COBB PKWY., BLDG 100, STE. 134
MARIETTA, GEORGIA 30062
(678)784-4000 FAX (678)784-4040

GEORGIA REGISTERED NO. 25893 PROFESSIONAL ENGINEER TODD A. KORN

7-2-01

CONSTRUCTION DETAILS
DOUGLAS COUNTY MULTI-MODAL TRANSPORTATION CENTER

CHECKED BY	
D.E.	
P.M.	
QA/QC	
D.M.	
DATE	7-14-00
SHEET	C13.1
FILE NO.	10138-001

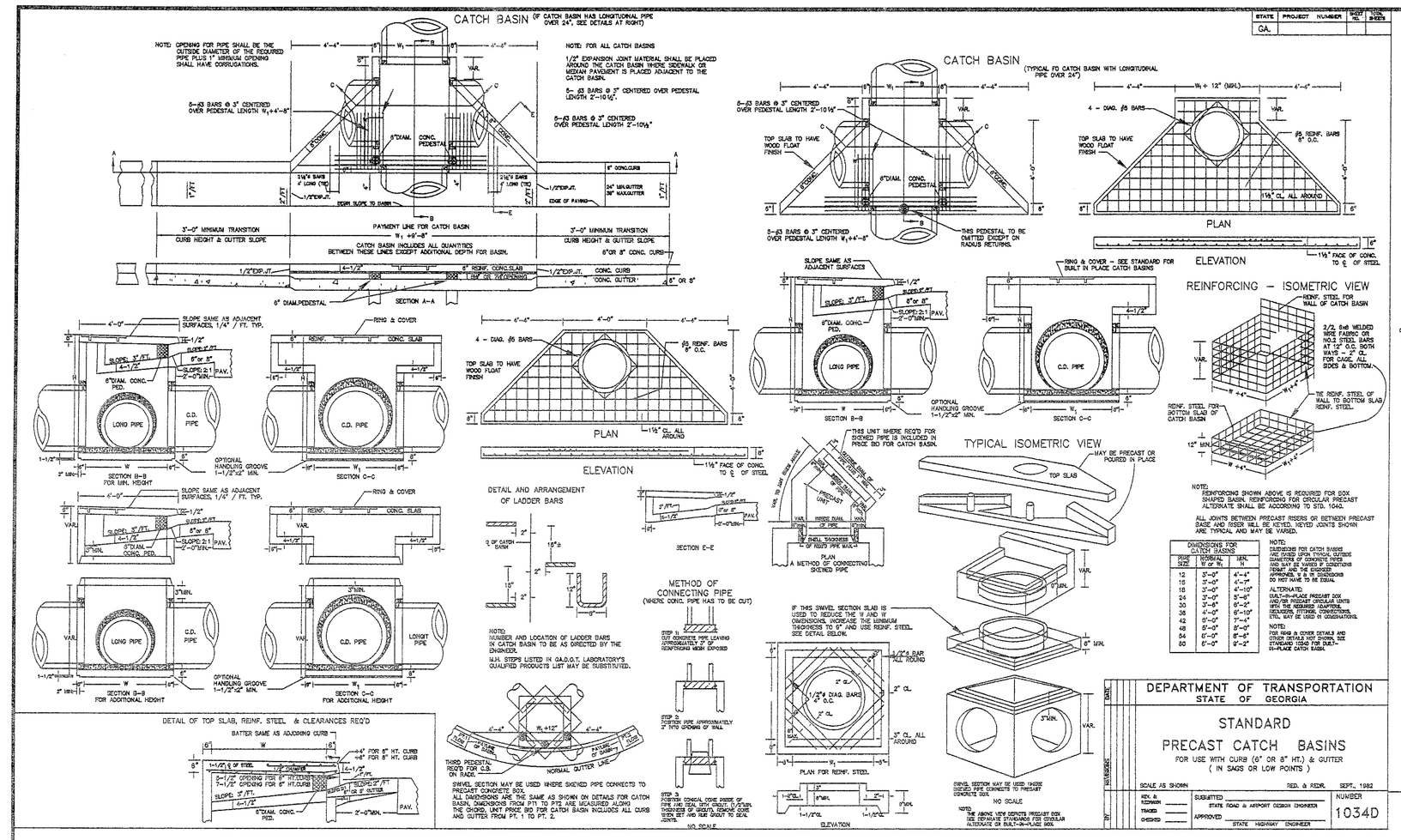

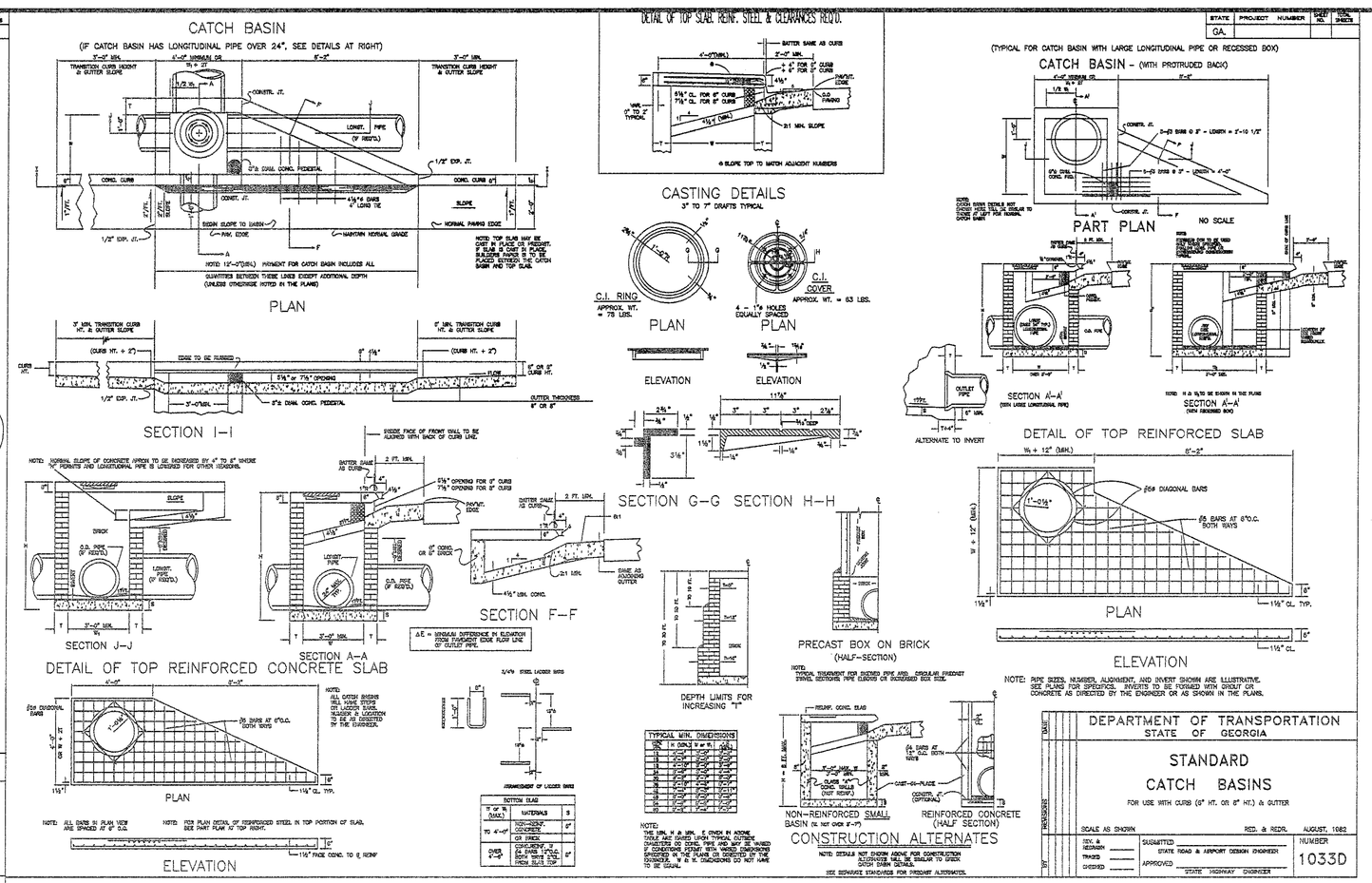

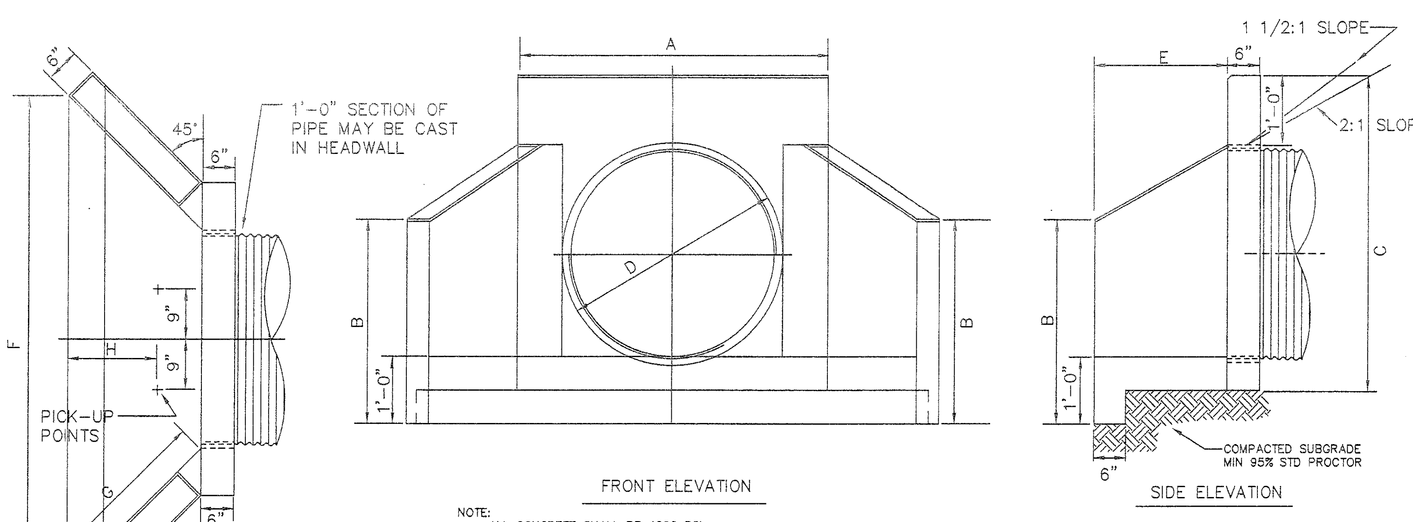

NOTE:
ALL CONCRETE SHALL BE 4000 PSI
REINF. STEEL SHALL BE 1/2" Ø OF
INTERMEDIATE GRADE. PLACE REINF.
2" MIN. CL. CHAMFER ALL EXPOSED
EDGES 3/4".

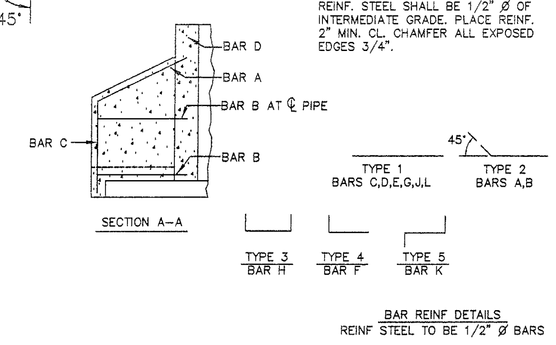

VARIABLE DIMENSIONS (CONCRETE PIPE)												
CU YDS CONC	INSIDE DIA PIPE	AREA PIPE OPENING	A	B	C	D	E	F	G	H	WT	BASE AREA
0.43	18"	1.76	3'-5"	2'-4"	3'-4½"	2'-0"	1'-5"	4'-10"	2'-0"	1'-0¾"	1753	8.30
0.50	21"	2.40	3'-8½"	2'-6"	3'-8"	2'-3½"	1'-6"	5'-3½"	2'-1½"	1'-0¾"	2020	9.40
0.51	24"	3.14	4'-0"	2'-9"	3'-11"	2'-7"	1'-8"	5'-11"	2'-4½"	1'-1¾"	2083	11.80
0.79	30"	4.91	4'-6½"	3'-1"	4'-5½"	3'-1½"	2'-0"	7'-1½"	2'-10"	1'-3⅜"	3162	15.10
1.00	36"	7.07	5'-1"	3'-5"	5'-0"	3'-8"	2'-4"	8'-0"	3'-3½"	1'-6"	4089	19.60

VARIABLE DIMENSIONS (METAL PIPE)												
CU YDS CONC	INSIDE DIA PIPE	AREA PIPE OPENING	A	B	C	D	E	F	G	H	WT	BASE AREA
0.38	18"	1.76	3'-2"	2'-3"	3'-2"	1'-9"	1'-4"	4'-5"	1'-10½"	0'-11¾"	1549	7.34
0.44	21"	2.40	3'-5"	2'-5"	3'-5"	2'-0"	1'-5"	4'-10"	2'-0"	1'-0¾"	1778	8.32
0.52	24"	3.14	3'-8"	2'-7"	3'-8"	2'-3"	1'-7"	5'-5"	2'-3"	1'-1¾"	2108	9.90
0.70	30"	4.91	4'-2"	2'-11"	4'-2"	2'-9"	1'-11"	6'-7"	2'-8½"	1'-3¾"	2834	13.50
0.91	36"	7.07	4'-8"	3'-3"	4'-8"	3'-3"	2'-3"	7'-9"	3'-2¾"	1'-5⅜"	3678	17.65

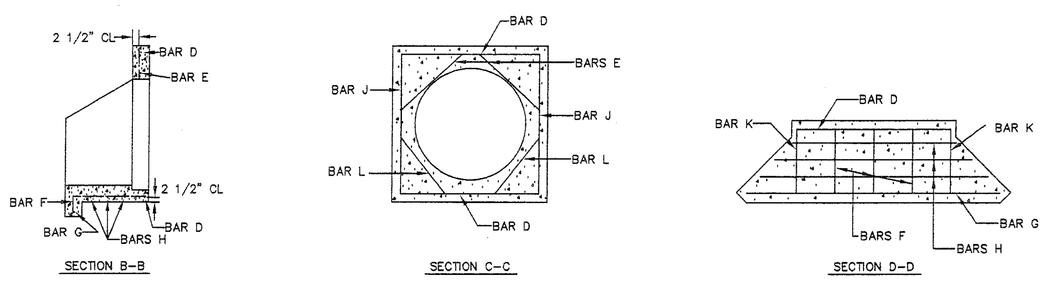

CONCRETE HEADWALL

NOT TO SCALE

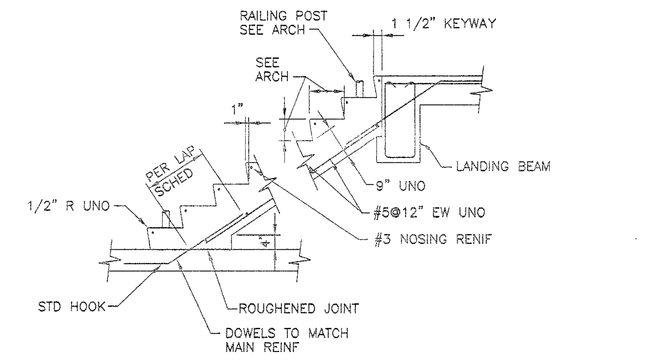

CONCRETE STAIRS

03311-10

STAIR_A

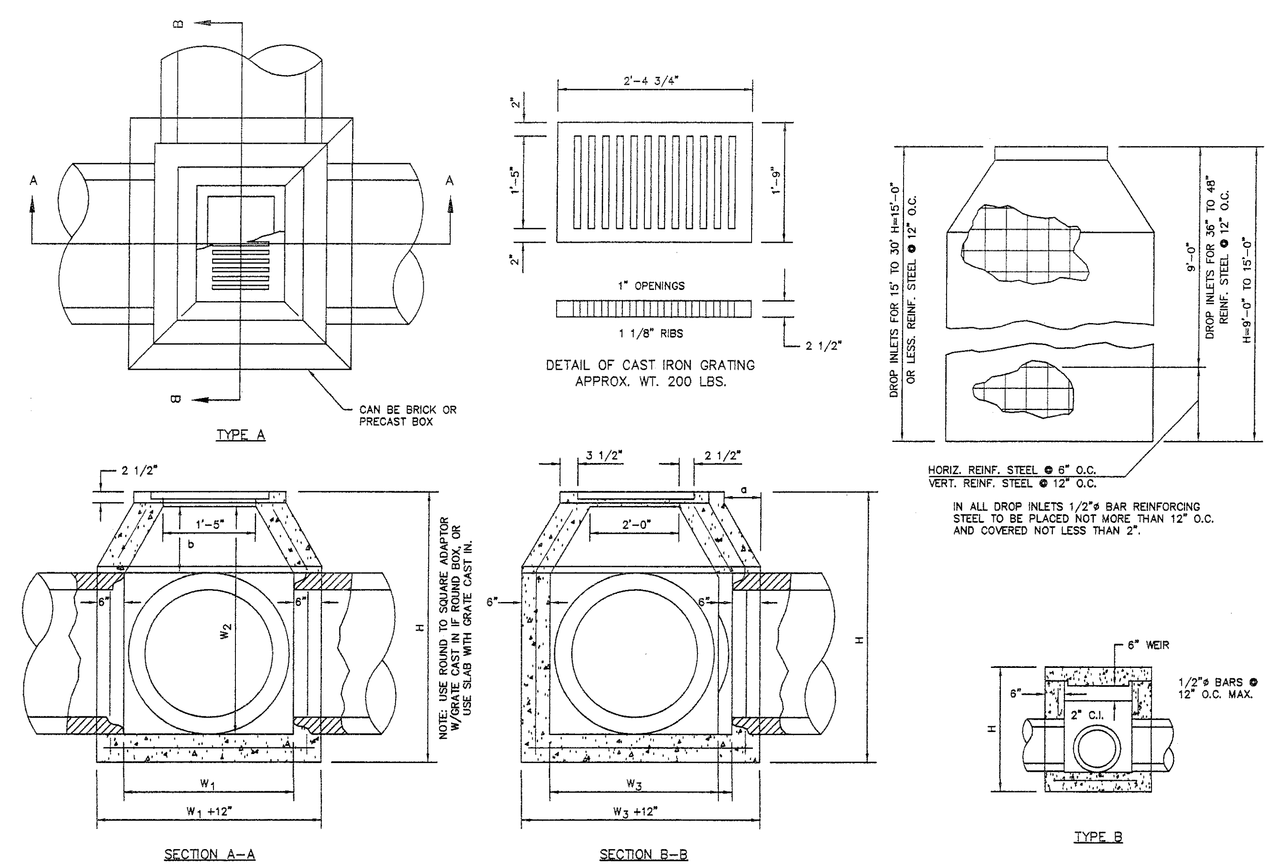

NOTE: PAVED INVERTS REQUIRED AT ALL JUNCTION BOXES AND DROP INLETS.

STANDARD DROP INLET WITH GRATE

NOT TO SCALE

NOTE:

THE GEORGIA DOT STANDARD DETAILS SHOWN WERE DIGITALLY REPRODUCED BY HDR/WLJORDEN, INC. IN THE EVENT OF ANY DISCREPANCIES, THE GEORGIA DOT DETAIL AS SHOWN IN THE GEORGIA DOT STANDARD DETAILS BOOK, LATEST EDITION SHALL APPLY. CONTRACTOR SHALL OBTAIN A COPY OF AND BECOME FAMILIAR WITH GEORGIA DOT STANDARD DETAILS BOOK.

REVISION	DATE
ADDENDUM 1	
ISSUED FOR BID	8-03-01
COUNTY COMMENTS	4-10-01
COUNTY COMMENTS	01-03-01
COUNTY COMMENTS	12-6-00

HDR/WLJorden
ENGINEERS · SURVEYORS · PLANNERS
200 N. COBB PKWY., BLDG 100, STE. 134
MARIETTA, GEORGIA 30062
(678)794-4000 FAX (678)794-4040

GEORGIA REGISTERED NO. 25853 PROFESSIONAL ENGINEER TODD A. KORN

CONSTRUCTION DETAILS
DOUGLAS COUNTY MULTI-MODAL TRANSPORTATION CENTER

CHECKED BY: D.E. P.M. QA/QC D.M.

DATE 7-14-00

SHEET C13.2

FILE NO. 10138-001

FIG. 6

BEDDING DETAILS

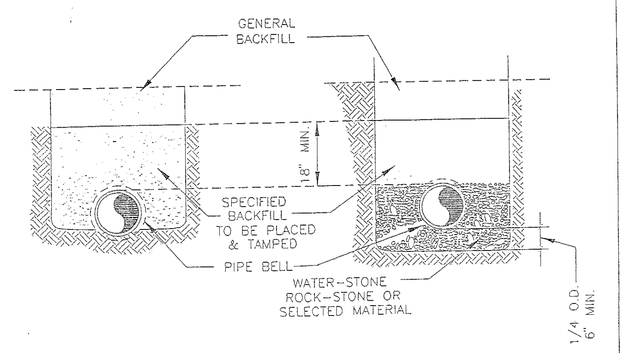

STANDARD EARTH
C-1

WET TRENCH OR ROCK
C-2

DOUGLASVILLE-DOUGLAS COUNTY WATER AND SEWER AUTHORITY

MAY 15 1995

FIG. 7

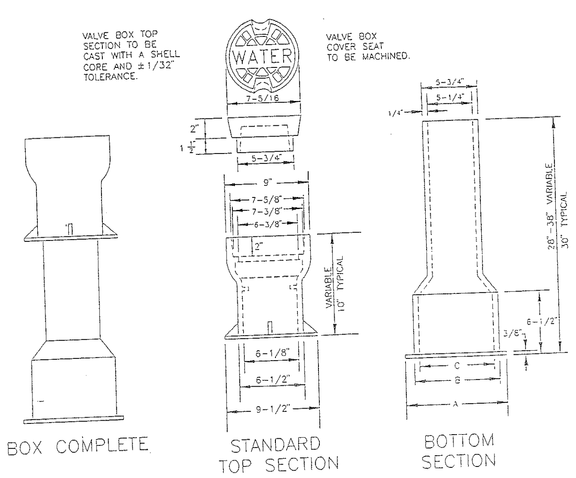

BOX COMPLETE

STANDARD TOP SECTION

BOTTOM SECTION

24" x 24" CONCRETE PAD AROUND VALVE BOX WHEN SET IN GRASS.

BOTTOM SECTION	A	B	C
4"-8"	9"	8"	7"
8"	9-1/2"	8-1/2"	7-1/2"
10"-12"	10-1/4"	9"	8"

NOTES:

1. UNLESS NOTED OTHERWISE, CAST IRON SHALL CONFORM TO ASTM SPECIFICATIONS A48 LATEST REVISION FOR CLASS 20 GREY IRON CASTINGS.
2. CASTINGS SHALL BE TRUE AND FREE OF HOLES. THEY SHALL BE CLEANED ACCORDING TO GOOD FOUNDRY PRACTICE AND GROUND AS NEEDED TO REMOVE FINS AND ROUGH PLACES.
3. FINISHED CASTINGS SHALL BE COATED INSIDE AND OUTSIDE WITH COAL TAR PITCH VARNISH AS INDICATED IN AWWA SPECIFICATIONS C110 LATEST REVISION. COATING MAY BE APPLIED COLD AND SHALL THOROUGHLY COVER ALL METAL SURFACES. FINISHED COATING SHALL BE SMOOTH, GLOSSY, NOT BRITTLE WHEN COLD, NOT STICKY WHEN EXPOSED TO THE SUN, AND SHALL ADHERE TO THE METAL AT ALL TEMPERATURES.
4. WHEN COATING IS COMPLETE, LID SHALL FIT SNUGLY WITHOUT ROCKING.

TYPICAL 4"-12" VALVE BOX ASSEMBLIES

DOUGLASVILLE-DOUGLAS COUNTY WATER AND SEWER AUTHORITY

MAY 15 1995

FIG. 10

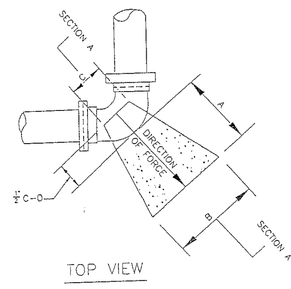

TOP VIEW

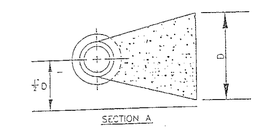

SIDE VIEW

DESIGN DATA
DIMENSION OF THRUST BLOCK IN FEET BASED ON 2000 POUNDS PER SQUARE FOOT SOIL BEARING PRESSURE AND 250 PER SQUARE INCH TEST PRESSURE. ACTUAL INSIDE DIAMETER OF DUCTILE IRON PIPE, CLASS 2 USED AS STANDARD. CONCRETE SHALL BE CLASS A, 3000 PSI HIGH EARLY.

NOTE
SOIL CONDITIONS SHALL BE VERIFIED BEFORE THRUST BLOCK DESIGN IS IMPLEMENTED. CONCRETE FORMED SO THAT DOES NOT INTERFERE WITH BOLT/NUTS OR HOLES.

MINIMUM
DIMENSIONS IN FEET FOR CONCRETE BLOCKING

BEND	SIZE	A	B	C	D	VOLUME CUBIC YARD
11 1/4°	6"	1.0'	1.0'	7"	1.0'	0.03'
	8"	1.0'	1.25'	7"	1.0'	0.04'
	12"	1.0'	2.0'	11"	2.0'	0.01'
	16"	2.0'	3.0'	15"	2.0'	0.3'
	20"	2.0'	3.0'	19"	3.0'	0.5'
	24"	3.0'	4.0'	22"	3.0'	0.8'
22 1/2°	6"	1.0'	1.5'	7"	1.0'	0.04'
	8"	1.0'	2.0'	7"	2.0'	0.1'
	12"	2.0'	3.0'	11"	2.0'	0.3'
	16"	2.0'	4.0'	15"	3.0'	0.6'
	20"	3.0'	5.0'	19"	3.0'	1.0'
	24"	4.0'	6.0'	22"	4.0'	2.3'
45	6"	1.5'	2.0'	7"	1.5'	0.11'
	8"	2.0'	3.0'	7"	2.0'	0.3'
	12"	2.0'	4.0'	11"	3.0'	0.7'
	16"	3.0'	5.0'	15"	4.0'	1.4'
	20"	4.0'	6.0'	19"	5.0'	2.8'
	24"	5.0'	8.0'	22"	6.0'	5.0'
90	6"	1.5'	2.5'	7"	2.0'	0.2'
	8"	2.0'	3.0'	7"	3.0'	0.4'
	12"	4.0'	6.0'	11"	4.0'	2.1'
	16"	4.0'	7.0'	15"	5.0'	3.1'
	20"	6.0'	8.0'	19"	7.0'	5.3'
	24"	6.0'	10.0'	22"	8.0'	10.5'
TEES AND PLUGS	6"	1.5'	2.0'	7"	1.75'	0.13'
	8"	2.0'	3.0'	7"	2.0'	0.3'
	12"	2.0'	4.0'	11"	4.0'	0.8'
	16"	3.0'	5.0'	15"	5.0'	1.8'
	20"	4.0'	7.0'	19"	6.0'	3.9'
	24"	5.0'	8.0'	22"	7.0'	5.5'

TYPICAL HORIZONTAL THRUST BLOCK

DOUGLASVILLE-DOUGLAS COUNTY WATER AND SEWER AUTHORITY

MAY 15 1995

FIG. 16

3-WAY VALVE AND TEE INSTALLATION DETAIL

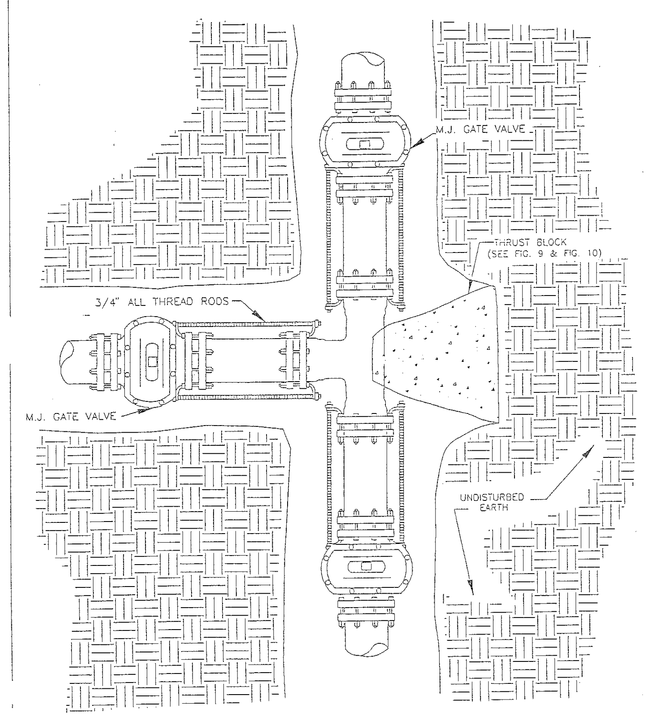

DOUGLASVILLE-DOUGLAS COUNTY WATER AND SEWER AUTHORITY

MAY 15 1995

STANDARD LOCATIONS FOR UNDERGROUND UTILITIES

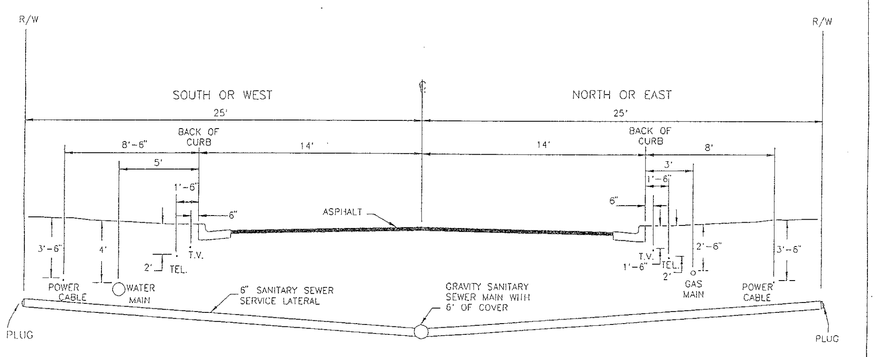

UTILITIES PROTECTION CENTER, INC.
404-623-4344 OR 1-800-282-7411

NOTES:

1. ON ALL UNDIVIDED TWO LANE STREETS, UTILITY LOCATIONS SHALL BE AT THE SAME DISTANCES FROM THE CENTER LINE AS SHOWN ABOVE.
2. POLES FOR OVERHEAD UTILITIES SHALL BE LOCATED A MINIMUM OF 20' FROM THE CENTER LINE OF THE ROAD ON TWO LANE STREETS.

DOUGLASVILLE-DOUGLAS COUNTY WATER AND SEWER AUTHORITY

MAY 15 1995

FIG. 1

5/8" THROUGH 2" METER AND BACKFLOW PREVENTER INSTALLATION

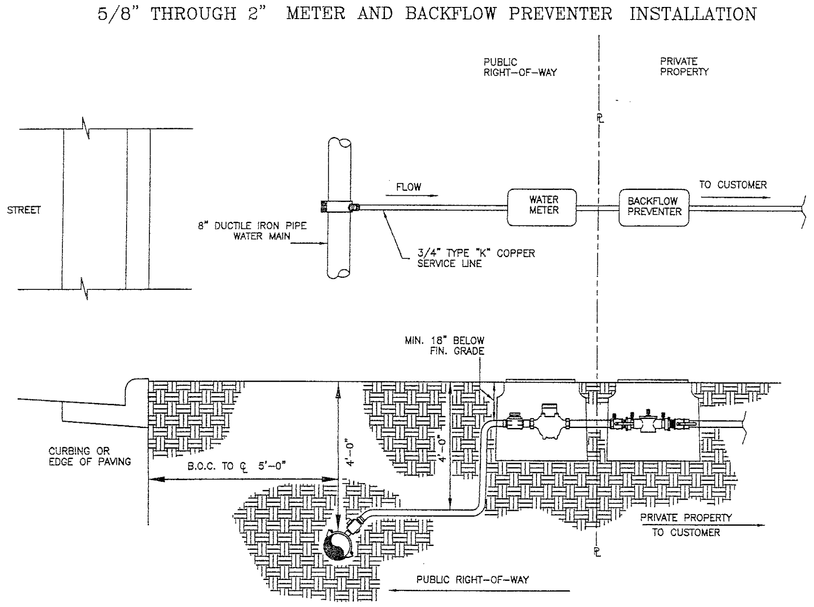

DOUGLASVILLE-DOUGLAS COUNTY WATER AND SEWER AUTHORITY

FIG. 12A

FIG. 3

FIRE HYDRANT DETAIL

UTILIZING HYDRANT TEE AND ANCHOR COUPLING

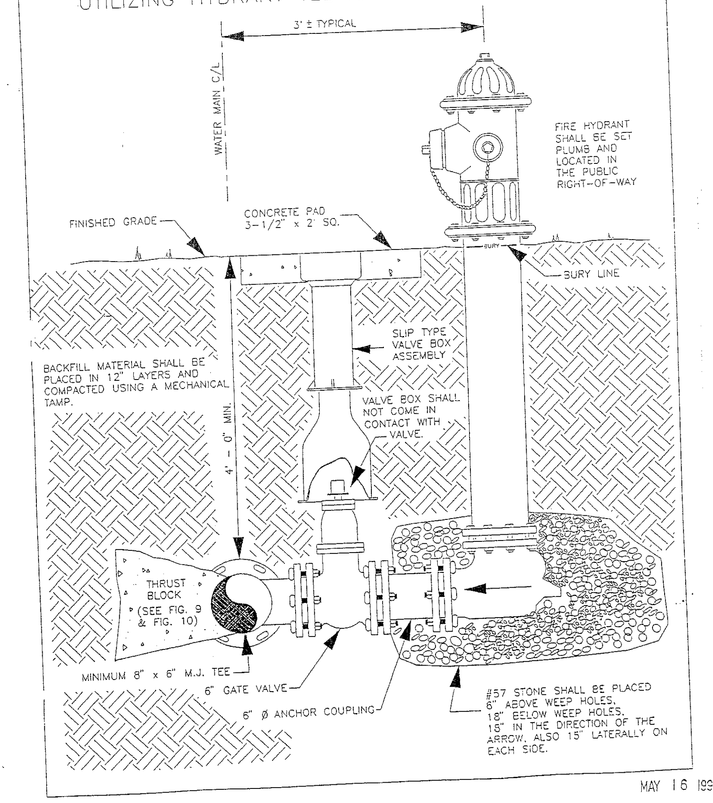

MAY 16 1995

FIG.9

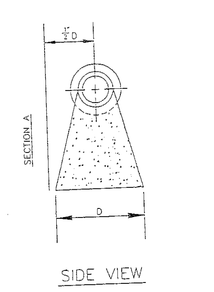

SIDE VIEW

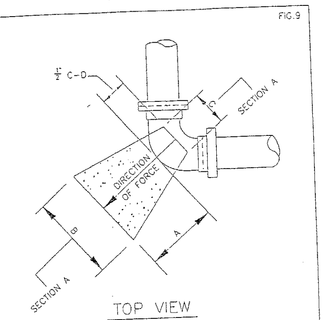

TOP VIEW

MINIMUM
DIMENSIONS IN FEET FOR CONCRETE BLOCKING

BEND	SIZE	A	B	C	D	VOLUME CUBIC YARD
11 1/4°	6"	1.0'	1.0'	7"	1.0'	0.03'
	8"	1.0'	1.25'	7"	1.0'	0.04'
	12"	1.0'	2.0'	11"	2.0'	0.01'
	16"	2.0'	3.0'	15"	2.0'	0.3'
	20"	2.0'	3.0'	19"	3.0'	0.5'
	24"	3.0'	4.0'	22"	3.0'	0.8'
22 1/2°	6"	1.0'	1.5'	7"	1.0'	0.04'
	8"	1.0'	2.0'	7"	2.0'	0.1'
	12"	2.0'	3.0'	11"	2.0'	0.3'
	16"	2.0'	4.0'	15"	3.0'	0.6'
	20"	3.0'	5.0'	19"	3.0'	1.0'
	24"	4.0'	6.0'	22"	4.0'	2.3'
45	6"	1.5'	2.0'	7"	1.5'	0.11'
	8"	2.0'	3.0'	7"	2.0'	0.3'
	12"	2.0'	4.0'	11"	3.0'	0.7'
	16"	3.0'	5.0'	15"	4.0'	1.4'
	20"	4.0'	6.0'	19"	5.0'	2.8'
	24"	5.0'	8.0'	22"	6.0'	5.0'
90	6"	1.5'	2.5'	7"	2.0'	0.2'
	8"	2.0'	3.0'	7"	3.0'	0.4'
	12"	4.0'	6.0'	11"	4.0'	2.1'
	16"	4.0'	7.0'	15"	5.0'	3.1'
	20"	6.0'	8.0'	19"	7.0'	5.3'
	24"	6.0'	10.0'	22"	8.0'	10.5'
TEES AND PLUGS	6"	1.5'	2.0'	7"	1.75'	0.13'
	8"	2.0'	3.0'	7"	2.0'	0.3'
	12"	2.0'	4.0'	11"	4.0'	0.8'
	16"	3.0'	5.0'	15"	5.0'	1.8'
	20"	4.0'	7.0'	19"	6.0'	3.9'
	24"	5.0'	8.0'	22"	7.0'	5.5'

DESIGN DATA
DIMENSION OF THRUST BLOCK IN FEET BASED ON 2000 POUNDS PER SQUARE FOOT SOIL BEARING PRESSURE AND 250 PER SQUARE INCH TEST PRESSURE. ACTUAL INSIDE DIAMETER OF DUCTILE IRON PIPE, CLASS 2 USED AS STANDARD. CONCRETE SHALL BE CLASS A, 3000 PSI HIGH EARLY.

NOTE
SOIL CONDITIONS SHALL BE VERIFIED BEFORE THRUST BLOCK DESIGN IS IMPLEMENTED. CONCRETE FORMED SO THAT DOES NOT INTERFERE WITH BOLT/NUTS OR HOLES.

TYPICAL DOWNWARD THRUST BLOCK

DOUGLASVILLE-DOUGLAS COUNTY WATER AND SEWER AUTHORITY

MAY 15 1995

FIG. 12

TYPICAL DETECTOR CHECK INSTALLATION

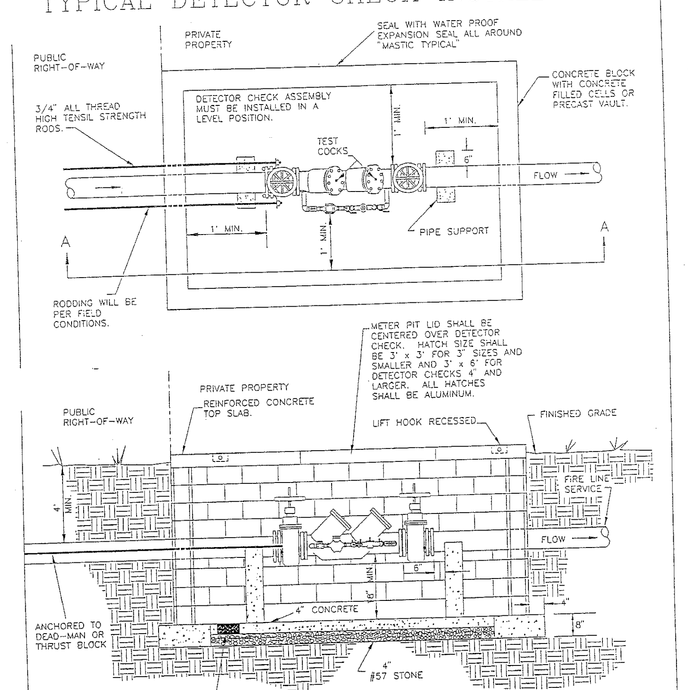

SECTION A-A

DOUGLASVILLE-DOUGLAS COUNTY WATER AND SEWER AUTHORITY

MAY 15 1995

REVISION	DATE
ADDENDUM 2 ISSUED FOR BID	
8-09-01	
4-10-01	COUNTY COMMENTS
01-03-01	COUNTY COMMENTS
12-6-00	

HDR/WLJorden
ENGINEERS SURVEYORS · PLANNERS
200 N. COBB PKWY. BLDG 100, STE. 134
MARIETTA, GEORGIA 30062
(678)784-4000 FAX (678)784-4040

GEORGIA REGISTERED NO. 25893 PROFESSIONAL ENGINEER TODD A. KORN

7-2-01

CONSTRUCTION DETAILS
DOUGLAS COUNTY MULTI-MODAL TRANSPORTATION CENTER

CHECKED BY: D.E. P.M. QA/QC D.M.

DATE 7-14-00

SHEET C13.3

FILE NO. 10138-001

VOLTAGE 208/120
PHASE 3 WIRE 4
BUS AMPS 400

PANEL LA1
MAIN AMPS 400

LOCATION MAIN ELEC.
MOUNTING SURFACE
MAIN BREAKER

DESCRIPTION	VOLT AMPS A	VOLT AMPS B	VOLT AMPS C	BRKR AMP	CKT P	BUS NO	BUS CONN.	CKT NO	BRKR AMP	VOLT AMPS C	VOLT AMPS B	VOLT AMPS A	DESCRIPTION
I.G. RECEPTACLES	800			20	1			2	20			600	RECEPTACLES
I.G. RECEPTACLES		800		20	1	3		4	20		800		RECEPTACLES
I.G. RECEPTACLES			800	20	1	5		6	20	1000			RECEPTACLES
I.G. RECEPTACLES	800			20	1	7		8	20			1000	RECEPTACLES
I.G. RECEPTACLES		800		20	1	9		10	20		1500		BLOWER
I.G. RECEPTACLES			800	20	1	11		12	20	1500			ATM
I.G. RECEPTACLES	800			20	1	13		14	20			1800	LIGHTS
RECEPTACLES		400		20	1	15		16	20		1900		LIGHTS
RECEPTACLES			1000	20	1	17		18	20	1600			LIGHTS
RECEPTACLES	1000			20	1	19		20	20			1800	LIGHTS
RECEPTACLES		1000		20	1	21		22	20		1800		LIGHTS
RECEPTACLES			600	20	1	23		24	20	1800			LIGHTS
RECEPTACLES	600			20	1	25		26	20			1700	LIGHTS
I.G. RECEPTACLES		800		20	1	27		28	20		1600		LIGHTS
I.G. RECEPTACLES			800	20	1	29		30	20	1300			LIGHTS
TB	500			20	1	31		32	20			800	LIGHTS
I.G. RECEPTACLES		1200		20	1	33		34	20		800		LIGHTS
I.G. RECEPTACLES			800	20	1	35		36	20	1200			LIGHTS
RECEPTACLES	800			20	1	37		38	20			1600	LIGHTS
RECEPTACLES		1500		20	1	39		40	20		1600		LIGHTS
RECEPTACLES			1500	20	1	41		42	20				SPARE
TOTALS	5300	6500	6300							8400	10000	9300	

VOLT AMPS
BUS A 14600
BUS B 16500
BUS C 14700
TOTAL 45800

REMARKS: FEED THRU LUGS. SECTION 1 OF 2. SERVICE ENTRANCE RATED PANEL. FULLY RATED PANEL FOR 26000 AVAILABLE FAULT CURRENT AMPS. PROVIDE ISOLATED GROUND BUS

VOLTAGE 208/120
PHASE 3 WIRE 4
BUS AMPS 400

PANEL LA2
MAIN AMPS 400

LOCATION MAIN ELEC.
MOUNTING SURFACE
MAIN LUGS

DESCRIPTION	VOLT AMPS A	VOLT AMPS B	VOLT AMPS C	BRKR AMP	CKT P	BUS NO	BUS CONN.	CKT NO	BRKR AMP	VOLT AMPS C	VOLT AMPS B	VOLT AMPS A	DESCRIPTION
FAC-1	800			20	1			2	3	50		5200	CU-1
FAC-2		800		20	1	3		4			5200		
FAC-3			800	20	1	5		6		5200			
FAC-4	800			20	1	7		8	3	50		5200	CU-2
RECIRC.		500		20	1	9		10			5200		
FANS			1000	20	1	11		12		5200			
COPIER	1500			20	2	13		14	3	50		5200	CU-3
		1500						16			5200		
VENDING			1000	30	1	17		18		5200			
RECEPTACLE	200			20	1	19		20	2	25		1600	CU-4
RECEPTACLE		200		20	1	21		22			1600		
RECEPTACLE			400	20	1	23		24					SPACE
RECEPTACLE	1500			20	1	25		26					SPACE
RECEPTACLE		1500		20	1	27		28					SPACE
RECEPTACLE			1500	20	1	29		30					SPACE
EWC	1500			20	1	31		32					SPACE
EWC		1500		20	1	33		34					SPACE
RECEPTACLE			1500	20	1	35		36					SPACE
SPARE				20	1	37		38	3	60			SURGE SUPPRESSOR
SPARE				20	1	39		40					
SPARE				20	1	41		42					
TOTALS	6300	6000	6200							15600	17200	17200	

VOLT AMPS
BUS A 23500
BUS B 23200
BUS C 21800
TOTAL 68500

REMARKS: SECTION 2 OF 2. SERVICE ENTRANCE RATED PANEL. FULLY RATED PANEL FOR 26000 AVAILABLE FAULT AVAILABLE FAULT CURRENT AMPS. PROVIDE ISOLATED GROUND BUS

LIGHTING FIXTURE SCHEDULE

TYPE	DESCRIPTION	MANUFACTURER
A	2'x4' RECESSED FLUORESCENT TROFFER WITH 3" DEEP SPECULAR, ANODIZED PARABOLIC LOUVER. (24 CELL) LAMPS: 4-32 WATT, T-8, 3500 DEGREE K BALLAST: 120 VOLT ELECTRONIC	LITHONIA "2PM3" SERIES METALUX MIDWEST COLUMBIA DAYBRITE
B	2 'x4' RECESSED FLUORESCENT TROFFER WITH ACRYLIC PRISMATIC, K-12 - MIN J125 LENS. LAMPS: 2-32 WATT, T-8, 3500 DEGREE K BALLAST: 120 VOLT ELECTRONIC	LITHONIA "SP" SERIES METALUX MIDWEST COLUMBIA DAYBRITE
C	2'x4' RECESSED FLUORESCENT TROFFER WITH 3" DEEP SPECULAR, ANODIZED PARABOLIC LOUVER. (12 CELL) LAMPS: 2-32 WATT, T-8, 3500 DEGREE K BALLAST: 120 VOLT ELECTRONIC	LITHONIA "PM3N" SERIES METALUX MIDWEST COLUMBIA DAYBRITE
D	SURFACE MOUNTED 4' STANDARD FLUORESCENT STRIP. WITH MINIMUM 14 GAUGE STEEL WIRE GUARD. LAMPS: 2-32 WATT, T-8, 3500 DEGREE K BALLAST: 120 VOLT ELECTRONIC	LITHONIA "C" SERIES METALUX MIDWEST COLUMBIA DAYBRITE
E	DOWNLIGHT, RECESSED SELF FLANGED, 6 " APERTURE CLEAR SPECULAR LOW IRIDESCENT REFLECTOR. LAMPS: 1-32 WATT, COMPACT FLUORESCENT, 3500 DEGREE K BALLAST: 120 VOLT ELECTRONIC	LITHONIA GOTHAM "AF" SERIES HALO CAPRI LIGHTOLIER
F	RECESSED PERIMITER WALL WASH WITH STAGGERED LAMPS. ULITIZE TELESCOPING END MODULE TO MAINTAIN CONTINUOUS LIGHTING EFFECT. LAMPS: 2-32 WATT, T-8, 3500 DEGREE K BALLAST: 120 VOLT ELECTRONIC	PRUDENTIAL P-80 LITHONIA LINEAR LEDALITE
G	DOWNLIGHT, RECESSED SELF FLANGED, 12 " APERTURE CLEAR SPECULAR LOW IRIDESCENT REFLECTOR. PROVIDE WITH GASKETED LENS. LAMPS: 1-175 WATT, METAL HALIDE BALLAST: 120 VOLT HPF	LITHONIA GOTHAM "LGH" SERIES HALO CAPRI LIGHTOLIER
H	FLUSH LENS (RED AND GREEN) SIGNAL, WALL MOUNTED GASKETED FOR WET LOCATION WITH SUN SHIELD. (GREEN = "OPEN", RED = "CLOSED" LAMPS: 50 WATT, R-20	COLE S-251-WS ALKCO
K	WALL PACK, TEMPERED GLASS REFRACTOR, BRONZE HOUSING AND CAST METAL WIRE GUARD. UNIT SHALL BE OF THE SMALL WALL MOUNT TYPE NOT EXCEEDING 13" x 10". LAMPS: 1-100 WATT, METAL HALIDE, MOGUL BASE BALLAST: 120 VOLT, CONSTANT WATTAGE	LUMARK "GLASS PACK" SERIES HOLCOR GE STONCO WIDE-LITE JPL
L	DOWNLIGHT, RECESSED SELF FLANGED, 6" APERTURE CLEAR SPECULAR LOW IRIDESCENT REFLECTOR. LAMPS: 1-100 WATT INCANDESCENT	LITHONIA GOTHAM "A" SERIES HALO CAPRI LIGHTOLIER
M	2'x4' RECESSED FLUORESCENT TROFFER WITH 3" DEEP SPECULAR, ANODIZED PARABOLIC LOUVER. (18 CELL) LAMPS: 3-32 WATT, T-8, 3500 DEGREE K BALLAST: 120 VOLT ELECTRONIC, PROVIDE (2) BALLASTS FOR INBOARD/OUTBOARD SWITCHING	LITHONIA "2PM3" SERIES METALUX MIDWEST COLUMBIA DAYBRITE
N	SIMILAR TO TYPE "E" EXCEPT PROVIDE FIXTURE WITH 0 DEGREE BALLAST.	
P	36" TALL BRASS LIGHT FIXTURE TO BE SELECTED BY ARCHITECT.	
Q	SAME AS "F" TYPE EXCEPT 2 FEET IN LENGTH.	
R	SAME AS "F" TYPE EXCEPT 3 FEET IN LENGTH.	
S	PERIMETER COVE LIGHT, STANDARD STAGGARD STRIP MOUNTED IN ARCHITECTURAL COVE.	LITHONIA "SS" SERIES METALUX MIDWEST COLUMBIA DAYBRITE
T	DARK BRONZE LIGHT BOLLARD, ALUMINUM, 42" HIGH. SEE DETAIL 6/E0.1 LAMPS: 40-70 WATT, METAL HALIDE, CLEAR BALLAST: 120 VOLT	ARCHITECTURAL AREA LIGHT "ALGR8" SERIES LITHONIA COOPER
U	GROUND MOUNTED FLOOD LIGHT, BRONZE COLOR, WITH MOUNTING BRACKET, CONCRETE BASE AND LOUVER. (SIGN LIGHT) SEE DETAIL 5/E0.1 LAMP: 1-250 WATT, METAL HALIDE BALLAST: 120 VOLT	KIM "AFL" SERIES HYDREL GREENLEE GARDCO LSI
⊗	FIXTURE, EXIT, LED, UNIVERSAL MOUNTING, EDGE-LIT TYPE SINGLE OR DOUBLE FACE, WITH BATTERY UNIT (90 MINUTE), DIRECTION OF ARROWS AS SHOWN ON THE DRAWINGS. LAMPS: LED BALLAST: 120 VOLT	LITHONIA "PRECISE" SERIES SURELITE, DUALITE EMERGILITE, CHLORIDE

ELECTRICAL LEGEND

LIGHTING AND POWER

- CONDUIT RUN CONCEALED ABOVE CEILING OR IN WALL. HASH MARKS INDICATE NUMBER OF CONDUCTORS. (3 CONDUCTORS UNLESS SHOWN)
- CONDUIT RUN CONCEALED BELOW FLOOR SLAB, OR UNDERGROUND.
- A-2,4 — HOMERUN TO PANELBOARD, LETTER OR LETTERS INDICATE PANELBOARD. NUMBERS INDICATES CIRCUIT NUMBERS.
- E — LIGHTING FIXTURE, "E" INDICATES THE FIXTURE TYPE.
- FLUORESCENT FIXTURE, SURFACE OR STEM MOUNTED. HASH MARK IN FIXTURE DENOTES EMERGENCY FIXTURE.
- FLUORESCENT FIXTURE, RECESSED GRID TYPE. (J) REPRESENTS JUNCTION BOX WITH FLEXIBLE METAL CONDUIT. HASH MARK IN FIXTURE DENOTES EMERGENCY FIXTURE.
- LIGHTING FIXTURE, WALL BRACKET MOUNTED. (MOUNTING HEIGHT AS NOTED ON DRAWINGS.)
- EGRESS LIGHT, DUAL HEAD EMERGENCY UNIT.
- EXIT LIGHT, ARROWS, WHERE SHOWN, INDICATE DIRECTION OF EGRESS.
- JUNCTION BOX, FLUSH WALL MOUNTED.
- JUNCTION BOX LOCATED ABOVE CEILING.
- DUPLEX CONVENIENCE OUTLET, +18" TO CENTERLINE OF OUTLET UNLESS OTHERWISE NOTED.
- DUPLEX CONVENIENCE OUTLET MOUNTED ABOVE ACCESSIBLE COUNTER AT +46" TO CENTERLINE.
- QUADRUPLEX CONVENIENCE OUTLET, +18" TO CENTERLINE UNLESS OTHERWISE NOTED.
- QUADRUPLEX OUTLET, ISOLATED GROUND TYPE, +18" TO CENTERLINE
- DUPLEX CONVENIENCE OUTLET, GFI TYPE, +18" TO CENTERLINE UNLESS OTHERWISE NOTED. "WP" WHERE SHOWN INDICATES WEATHERPROOF.
- DUPLEX CONVENIENCE OUTLET, GFI TYPE, MOUNTED ABOVE COUNTER. MOUNT AT 46" TO CENTERLINE ABOVE FINISHED FLOOR.
- DUPLEX RECEPTACLES IN RECESSED FLOOR BOX. CAST METAL BOX WITH BRASS LID. SCREW-IN OUTLET COVERS.
- SPECIAL RECEPTACLE TO SUIT EQUIPMENT FURNISHED.
- $ — SINGLE POLE TOGGLE SWITCH, 3'-6" MOUNTING HEIGHT TO CENTERLINE.
- $3 — THREE OR FOUR WAY SWITCH AS INDICATED, +3'-6" MOUNTING HEIGHT TO CENTERLINE.
- $M — MANUAL MOTOR STARTER, +3'-6" MOUNTING HEIGHT TO CENTERLINE.
- D — DIMMER, WATTAGE AS NOTED ON THE DRAWINGS, +3'-6" MOUNTING HEIGHT TO CENTERLINE.
- PANELBOARD, SEE SCHEDULE.
- T — TRANSFORMER, SEE RISER DIAGRAM FOR SIZE AND VOLTAGE.
- DISCONNECT SWITCH, SIZE AS NOTED ON DRAWINGS.
- COMBINATION MOTOR STARTER AND DISCONNECT SWITCH, FURNISHED BY MECHANICAL, INSTALLED AND CONNECTED BY ELECTRICAL.
- M — MOTOR

TELEPHONE AND COMPUTER SYSTEM

- COMBINATION COMPUTER AND TELEPHONE OUTLET, +18" TO CENTERLINE OF OUTLET UNLESS NOTED OTHERWISE.
- COMBINATION COMPUTER AND TELEPHONE OUTLET, +46" TO CENTERLINE OF OUTLET UNLESS NOTED OTHERWISE.
- TELEPHONE OUTLET, FLUSH WALL MOUNTED AT +46" TO CENTERLINE OF OUTLET.
- PLYWOOD BACKBOARD, "TB" INDICATES TELEPHONE BOARD.

FIRE ALARM SYSTEM

- S — FIRE ALARM SIGNAL, HORN AND FLASHING LIGHT, +6'-8" MOUNTING HEIGHT.
- S — FIRE ALARM STROBE LIGHT, +6'-8" MOUNTING HEIGHT.
- F — FIRE ALARM PULL STATION, WALL MOUNTED +3'-6" ABOVE FLOOR.
- SD — FIRE ALARM SMOKE DETECTOR, CEILING MOUNTED.
- CP — FIRE ALARM CONTROL PANEL, SURFACE WALL MOUNTED.
- SD — FIRE ALARM DUCT SMOKE DETECTOR LOCATED IN HVAC DUCT.
- A — FIRE ALARM ANNUCIATOR.

TELEVISION SYSTEM

- TV — TELEVISION OUTLET, +18" TO CENTER LINE, UNLESS OTHERWISE NOTED.

SECURITY SYSTEM

- CAM — CCTV CAMERA, CAMERA SHALL BE WALL MOUNTED AT 7'-0" A.F.F. TO CENTERLINE UNLESS OTHERWISE NOTED.
- JB — JUNCTION BOX AT 6" ABOVE FINISH FLOOR.
- VD — VAULT DOOR AND AUDIO SENSOR JUNCTION BOXES MOUNTED FLUSH WITH THE CEILING.
- AL — ALARM LAMP JUNCTION BOX. MOUNT AT 84" ABOVE FINISH FLOOR.
- TS — TELLER STATION MONEY CLIP JUNCTION BOX IN UNDER COUNTER CHASE.
- MJB — 12" x 16" MAIN JUNCTION BOX ABOVE VAULT.
- A — ACTIVATOR JUNCTION BOX FLOOR MOUNTED.
- IR — INFRARED MOTION DETECTOR JUNCTION BOX AT 7'-0" ABOVE FINISH FLOOR.
- PD — ALARM PIN PAD CONTROL JUNCTION BOX AT 60" ABOVE FINISH FLOOR.
- DC — DOOR CONTACT JUNCTION BOX.
- CC — CCTV CONTROL JUNCTION BOX.
- CS — CASH SAFE JUNCTION BOX AT 30" ABOVE FINISH FLOOR.
- DP — DYE PACK UNIT.

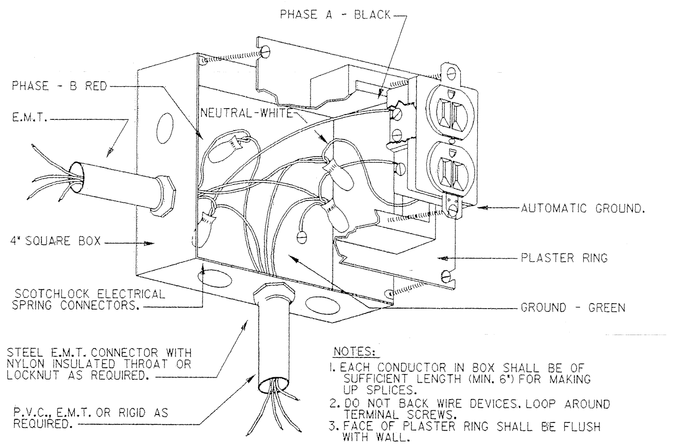

NOTES:
1. EACH CONDUCTOR IN BOX SHALL BE OF SUFFICIENT LENGTH (MIN. 6") FOR MAKING UP SPLICES.
2. DO NOT BACK WIRE DEVICES. LOOP AROUND TERMINAL SCREWS.
3. FACE OF PLASTER RING SHALL BE FLUSH WITH WALL.

1 / E0.1 RECEPTACLE CONNECTION DETAIL
NOT TO SCALE

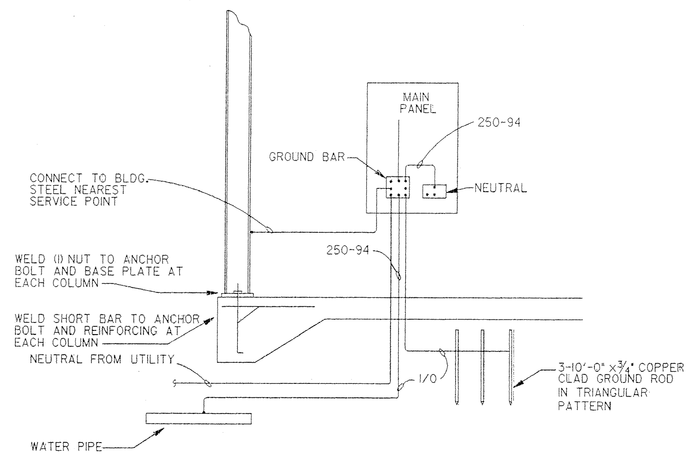

2 / E0.1 BUILDING GROUNDING DETAIL
NOT TO SCALE

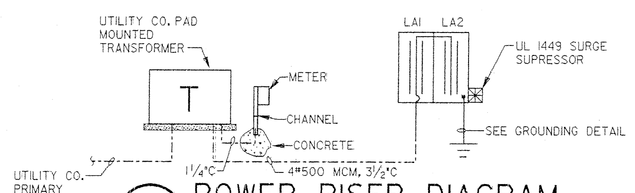

4 / E0.1 POWER RISER DIAGRAM
NOT TO SCALE

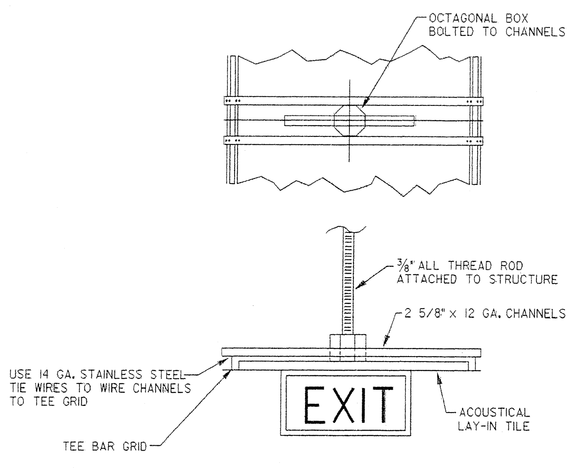

3 / E0.1 EXIT LIGHT MOUNTING DETAIL
NOT TO SCALE

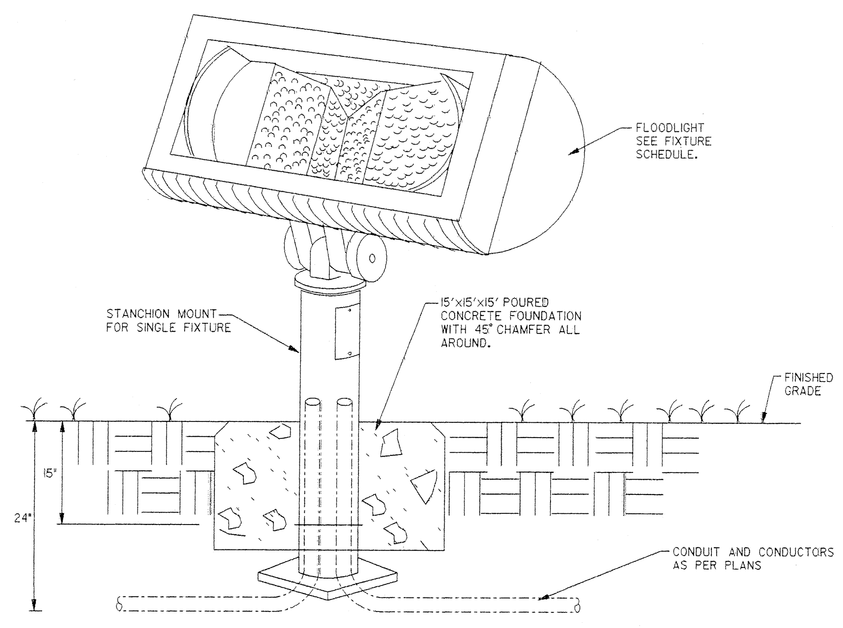

5 / E0.1 STANCHION MOUNT FLOODLIGHT - DETAIL
NOT TO SCALE

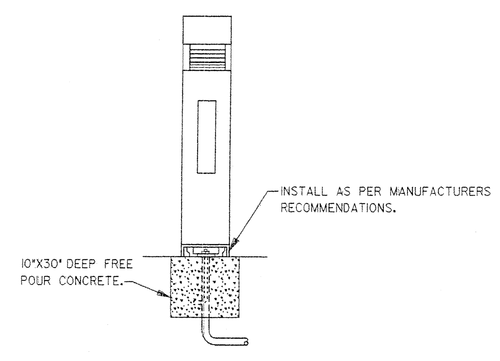

6 / E0.1 BOLLARD FIXTURE MOUNTING DETAIL
NOT TO SCALE

Stantec Architecture Inc.
4875 Riverside Drive
Macon, Georgia U.S.A.
31210-1117
Tel. 478.474.6100
Fax. 478.476.8373
www.stantec.com

Stantec

Copyright Reserved
The Contractor shall verify and be responsible for all dimensions. DO NOT scale the drawing - any errors or omissions shall be reported to Stantec Architecture Inc. without delay.
The Copyrights to all designs and drawings are the property of Stantec Architecture Inc. Reproduction or use for any purpose other than that authorized by Stantec Architecture Inc. is forbidden.

Consultants

Legend

Notes

Revision	By	Appd.	Date

Issued	By	Appd.	Date
	DBR		04/10/01

File Name:	Dwn.	Chkd.	Dsgn.	Date

Permit-Seal

GEORGIA REGISTERED PROFESSIONAL ENGINEER JEFFREY H. WAGGLE

Client/Project
MULTI-MODAL TRANSPORTATION ADMINISTRATION BUILDING
DOUGLAS COUNTY, GEORGIA
DOUGLASVILLE, GEORGIA U.S.A.

Title
ELECTRICAL LEGENDS, SCHEDULES AND DETAILS

Project No.	Scale	
DC0001.000		
Drawing No.	Sheet	Revision
E0.1	1 of 4	0

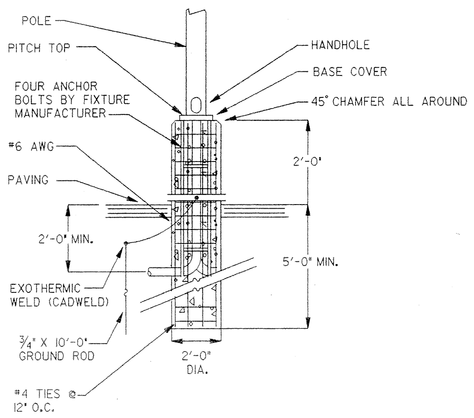

2 / E1.1 POLE BASE DETAIL

NOT TO SCALE

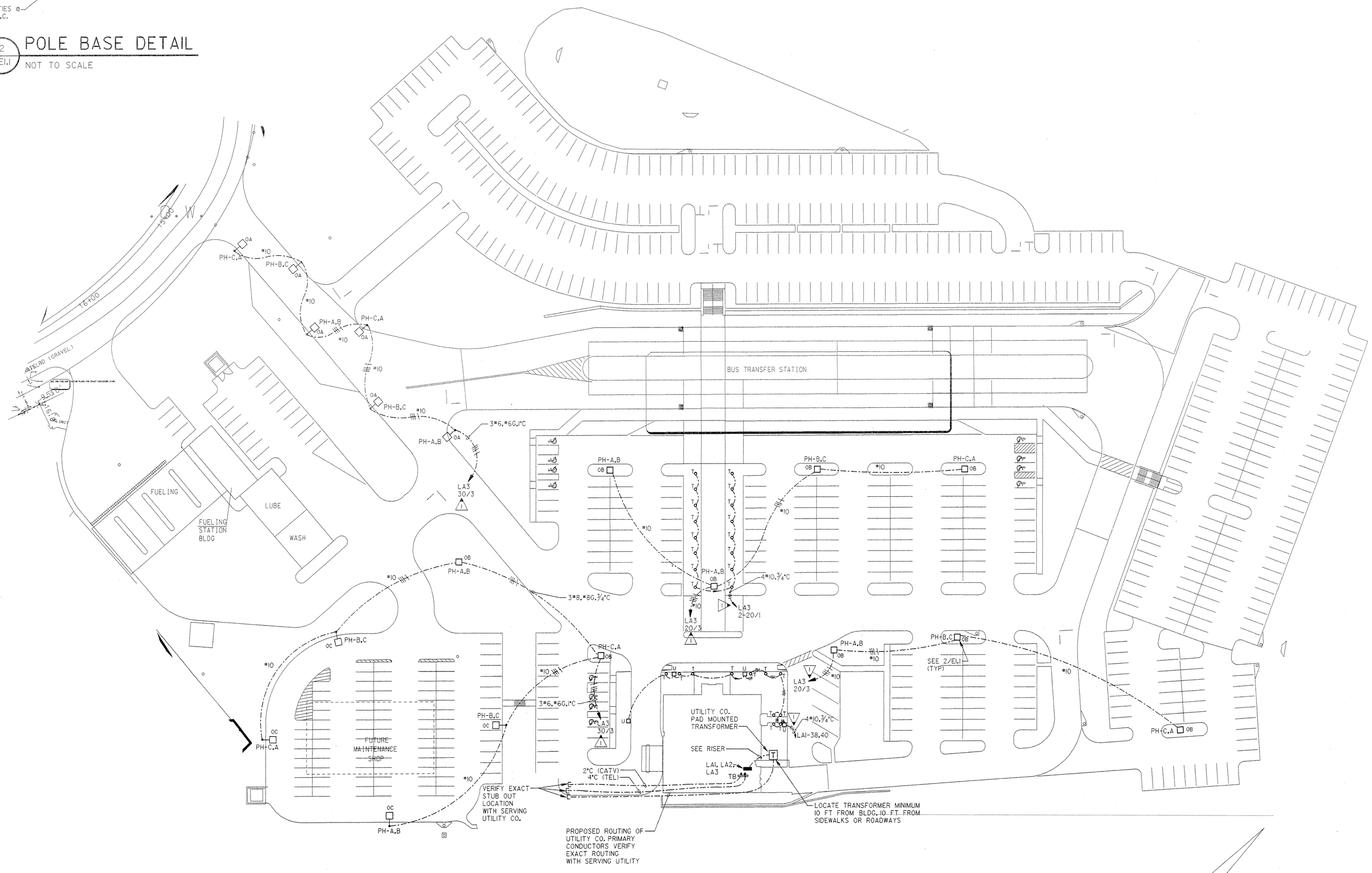

1 / E1.1 SITE PLAN - ELECTRICAL

SCALE: 1" = 40'-0"

ADDENDUM No. 3 03/22/01

Stantec Architecture Inc.
4875 Riverside Drive
Macon, Georgia U.S.A.
31210-1117
Tel. 478.474.8100
Fax. 478.474.8373
www.stantec.com

Stantec

Copyright Reserved

The Contractor shall verify and be responsible for all dimensions. DO NOT scale the drawing - any errors or omissions shall be reported to Stantec Architecture Inc. without delay.
The Copyrights to all designs and drawings are the property of Stantec Architecture Inc. Reproduction or use for any purpose other than that authorized by Stantec Architecture Inc. is forbidden.

Consultants

ELECTRICAL DESIGN
EDC CONSULTANTS, INC.
7411 AIRPORT DRIVE
MACON, GA 31216

Legend

Notes

KEYED NOTES: (THIS SHEET ONLY)

1. ROUTE VIA PHOTO CELL/CONTACTOR FOR EXTERIOR LIGHTING. SEE LIGHTING FLOOR PLAN E2.1. PROVIDE ADDITIONAL CONTACTORS AS REQUIRED.

GENERAL NOTES: (THIS SHEET ONLY)

A. COORDINATE LOCATIONS OF ALL EXISTING SITE UTILITIES PRIOR TO ROUGHING. STAKE-OFF ALL EXISTING UTILITES.

B. COORDINATE ROUGH-IN FOR POWER, TELEPHONE, AND CABLE TV SERVICE WITH SERVING UTILITY COMPANIES PRIOR TO PERFORMING WORK.

Revision	By	Appd.	Date

Issued	By	Appd.	Date

File Name:	Dwn.	Chkd.	Dsgn.	Date

Permit-Seal

GEORGIA REGISTERED PROFESSIONAL ENGINEER No. 17000 JEFFREY H. WEBB

Client/Project

MULTI-MODAL TRANSPORTATION ADMINISTRATION BUILDING

DOUGLAS COUNTY, GEORGIA

DOUGLASVILLE, GEORGIA U.S.A.

Title

SITE PLAN

Project No.	Scale	
DC0001.000		
Drawing No.	Sheet	Revision
E1.1	of	

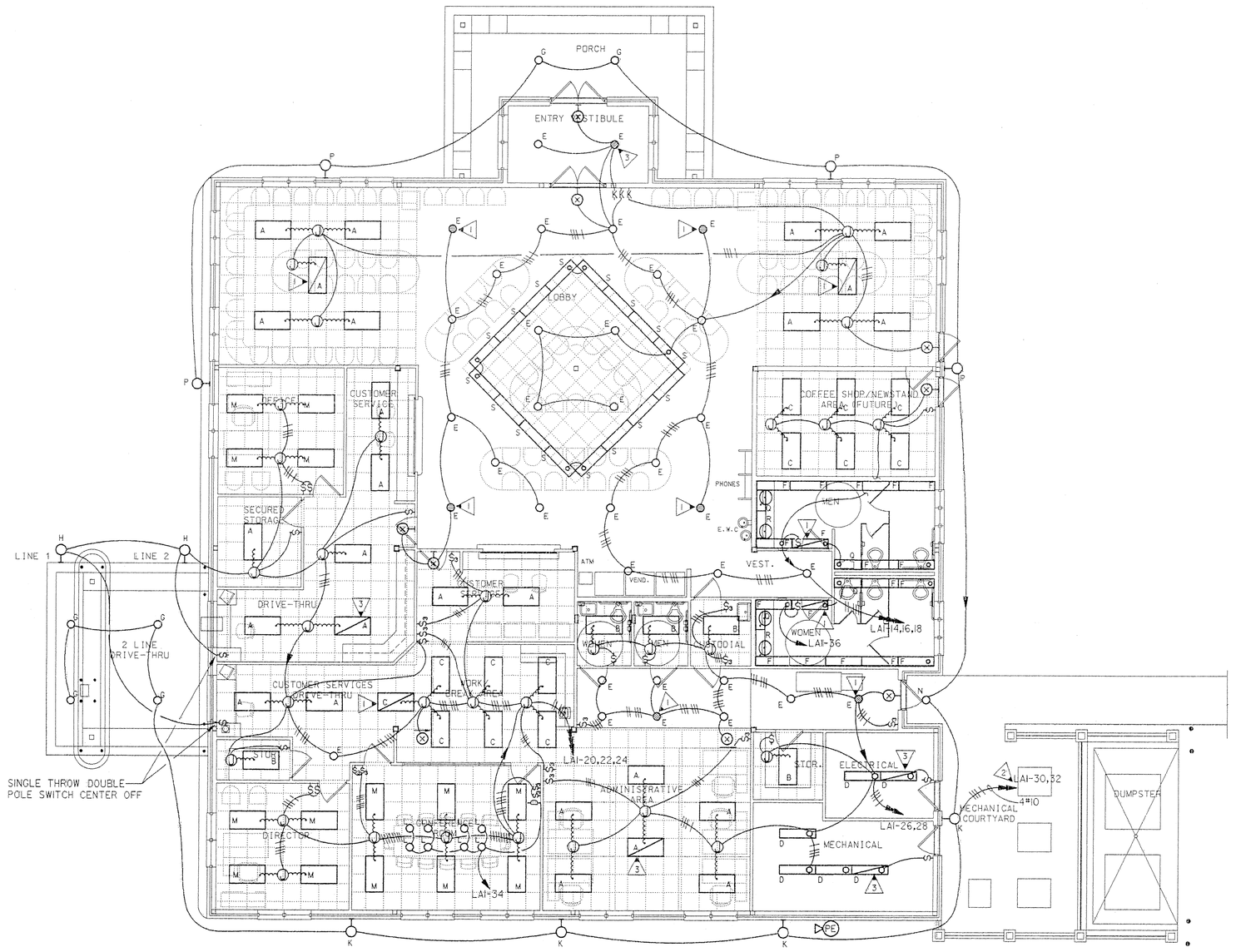

1 E2.1 FLOOR PLAN - LIGHTING

SCALE: 1/8"=1'-0"

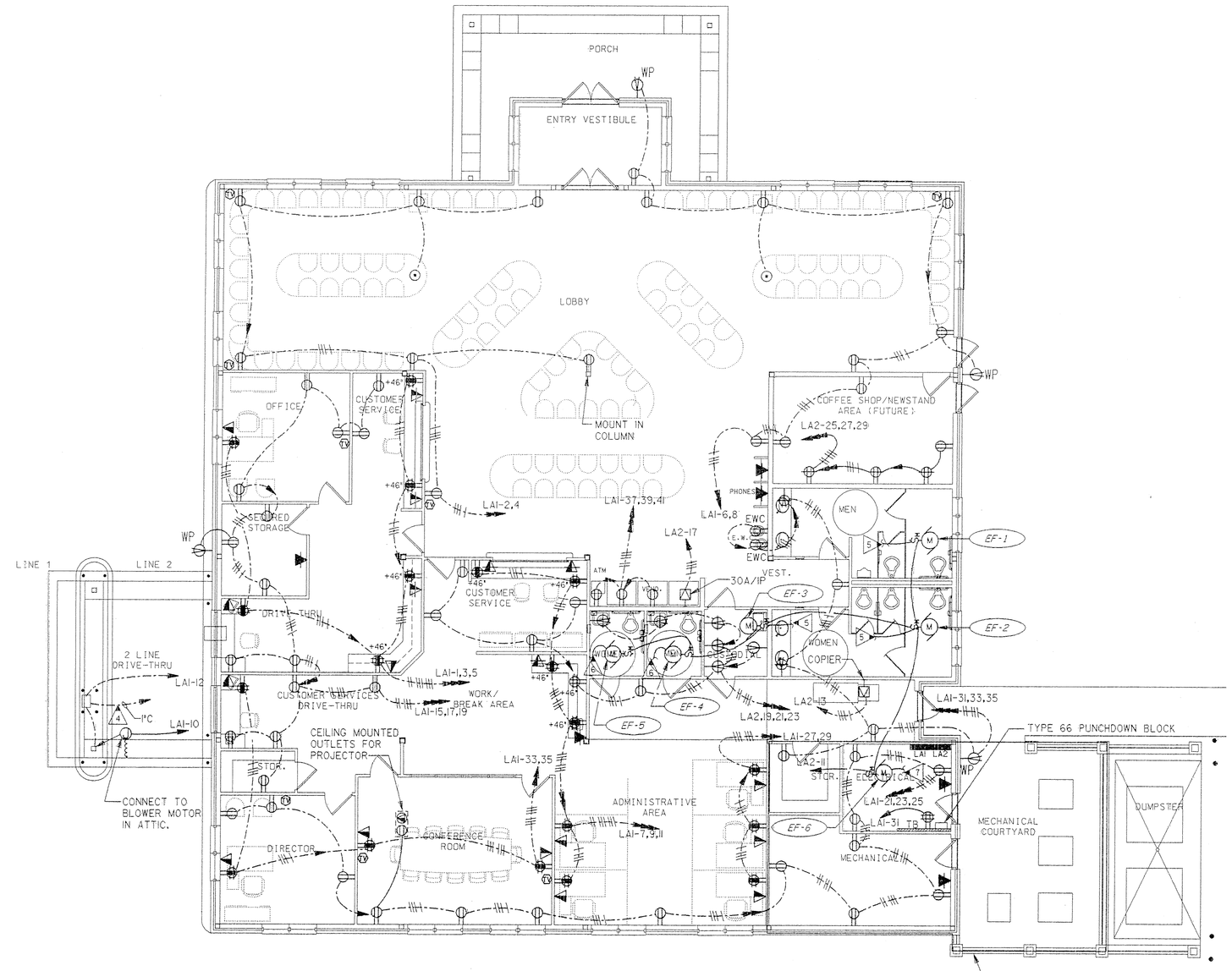

2 E2.1 FLOOR PLAN - POWER

SCALE: 1/8"=1'-0"

3 E2.1 FOR MECHANICAL EQUIPMENT

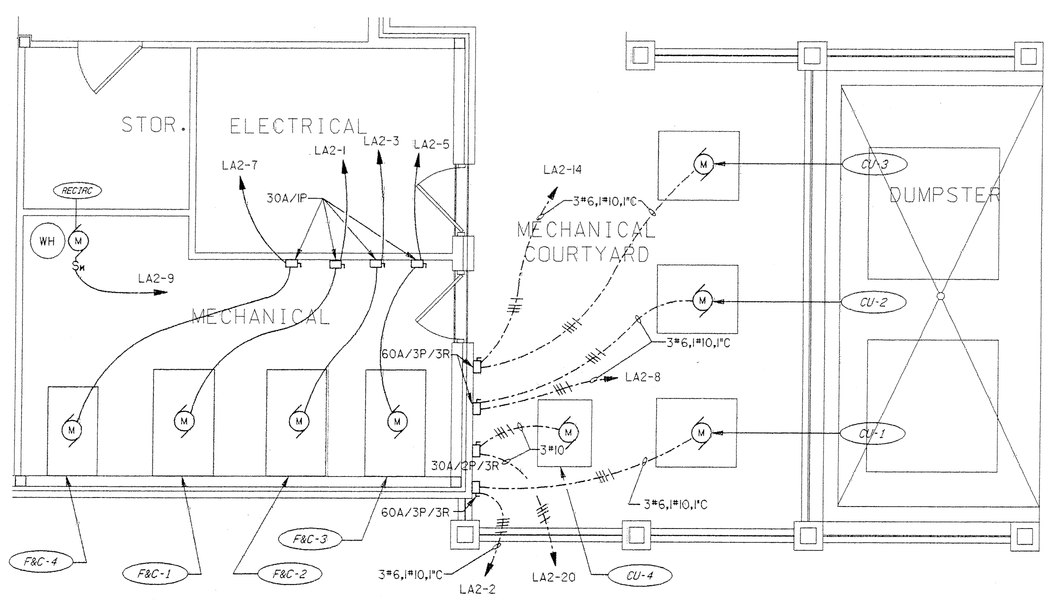

3 E2.1 LARGE SCALE MECHANICAL ROOM

SCALE: 1/4"=1'-0"

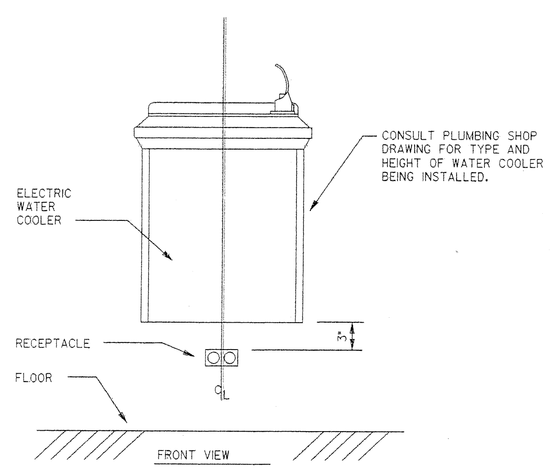

4 E2.1 RECEPTACLE LOCATION @ ELECTRIC WATER COOLER

NOT TO SCALE

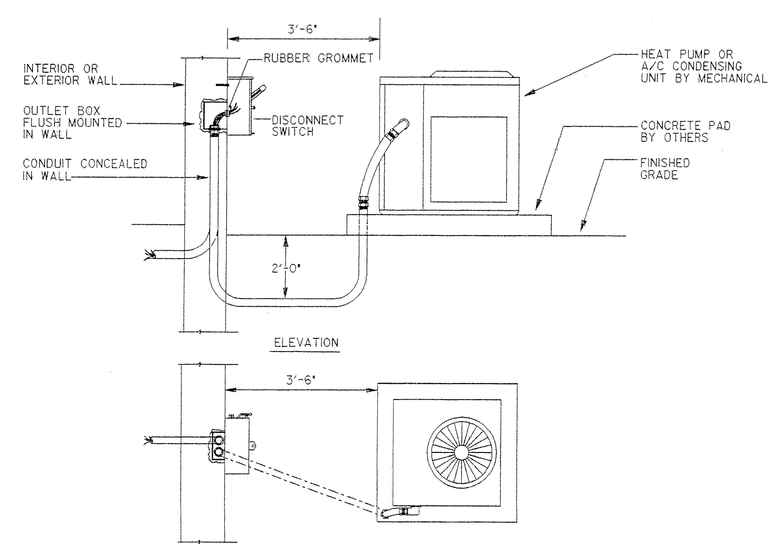

5 E2.1 DISCONNECT SWITCH - MOUNTING DETAIL

NOT TO SCALE

Stantec Architecture Inc.
4875 Riverside Drive
Macon, Georgia U.S.A.
31210-1117
Tel. 478.474.6100
Fax. 478.476.8373
www.stantec.com

Stantec

Copyright Reserved

The Contractor shall verify and be responsible for all dimensions. DO NOT scale the drawing — any errors or omissions shall be reported to Stantec Architecture Inc. without delay.
The Copyrights to all designs and drawings are the property of Stantec Architecture Inc. Reproduction or use for any purpose other than that authorized by Stantec Architecture Inc. is forbidden.

Consultants

Legend

Notes

KEYED NOTES: (THIS SHEET ONLY)

1. NIGHT LIGHT FIXTURE WITH INTEGRAL BATTERY BACKUP BALLAST(800 LUMEN, 90 MINUTE). CHARGE LIGHT AND TEST SWITCH TO BE FACTORY INSTALLED IN FIXTURE. NOT REMOTELY MOUNTED.
2. PROVIDE PHOTO-ELECTRIC CELL TO CONTROL EXTERIOR LIGHTING ADJUSTED FOR DUSK-TIL-DAWN OPERATION. LOCATE P.E. CELL FACING NORTH CLEAR OF MAN MADE LIGHT SOURCES. J-BOX TO HOUSE P.E. CELL SHALL BE RECESSED MOUNTED IN BRICK COURSING WITH STAINLESS STEEL COVER. PROVIDE A CONTACTOR ADJACENT SERVING PANEL WITH 20 AMP CONTACTS AS REQUIRED FOR NUMBER OF EXTERIOR CIRCUITS.
3. PROVIDE FIXTURE WITH INTEGRAL BATTERY BACKUP (800 LUMEN, 90 MINUTE). CHARGE LIGHT AND TEST SWITCH TO BE FACTORY INSTALLED IN FIXTURE, NOT REMOTELY MOUNTED. FIXTURE TO BE SWITCHED WITH OTHER LIGHTS BUT SHALL ENERGIZE UPON LOSS OF NORMAL POWER REGARDLESS OF SWITCH POSITION. EXTRA PHASE CONDUTOR PROVIDED FOR BATTERY CHARGING AND SENSING LOSS OF NORMAL POWER.
4. STUB CONDUIT UP UNDER CONTROL CABINET. VERIFY LOCATION WITH ARCHITECT PRIOR TO ROUGHING.
5. TO TIME CLOCK FOR CONTROLS. SEE MECHANICAL FOR LOCATION.
6. SWITCH FAN WITH LIGHTS IN THE SAME SPACE. PROVIDE TIME DELAY (5 MIN.) RELAY.
7. TO THERMOSTAT FOR CONTROL. SEE MECHANICAL FOR LOCATION.

Revision	By	Appd.	Date

Issued	By	Appd.	Date

File Name:	Dwn.	Chkd.	Dsgn.	Date
	DTR			04/10/01

Permit-Seal

GEORGIA REGISTERED PROFESSIONAL ENGINEER JEFFREY H. McGEE

Client/Project

MULTI-MODAL TRANSPORTATION ADMINISTRATION BUILDING

DOUGLAS COUNTY, GEORGIA

DOUGLASVILLE, GEORGIA U.S.A.

Title

FLOOR PLAN – LIGHTING
FLOOR PLAN – POWER & SYSTEMS

Project No.	Scale	
DC0001.000		
Drawing No.	**Sheet**	**Revision**
E2.1	3 of 4	0

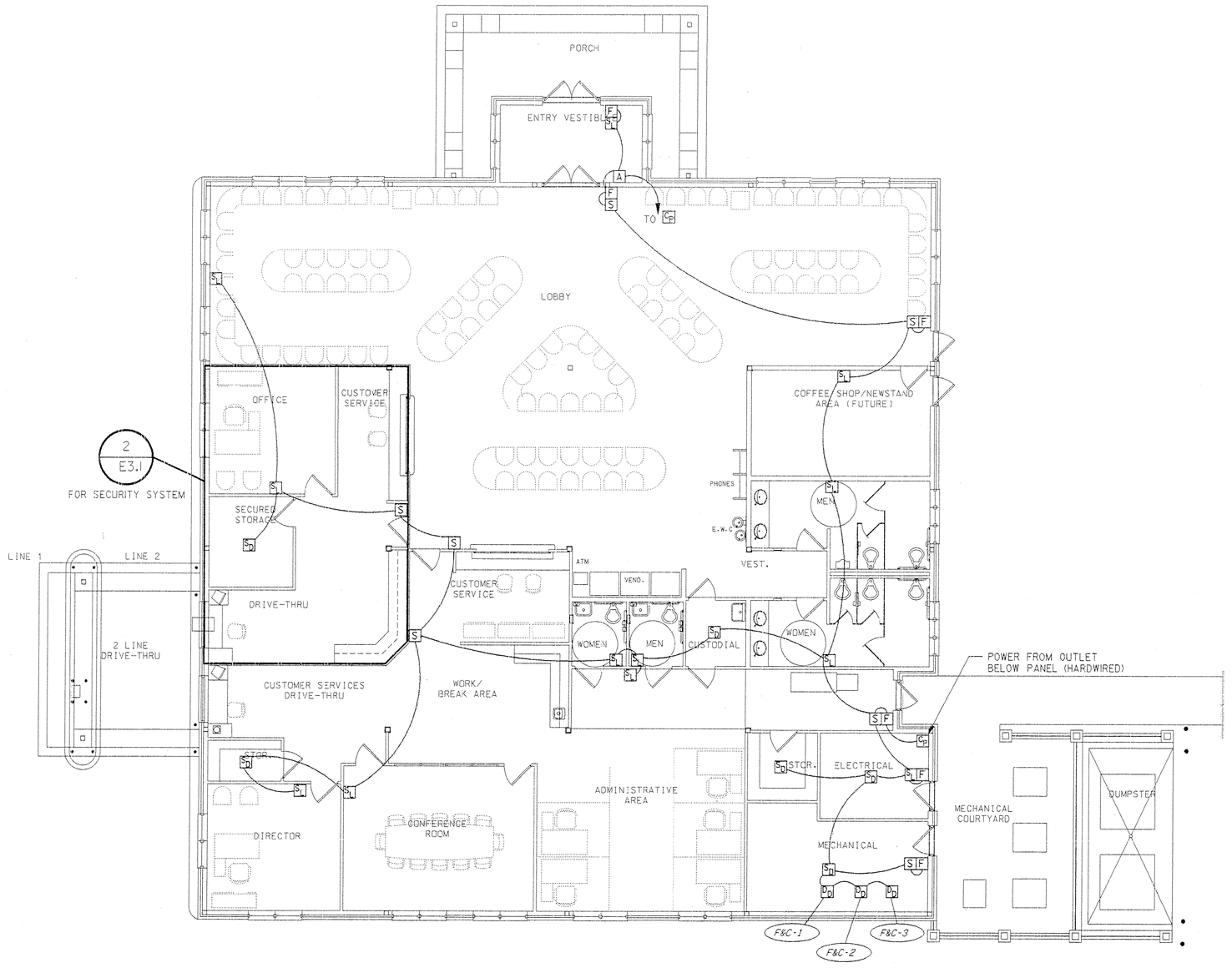

1 E3.1 FLOOR PLAN - FIRE ALARM SYSTEM

SCALE: 1/8"=1'-0"

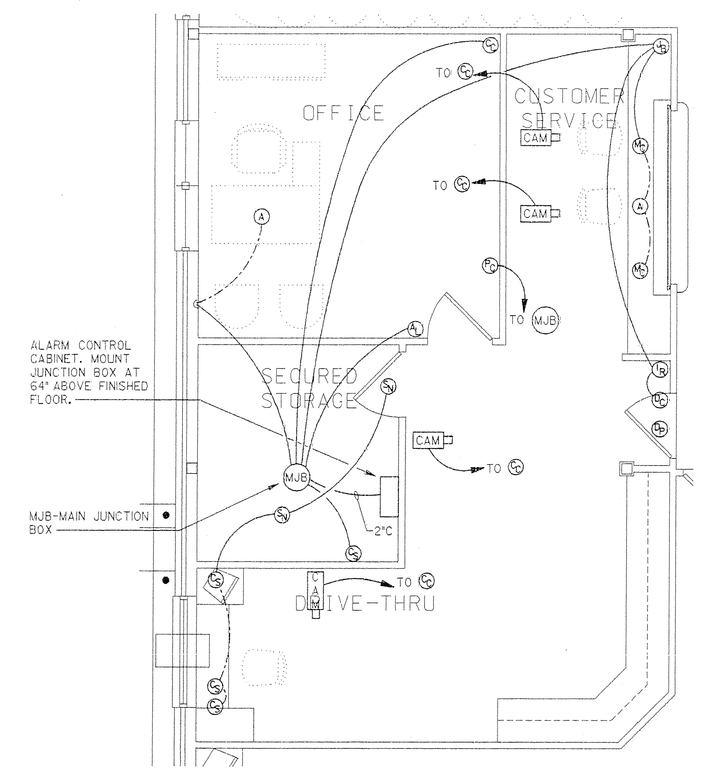

2 E3.1 PARTIAL FLOOR PLAN - SECURITY SYSTEM

SCALE: 1/4"=1'-0"

Stantec Architecture Inc.
4875 Riverside Drive
Macon, Georgia U.S.A.
31210-1117
Tel. 478.474.6100
Fax. 478.476.8373
www.stantec.com

Stantec

Copyright Reserved

The Contractor shall verify and be responsible for all dimensions. DO NOT scale the drawing - any errors or omissions shall be reported to Stantec Architecture Inc. without delay.
The Copyrights to all designs and drawings are the property of Stantec Architecture Inc. Reproduction or use for any purpose other than that authorized by Stantec Architecture Inc. is forbidden.

Consultants

Legend

Notes

GENERAL NOTES: (THIS SHEET ONLY)

A. EXACT LOCATION OF ALL JUNCTION BOXES TO BE COORDINATED WITH ARCHITECT.

B. ALL CONDUIT FOR SECURITY SYSTEM SHALL BE 3/4" UNLESS OTHERWISE NOTED.

C. CONTRACTOR IS TO PROVIDE JUNCTION BOXES AND CONDUIT SYSTEM ONLY. VIDEO AND ALARM SYSTEM WIRING SHALL BE FURNISHED AND INSTALLED BY OWNER.

Revision	By	Appd.	Date

Issued	By	Appd.	Date
File Name:	Dwn.	Chkd.	Dsgn.	Date

Permit-Seal

GEORGIA REGISTERED PROFESSIONAL ENGINEER JEFFREY H. McGEE

Client/Project

MULTI-MODAL TRANSPORTATION ADMINISTRATION BUILDING

DOUGLAS COUNTY, GEORGIA

DOUGLASVILLE, GEORGIA U.S.A.

Title

FLOOR PLAN - FIRE ALARM
FLOOR PLAN - SECURITY SYSTEM

Project No.	Scale	
DC0001.000		
Drawing No.	Sheet	Revision
E3.1	4 of 4	0

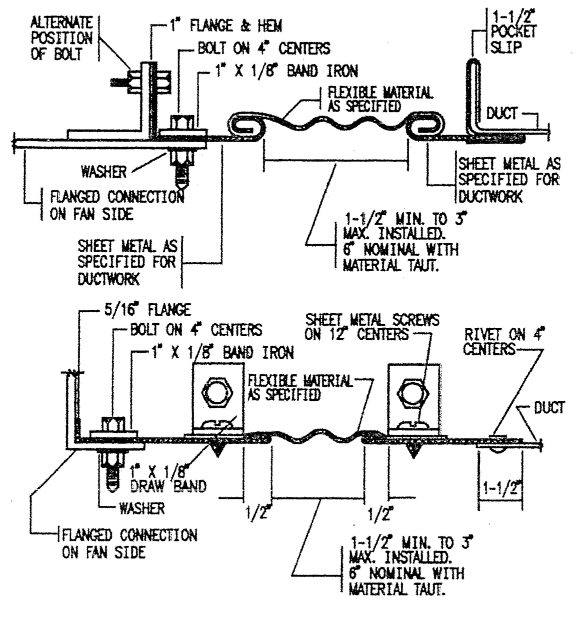

1 / M1.1 TYPICAL FLEX CONNECTION DETAIL
NO SCALE

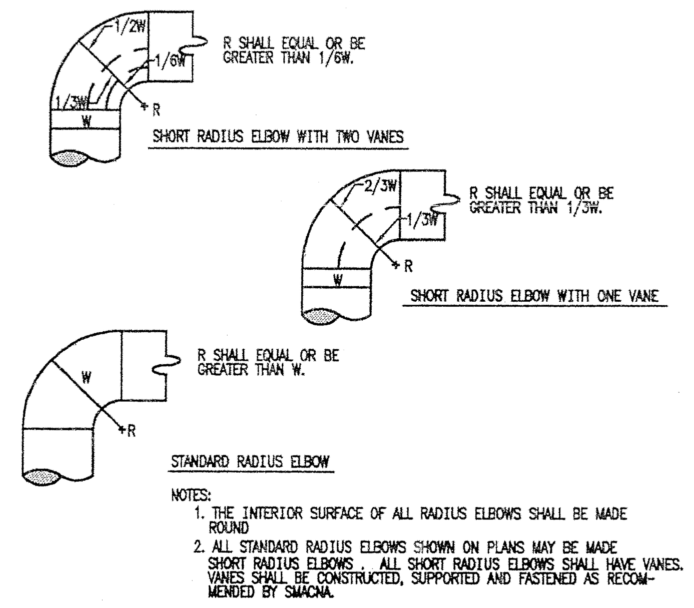

2 / M1.1 RADIUS ELBOW DUCT DETAILS
NO SCALE

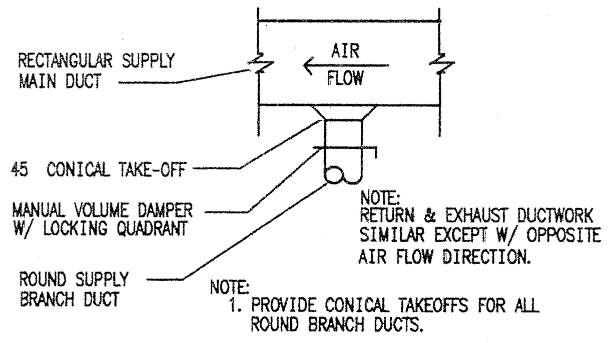

3 / M1.1 ROUND DUCT TAKEOFF DETAIL
NO SCALE

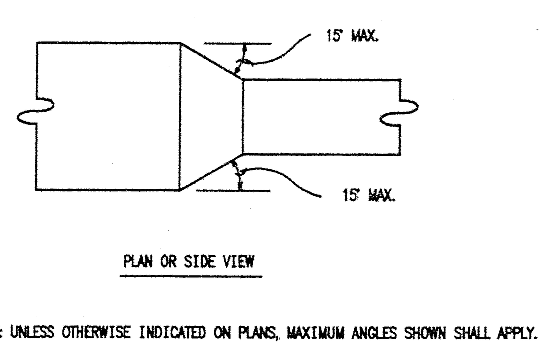

4 / M1.1 DUCT TRANSITION DETAIL
NO SCALE

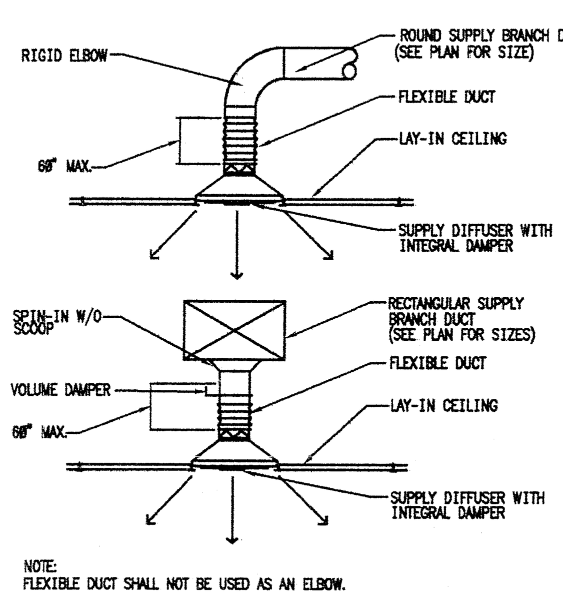

5 / M1.1 TYPICAL DIFFUSER INSTALLATION DETAILS
NO SCALE

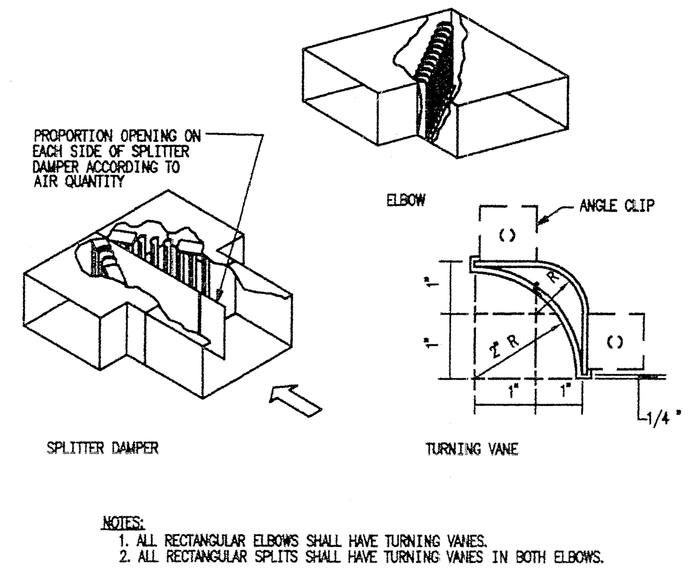

6 / M1.1 DUCT CONSTRUCTION DETAILS
NO SCALE

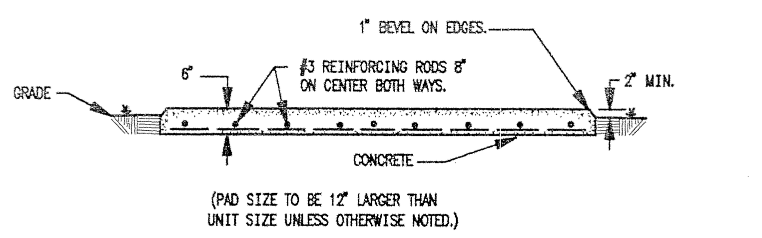

7 / M1.1 CONCRETE PAD DETAIL
NO SCALE

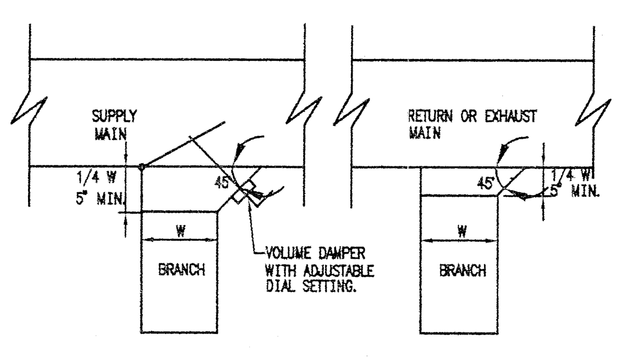

8 / M1.1 DUCT BRANCH TAKE-OFF FOR LOW PRESSURE DETAIL
NO SCALE

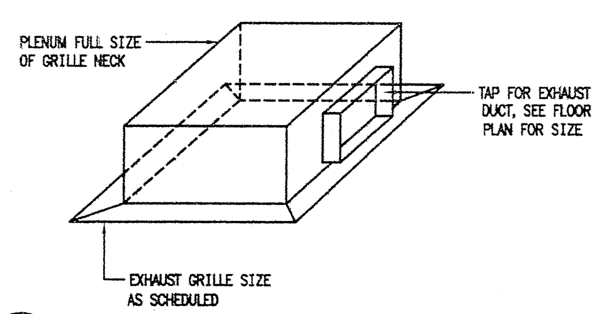

9 / M1.1 TOILET EXHAUST INTAKE
NO SCALE

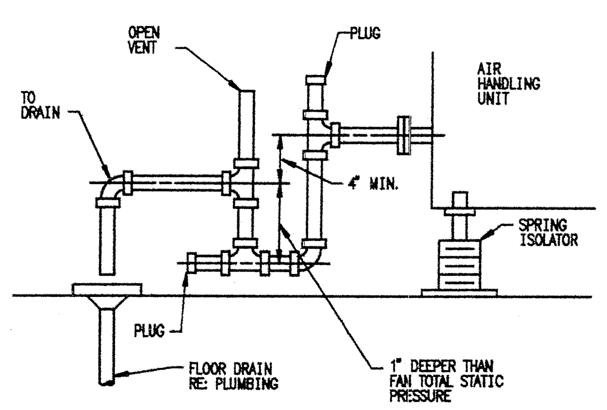

10 / M1.1 CONDENSATE DRAIN DETAIL
NO SCALE

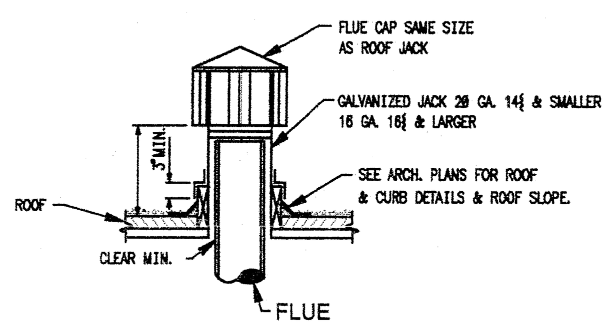

11 / M1.1 FLUE THRU ROOF DETAIL
NO SCALE

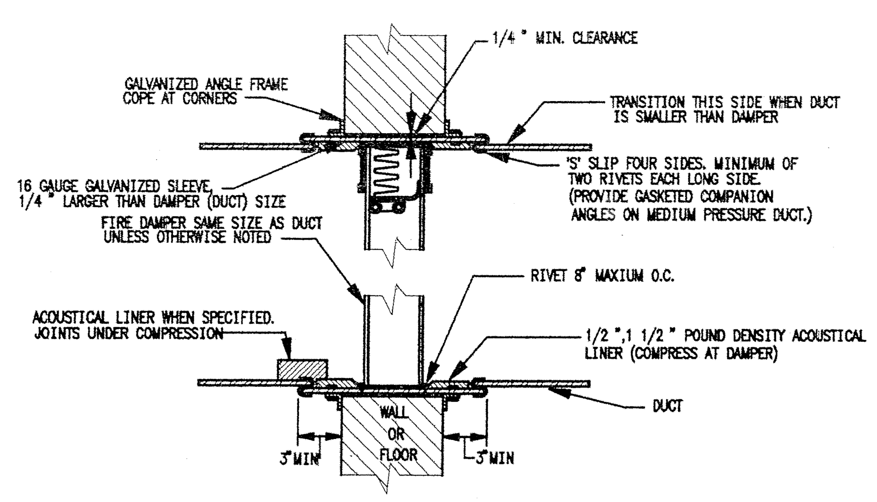

11 / M1.1 CONDENSATE DRAIN DETAIL
NO SCALE

HVAC LEGEND

NOTE: ALL SYMBOLS MAY NOT APPEAR ON DRAWINGS

SINGLE LINE	DESCRIPTION	DOUBLE LINE
	ROUND OR OVAL DUCT	
	90° ELBOW DOWN	
	90° ELBOW UP	
	ROUND RADIUS ELBOW	
	45° ELBOW	
	90° CONICAL TEE	
	45° BRANCH	
	SIZE TRANSITION	
	ROUND FLEXIBLE DUCT	
	RECTANGULAR DUCT	
	90° ELBOW DOWN	
	90° ELBOW UP	
	RECTANGULAR RADIUS ELBOW	
	RECTANGULAR ELBOW WITH TURNING VANES	
	SPLIT BRANCH TAKE-OFF WITH SQUARE ELBOW AND SPITTER DAMPER.	
	BRANCH TAKE-OFF WITH RADIUS HEEL AND DAMPER.	
	TEE WITH SPLITTER	
	ACCESSORIES	
	SQUARE NECK CLG. DIFFUSER 4-WAY DIRECTIONAL THROW UNLESS INDICATED OTHERWISE.	
	SQUARE NECK CLG. DIFFUSER 4-WAY DIRECTIONAL THROW UNLESS INDICATED OTHERWISE.	
	SUPPLY DUCT RISER	
	RETURN, EXHAUST OR OUTSIDE AIR DUCT RISER.	
	CEILING RETURN AIR GRILLE OR REGISTER	
	MANUAL VOLUME DAMPER	
	DAMPER - F (FIRE), M (MOTORIZED)	
AH 1	EQUIP OR GRILLE DESIGNATION / EQUIP MARK OR GRILLE CFM	A 350
T AH-1	THERMOSTAT W/ UNIT CONTROLLED	T AH-1
S	SMOKE DAMPER	S
	CONNECT TO EXISTING	

FURNACE AND COIL SCHEDULE

MARK	CFM	FUEL	ELECT. VOLTS	ELECT. PH	ELECT. MCA	MFGR	FURNACE MODEL	COIL MODEL	O.A. CFM	SERVES	HEATING CAPACITY BTUH IN	HEATING CAPACITY BTUH OUT	ESP	REMARKS
F&C-1	4000	GAS	208	3	12.7	REZNOR	CAUA-250	ACUB-120	515	ADMINISTRATION	250,000	200,000	0.587	
F&C-2	3000	GAS	208	3	6.6	REZNOR	CAUA-200	ACUA-090	830	LOBBY, RESTROOMS	200,000	160,000	0.426	
F&C-3	3000	GAS	208	3	6.6	REZNOR	CAUA-200	ACUA-090	830	LOBBY, RESTROOMS	200,000	160,000	0.490	
F&C-4	1200	GAS	115	1	8.3	CARRIER	58PAV-045-160-12	CK5AXA030	75	CREDIT UNION	44,000	35,000	0.372	

CONDENSING UNIT SCHEDULE

MARK	SERVES	CAPACITY BTUH	TEMP, DF SUCTION	TEMP, DF AMBIENT	VOLTS	PHASE	MCA	MOCP	MFGR.	MODEL	MIN SEER	NOM TONS	REMARKS
CU-1	F&C-1	107.0	40	95	208	3	53.4	60	CARRIER	38AKS012	10.2	10.0	
CU-2	F&C-2	97.0	45	95	208	3	43.2	50	CARRIER	38KS008	11.5	7.5	
CU-3	F&C-3	97.0	45	95	208	3	43.2	50	CARRIER	38AKS008	11.5	7.5	
CU-4	F&C-4	30.2	45	95	208	1	19.6	30	CARRIER	38BRC030	11.25	2.5	

(VOLTS, PHASE, MCA and MOCP are under the ELECTRICAL DATA heading.)

EXHAUST FAN SCHEDULE

MARK	SERVES	TYPE	CFM	S.P." WG	FAN RPM	WATTS/hp	VOLTS	PH	MFGR.	MODEL	REMARKS
EF-1	MEN'S RESTROOM 105	CEILING	345	0.380	1350	135	115	1	GREENHECK	SP-228	SEE NOTE 1
EF-2	WOMEN'S RESTROOM 110	CEILING	345	0.380	1350	135	115	1	GREENHECK	SP-228	SEE NOTE 1
EF-3	CUSTODIAL SERVICES 109	CEILING	113	0.200	1100	53	115	1	GREENHECK	SP-216	SEE NOTE 1
EF-4	MEN'S TOILET 108	CEILING	100	0.180	950	49	115	1	GREENHECK	SP-210	SEE NOTE 2
EF-5	WOMEN'S TOILET 107	CEILING	100	0.180	950	49	115	1	GREENHECK	SP-210	SEE NOTE 2
EF-6	ELECTRICAL ROOM 113	CEILING	229	0.240	1000	83	115	1	GREENHECK	SP-224	SEE NOTE 3
EF-7	ATTIC	ROOF	3780	0.125	733	1/2 hp	115	1	GREENHECK	GB-200-5	SEE NOTE 4
EF-8	ATTIC	ROOF	3780	0.125	733	1/2 hp	115	1	GREENHECK	GB-200-5	SEE NOTE 4

NOTES:
1. OPERATE WITH 24 HR ELECTRONIC TIMER LOCATED IN MECHANICAL ROOM
2. OPERATE WITH LIGHTS
3. OPERATE WITH THERMOSTAT LOCATED IN ELECTRICAL ROOM
4. OPERATE WITH THERMOSTAT LOCATED IN ATTIC

LOUVER SCHEDULE

UNIT NO.	MANUFACTURER	MODEL NO.	NOMINAL SIZE	SPD (IN.)	FREE AREA	FRAME	REMARKS
L-1	GREENHECK	BVE 1616	16"x16"	-	-	BRICK VENT	INTAKE; F&C-1, F&C-4
L-2	GREENHECK	BVE	48"x16"	-	-	BRICK VENT	INTAKE; F&C-2, F&C-3
L-3	GREENHECK	BVE 168	16"x8"	-	-	BRICK VENT	EXHAUST; EF-6
L-4	GREENHECK	BVE	24"x16"	-	-	BRICK VENT	COMBUSTION AIR INTAKE
L-5	GREENHECK	BVE	24"x16"	-	-	BRICK VENT	COMBUSTION AIR EXHAUST
L-6	GREENHECK	BVE 248	24"x8"	-	-	BRICK VENT	EXHAUST; EF-1, EF-2
L-7	GREENHECK	BVE 808	8"x8"	-	-	BRICK VENT	EXHAUST; EF-3
L-8	GREENHECK	BVE 808	8"x8"	-	-	BRICK VENT	EXHAUST; EF-4, EF-5

REGISTER GRILLES & DIFFUSER SCHEDULE

UNIT NO.	MANUFACTURER'S DESIGNATION	NOMINAL SIZE	THROAT SIZE	MAX. CFM	FRAME	REMARKS
A	PRICE SCD	12" x 12"	4"	60	LAY-IN	SUPPLY
B	PRICE SCD	24" x 24"	6"	150	SURFACE	SUPPLY WITH OBD
C	PRICE SCD	24" x 24"	8"	250	LAY-IN	SUPPLY
D	PRICE SCD	24" x 24"	10"	325	LAY-IN	SUPPLY
E	PRICE SCD	24" x 24"	12"	525	LAY-IN	SUPPLY
F	PRICE 80	24" x 24"	SEE DRAWING	-	SURFACE	RETURN, 1 WITH OBD
G	PRICE 80	24" x 24"	SEE DRAWING	-	LAY-IN	RETURN, 1
H	PRICE SCD	24" x 24"	8"	230	SURFACE	SUPPLY WITH OBD
I	PRICE SCD	24" x 24"	10"	300	SURFACE	SUPPLY WITH OBD
J	PRICE SCD	24" x 24"	12"	470	SURFACE	SUPPLY WITH OBD
K	PRICE 510	8" x 6"	8"	200	SIDEWALL	SUPPLY, SINGLE DEFLECTION, 22.5 DEGREES
L	PRICE 535	12" x 8"	9"	-	SIDEWALL	RETURN, 1
M	PRICE 80	24" x 24"	18" x 14"	-	SURFACE	RETURN, 1

NOTES:
1. PAINT BOX FLAT BLACK

Denning ENGINEERING
151 OSIGIAN BLVD
SUITE 155
WARNER ROBINS, GEORGIA 31088
(478) 971-2656

Stantec Architecture Inc.
4875 Riverside Drive
Macon, Georgia U.S.A.
31210-1117
Tel. 478.474.6100
Fax. 478.476.8373
www.stantec.com

Stantec

Copyright Reserved
The Contractor shall verify and be responsible for all dimensions. DO NOT scale the drawing - any errors or omissions shall be reported to Stantec Architecture Inc. without delay.
The Copyrights to all designs and drawings are the property of Stantec Architecture Inc. Reproduction or use for any purpose other than that authorized by Stantec Architecture Inc. is forbidden.

Consultants

Legend

Notes

Revision	By	Appd.	Date

Issued	By	Appd.	Date
			04/10/01

File Name: m04a3-1.dwg	JWK	DJD	BLD	3/20/01
	Dwn.	Chkd.	Dsgn.	Date

Permit-Seal

GEORGIA REGISTERED No. 25583 PROFESSIONAL ENGINEER DAVID J DENNING

Client/Project
MULTI-MODAL TRANSPORTATION ADMINISTRATION BUILDING
DOUGLAS COUNTY, GEORGIA
DOUGLASVILLE, GEORGIA U.S.A.

Title
MECHANICAL DETAILS, LEGEND, AND SCHEDULES

Project No.	Scale	
DCO001.000	NO SCALE	
Drawing No.	Sheet	Revision
M1.1	1 of 2	0

erver\denning eng\2K Projects\2K-69\CHECKS\2K-69M1.1.dwg Mon Mar 19 10:20:30 2001

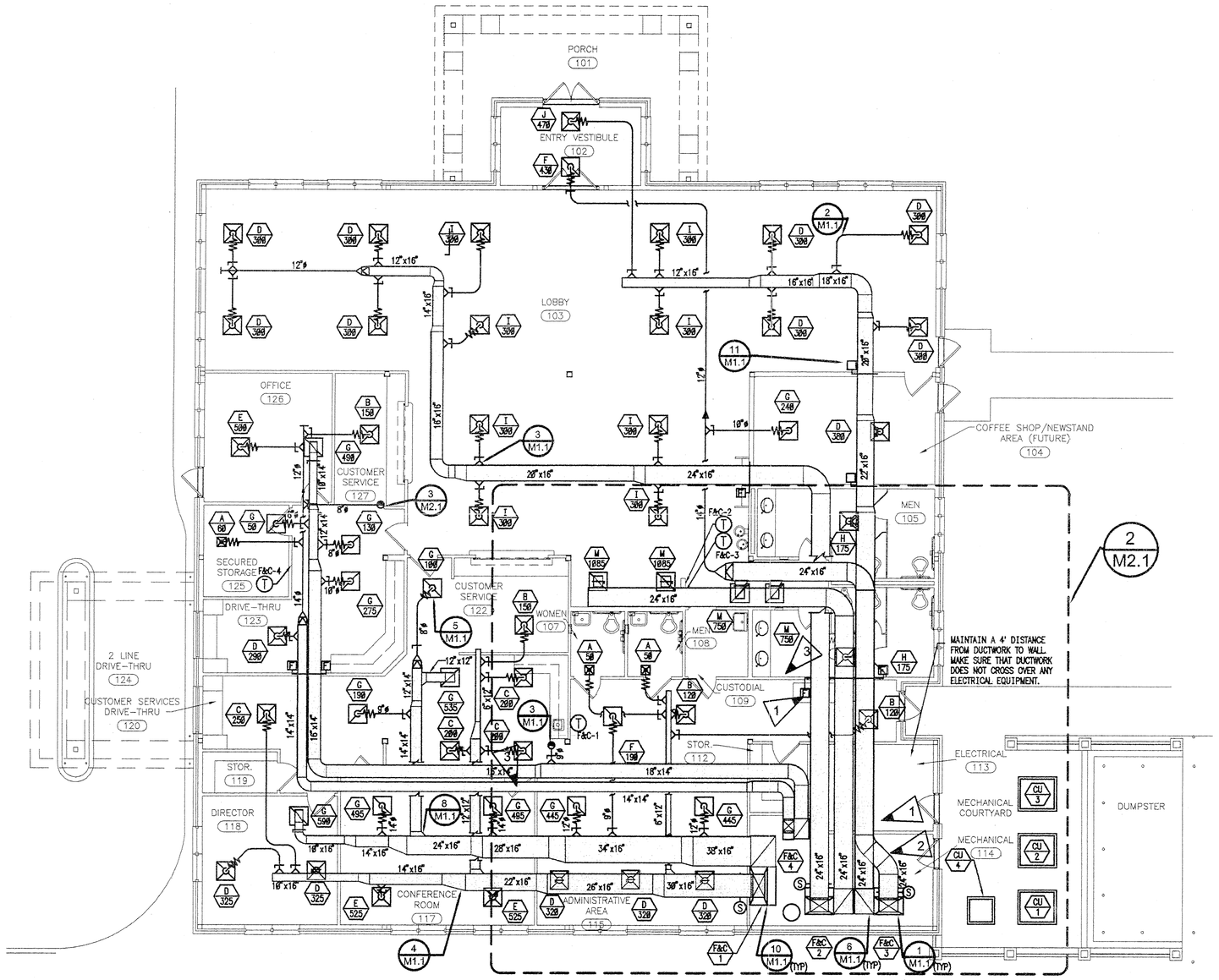

1 M2.1 FLOOR PLAN - MECHANICAL
SCALE: 1/8" = 1'-0"

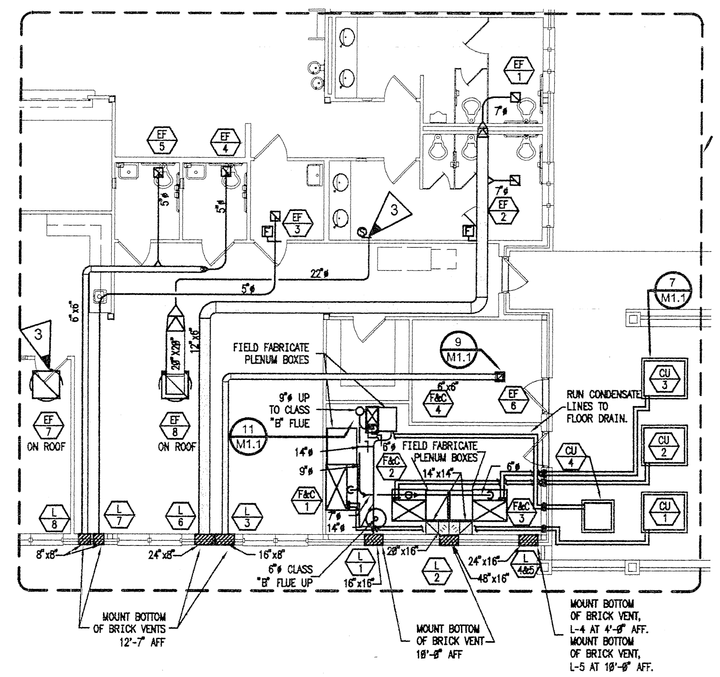

2 M2.1 PARTIAL FLOOR PLAN - EXHAUST
SCALE: 1/8" = 1'-0"

KEYED NOTES: (THIS SHEET ONLY)

1. FIRE DAMPERS REQUIRED IN ALL FOUR DUCT PENENTRATIONS.
2. TRANSITION SUPPLY DUCT TO RUN ABOVE RETURN DUCT.
3. PROVIDE THERMOSTAT FOR EXHAUST FAN IN ATTIC.

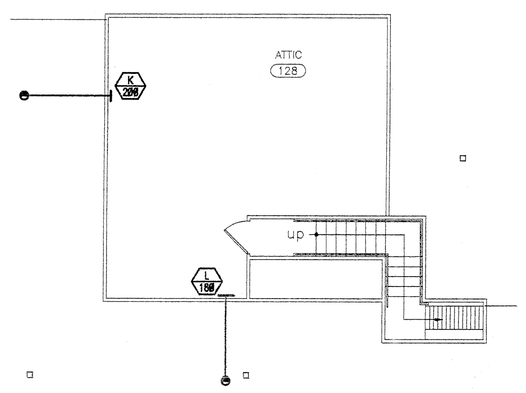

3 M2.1 ATTIC PLAN - MECHANICAL
SCALE: 1/8" = 1'-0"

Denning ENGINEERING
151 OSIGIAN BLVD
SUITE 155
WARNER ROBINS, GEORGIA 31088
(478) 971-2656

Stantec Architecture Inc.
4875 Riverside Drive
Macon, Georgia U.S.A.
31210-1117
Tel. 478.474.6100
Fax. 478.476.6373
www.stantec.com

Stantec

Copyright Reserved

The Contractor shall verify and be responsible for all dimensions. DO NOT scale the drawing - any errors or omissions shall be reported to Stantec Architecture Inc. without delay.
The Copyrights to all designs and drawings are the property of Stantec Architecture Inc. Reproduction or use for any purpose other than that authorized by Stantec Architecture Inc. is forbidden.

Consultants

Legend

Notes

Revision	By	Appd.	Date

Issued	By	Appd.	Date
		DJD	3/19/01
File Name: m04a3-1.dwg	JWK	DJD	BLD	3/20/01
	Dwn.	Chkd.	Dsgn.	Date

Permit-Seal

GEORGIA REGISTERED No. 14181 ENGINEER DAVID J DENNING

Client/Project

MULTI-MODAL TRANSPORTATION ADMINISTRATION BUILDING

DOUGLAS COUNTY, GEORGIA

DOUGLASVILLE, GEORGIA U.S.A.

Title

MECHANICAL FLOOR PLAN, PARTIAL EXHAUST PLAN, AND ATTIC PLAN

Project No.	Scale	
DCO001.000	1/8" = 1'-0"	
Drawing No.	Sheet	Revision
M2.1	2 of 2	0

Server\denning eng\CK Projects\CK-69\DENCKS\CK-69M2.1.dwg Mon Mar 19 10:44:24 2001

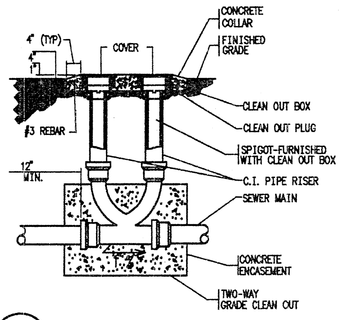

1 P1.1 DOUBLE CLEANOUT DETAIL
NO SCALE

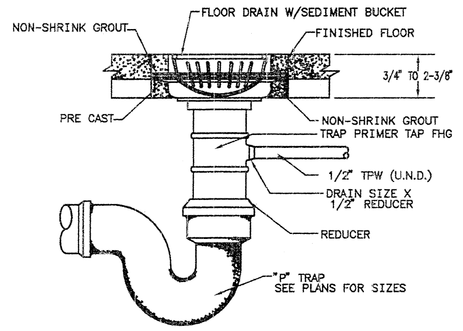

NOTE: WHERE FLOOR COVERING IS TILE, ESTUCHEON FLANGE SHALL RIM TOP OF TILE.

2 P1.1 FLOOR DRAIN DETAIL
NO SCALE

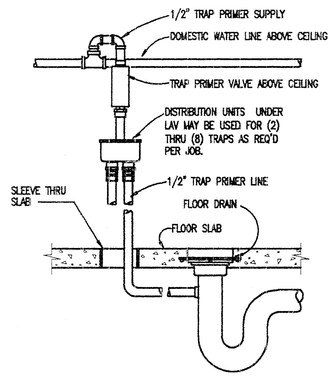

3 P1.1 TRAP PRIMER DETAIL
NO SCALE

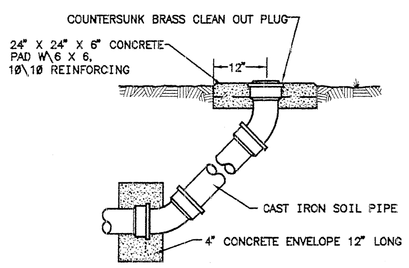

4 P1.1 CLEANOUT TO GRADE DETAIL
NO SCALE

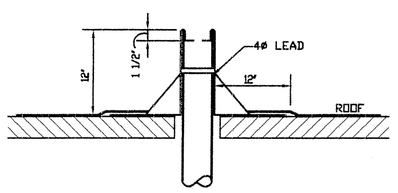

5 P1.1 VENT THRU ROOF DETAIL
NO SCALE

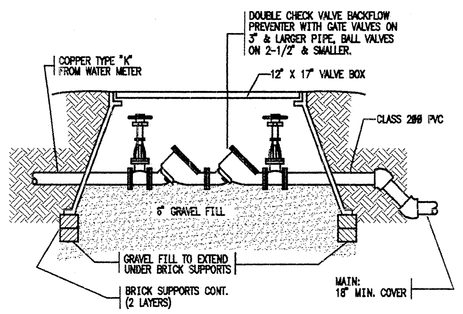

6 P1.1 BACKFLOW PREVENTOR IN VAULT DETAIL
NO SCALE

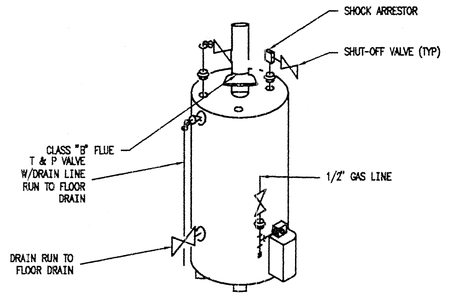

7 P1.1 WATER HEATER DETAIL
NO SCALE

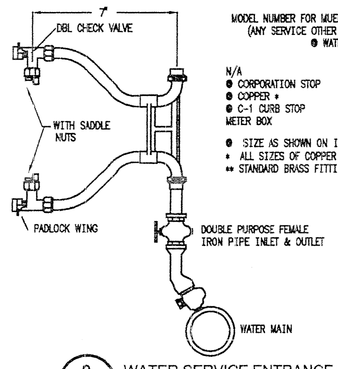

MODEL NUMBER FOR MUELLER PARTS TO BE USED ON WATER SERVICES (ANY SERVICE OTHER THAN STANDARD WILL NOT BE APPROVED)
● WATER SERVICE WITH ● METER
MUELLER OR EQUAL TAP ● TAP TEE
N/A
● CORPORATION STOP H-15000 OR EQUAL
● COPPER x
● C-1 CURB STOP H-15174 MARK II OR SEAL 55-A
METER BOX
● SIZE AS SHOWN ON INDIVIDUAL PLANS
+ ALL SIZES OF COPPER SHALL BE TYPE "L" OR "K" SOFT COPPER PIPE.
** STANDARD BRASS FITTINGS.

8 P1.1 WATER SERVICE ENTRANCE DETAIL
NO SCALE

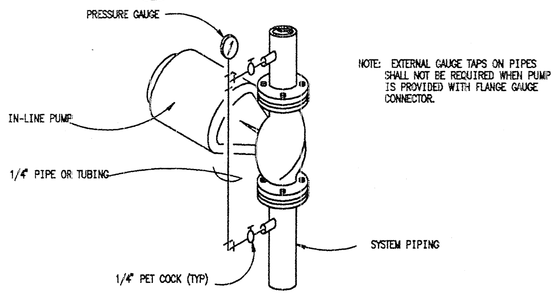

NOTE: EXTERNAL GAUGE TAPS ON PIPES SHALL NOT BE REQUIRED WHEN PUMP IS PROVIDED WITH FLANGE GAUGE CONNECTOR.

9 P1.1 DOMESTIC HOT WATER PUMP DETAIL
NO SCALE

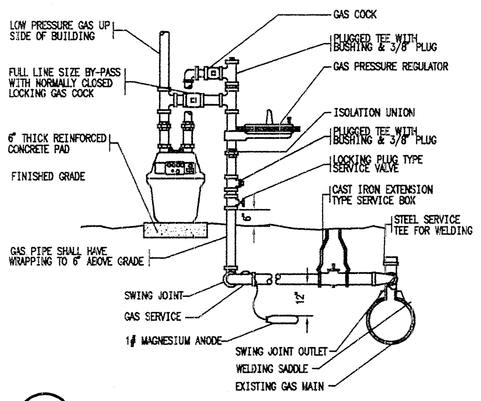

10 P1.1 GAS METER & REGULATOR DETAIL
NO SCALE

PLUMBING FIXTURE SCHEDULE

SYM	FIXTURE	MANUFACTURER	MODEL	NOTES	RIM HEIGHT	COLD WATER BRANCH	COLD WATER CONN.	HOT WATER BRANCH	HOT WATER CONN.	WASTE BRANCH	WASTE CONN.	ACCESSORIES
1	WATER CLOSET, WALL TYPE	KOHLER	K-4350	4, 8	15"	-	1"	-	-	-	3"	SLOAN REGAL 115-1.6-YK FLUSH VALVE, BENEKE 527SS SEAT
2	WATER CLOSET, WALL TYPE, ADA	KOHLER	K-4302	3, 4, 8	17"	-	1"	-	-	-	3"	SLOAN REGAL 918-1.6-SW FLUSH VALVE, BENEKE 527SS SEAT
3	WALL HYDRANT	ZURN	Z-1300	4, 8	-	3/4"	1/2"	-	-	-	-	-
4	SINGLE COMP SINK	ELKAY	LR-2219	1, 6	-	1/2"	1/2"	1/2"	1/2"	2"	1-1/2"	MCGUIRE 171STOPS, 8912 P-TRAP, 151-A BASKET STRANER, CHICAGO 786
5	URINAL, WALL TYPE, ADA	KOHLER	K-5016-ET	3, 4, 8, 5	17"	1"	3/4"	-	-	4"	3"	SLOAN REGAL 186-1-YB FLUSH VALVE
6	SERVICE SINK, FLOOR MOUNTED	KOHLER	K-6710	2	-	3/4"	1/2"	3/4"	1/2"	3"	2"	McGUIRE 171 STOPS, KOHLER K-6638 TRAP, CHICAGO 897 FAUCET
7	LAVATORY, WALL TYPE, ADA	KOHLER	K-1728	3, 8, 5	34"	1/2"	3/8"	1/2"	3/8"	2"	1-1/4"	McGUIRE 171 STOPS, 8872 P-TRAP, 155-A GRID DRAIN, EBC 1K INSULATION KIT, CHICAGO 895-317 FAUCET
8	LAVATORY, UNDERCOUNTER TYPE	KOHLER	K-2257	1	34"	1/2"	3/8"	1/2"	3/8"	2"	1-1/4"	McGUIRE 171 STOPS, 8872 P-TRAP, 155-A GRID DRAIN, CHICAGO 1404A FAUCET
9	LAVATORY, UNDERCOUNTER TYPE, ADA	KOHLER	K-2257	1, 3	34"	1/2"	3/8"	1/2"	3/8"	2"	1-1/4"	McGUIRE 171 STOPS, 8872 P-TRAP, 155-A GRID DRAIN, EBC 1K INSULATION KIT, CHICAGO 404A-317 FAUCET
10	DRINKING FOUNTAIN, HANDICAPPED	OASIS	MLFBCR	3, 4, 8	17-1/2"	1/2"	3/8"	-	-	2"	1-1/4"	McGUIRE 2167 STOPS, 8872 P-TRAP
11	FLOOR DRAIN	ZURN	Z-453	-	-	-	-	-	-	2"	2"	NICKEL BRONZE WITH 1/2" TRAP PRIMER
12	SINGLE CLEANOUT	ZURN	Z-1440-BP	-	-	-	-	-	-	-	-	-
13	DOUBLE CLEANOUT	ZURN	Z-1440-BP	-	-	-	-	-	-	-	-	FIELD FABRICATE DOUBLE CLEANOUT
14	WATER HEATER	A.O. SMITH	BT-65	2	-	-	-	-	-	-	-	50 GAL GAS, 50,000 BTUH INPUT
15	HOT WATER CIRCULATION PUMP	BELL & GOSSETT	NRF-22	-	-	-	-	-	-	-	-	-

NOTES:
1. COUNTERTOP.
2. FLOOR MOUNTED FIXTURE.
3. HANDICAP FIXTURE.
4. COLD WATER ONLY.
5. PROVIDE NEW CARRIER AS SPECIFIED.
6. GOOSENECK SPOUT.
7. NOT USED.
8. WALL HUNG FIXTURE.

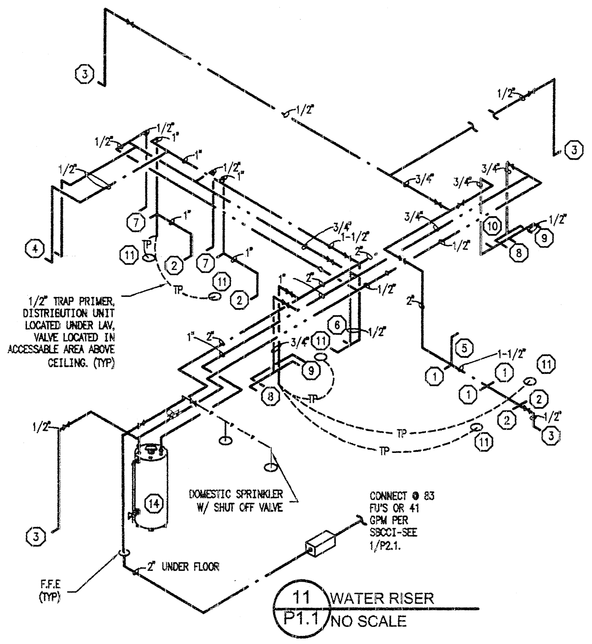

11 P1.1 WATER RISER
NO SCALE

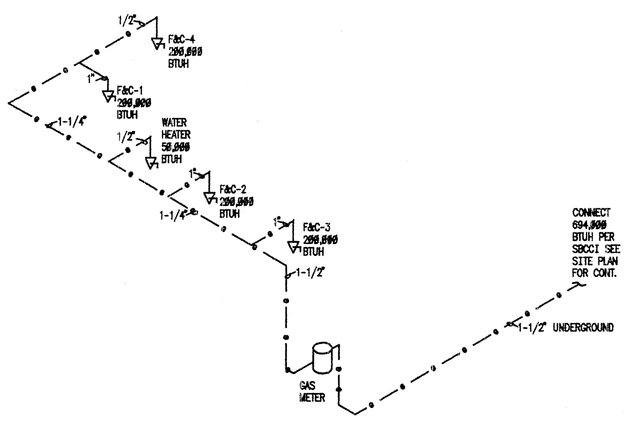

12 P1.1 GAS RISER
NO SCALE

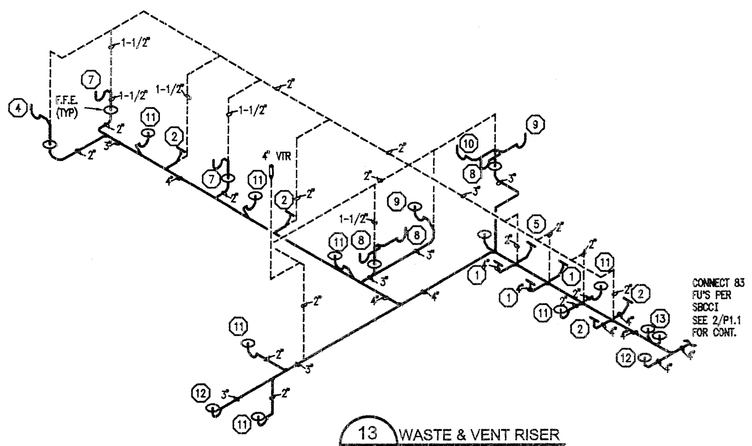

13 P1.1 WASTE & VENT RISER
NO SCALE

PLUMBING LEGEND

NOTE: ALL SYMBOLS MAY NOT APPEAR ON DRAWINGS

SYMBOL	DESCRIPTION
	BALL VALVE
	CHECK VALVE
	GAS COCK
	GATE VALVE
VTR	VENT THRU ROOF
FCO	CLEAN OUT IN FLOOR
GCO	CLEAN OUT IN GRADE
	HUB DRAIN
	FLOOR DRAIN
WCO	CLEAN OUT IN WALL
	RECIRCULATION LINE
	EXISTING SANITARY SEWER
	VENT
	SANITARY SEWER BELOW GRADE
	COLD WATER
	HOT WATER
G	GAS LINE
TP	TRAP PRIMER LINE
	GLOBE VALVE
	DOUBLE CHECK VALVE ASSEM.

Denning ENGINEERING
151 OSIGIAN BLVD
SUITE 155
WARNER ROBINS, GEORGIA 31088
(478) 971-2656

Stantec Architecture Inc.
4875 Riverside Drive
Macon, Georgia U.S.A.
31210-1117
Tel. 478.474.6100
Fax. 478.476.8373
www.stantec.com

Stantec

Copyright Reserved

The Contractor shall verify and be responsible for all dimensions. DO NOT scale the drawing - any errors or omissions shall be reported to Stantec Architecture Inc. without delay.
The Copyrights to all designs and drawings are the property of Stantec Architecture Inc. Reproduction or use for any purpose other than that authorized by Stantec Architecture Inc. is forbidden.

Consultants

Legend

Notes

Revision	By	Appd.	Date

Issued	By	Appd.	Date
	SPK		04/10/01
File Name: m04e3-1.dwg	JWK	DJD	BLD	3/20/01
	Dwn.	Chkd.	Dsgn.	Date

Permit-Seal

GEORGIA REGISTERED No. 15867 PROFESSIONAL ENGINEER DAVID J. DENNING

Client/Project

MULTI-MODAL TRANSPORTATION ADMINISTRATION BUILDING

DOUGLAS COUNTY, GEORGIA

DOUGLASVILLE, GEORGIA U.S.A.

Title

PLUMBING DETAILS, LEGEND SCHEDULES, AND RISERS

Project No.	Scale	
DC0001.000	NO SCALE	
Drawing No.	Sheet	Revision
P1.1	1 of 2	0

Server\Udenning eng\2K Projects\2K-EGVDENCNS\2K-EGP1.1.dwg Mon Mar 19 10:42:59 2001

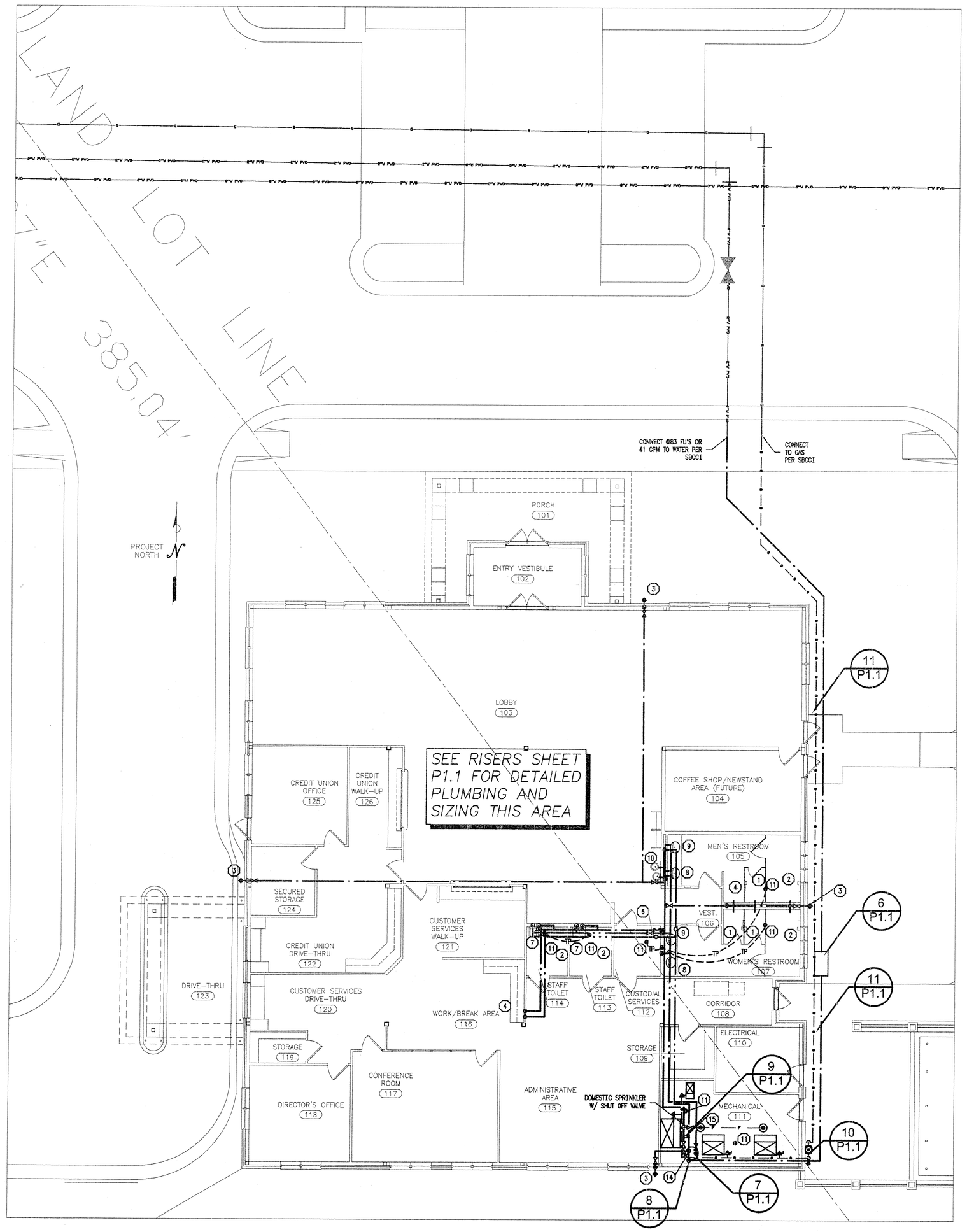

1 P2.1 FLOOR PLAN - WATER & GAS PLUMBING
SCALE: 1/8" = 1'-0"

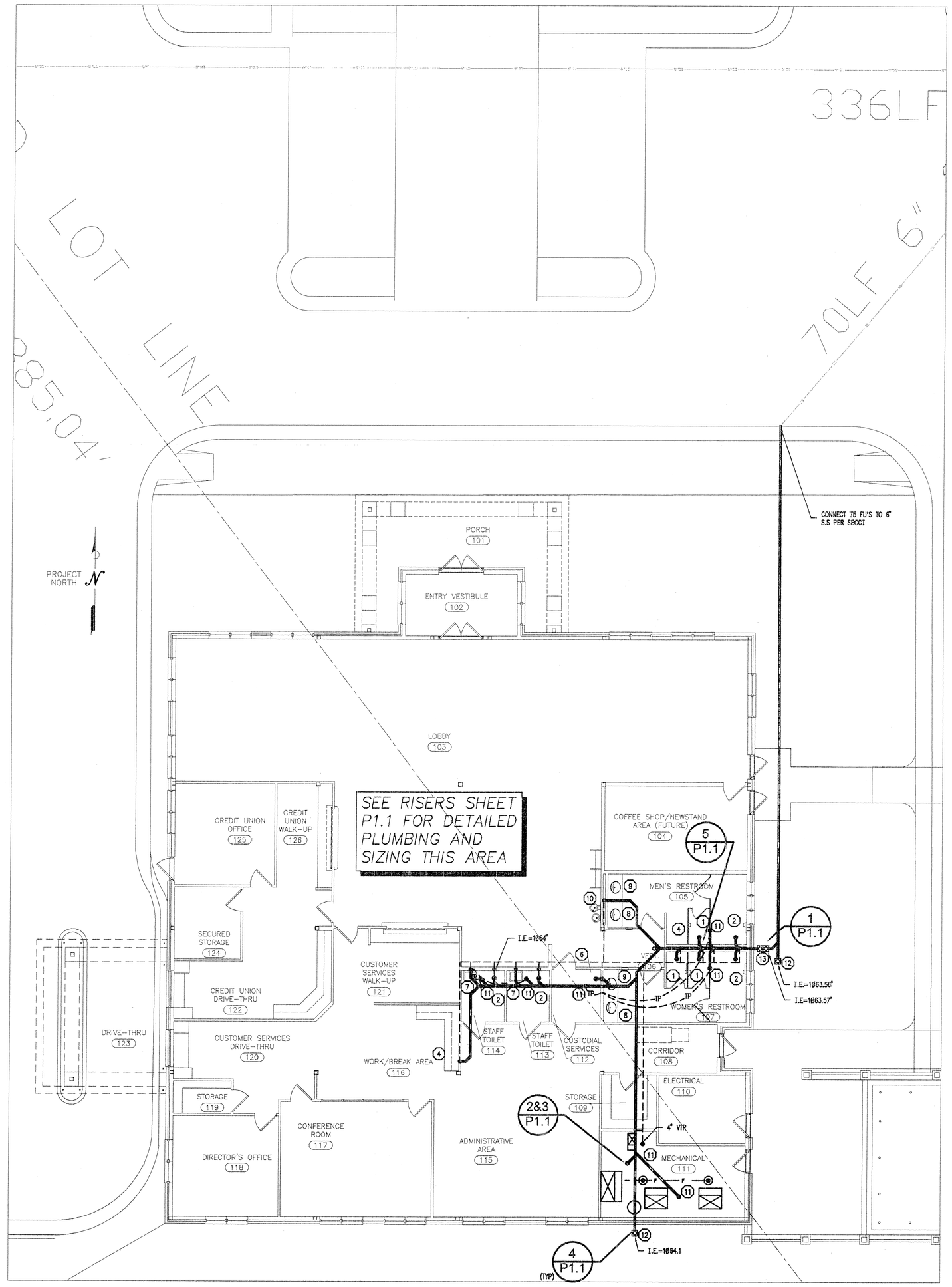

2 P2.1 FLOOR PLAN - WASTE & VENT PLUMBING
SCALE: 1/8" = 1'-0"

Denning ENGINEERING
151 OSIGIAN BLVD
SUITE 155
WARNER ROBINS, GEORGIA 31088
(478) 971-2656

Stantec Architecture Inc.
4875 Riverside Drive
Macon, Georgia U.S.A.
31210-1117
Tel. 478.474.6100
Fax. 478.476.8373
www.stantec.com

Stantec

Copyright Reserved

The Contractor shall verify and be responsible for all dimensions. DO NOT scale the drawing – any errors or omissions shall be reported to Stantec Architecture Inc. without delay.
The Copyrights to all designs and drawings are the property of Stantec Architecture Inc. Reproduction or use for any purpose other than that authorized by Stantec Architecture Inc. is forbidden.

Consultants

Legend

Notes

Revision	By	Appd.	Date

Issued	By	Appd.	Date
File Name: m04e3-1.dwg	JWK	DJD	03/19/01
	Dwn.	Chkd.	Dsgn.	Date

Permit-Seal

GEORGIA REGISTERED PROFESSIONAL ENGINEER No. 22615 DAVID DENNING

Client/Project

MULTI-MODAL TRANSPORTATION ADMINISTRATION BUILDING

DOUGLAS COUNTY, GEORGIA

DOUGLASVILLE, GEORGIA U.S.A.

Title

PLUMBING FLOOR PLANS

Project No.	Scale	
DC0001.000	1/8" = 1'-0"	
Drawing No.	Sheet	Revision
P2.1	2 of 2	0

server\dennin g eng\2k Projects\2k-69\CHEDKS\2K69P21.dwg Mon Mar 19 10:45:33 2001

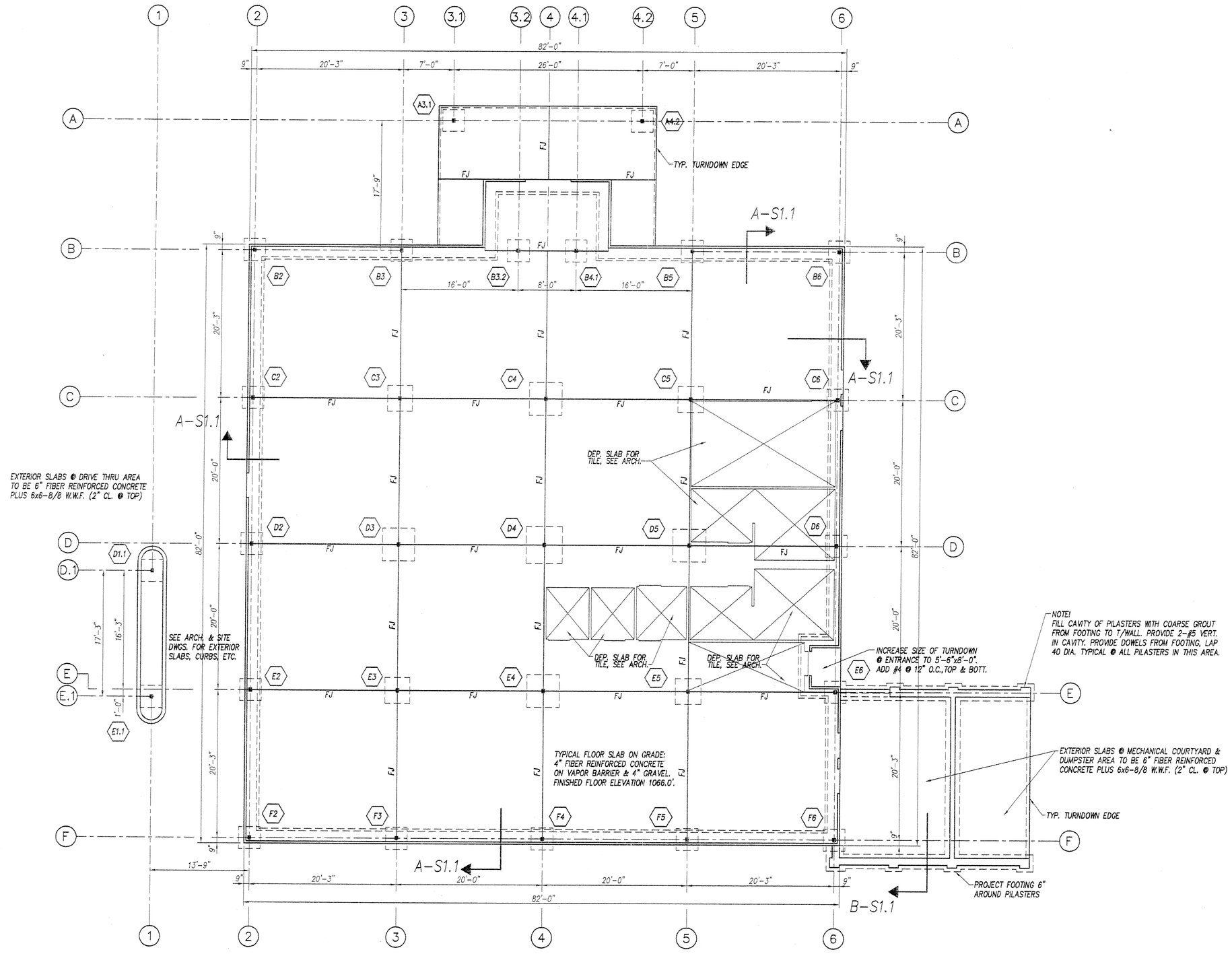

FOUNDATION AND FLOOR SLAB PLAN

SCALE: 1/8"=1'-0"

COLUMN SCHEDULE

COL. NO.	FOOTING SIZE	FOOTING REINF. E. W.	FOOTING ELEV. @ TOP	COLUMN SIZE	COLUMN BASE PL SIZE	BASE BASE DET.	CAP PL SIZE	REMARKS	COL. NO.
A3.1	3'-0"x3'-0"x12"	5-#4	1064.5'	TS 5x5x9⅛	PL 1"x13"x1'-1"	A	PL ½"x7"x0'-9"		A3.1
A4.2	3'-0"x3'-0"x12"	5-#4	1064.5'	TS 5x5x9⅛	PL 1"x13"x1'-1"	A	PL ½"x7"x0'-9"		A4.2
B2	3'-0"x3'-0"x12"	5-#4	1064.5'	TS 5x5x9⅛	PL 1"x13"x1'-1"	A	PL ½"x7"x0'-9"		B2
B3	3'-0"x3'-0"x12"	5-#4	1064.5'	TS 5x5x9⅛	PL 1"x13"x1'-1"	A	PL ½"x7"x1'-0"		B3
B3.2	3'-0"x3'-0"x12"	5-#4	1064.5'	TS 5x5x9⅛	PL 1"x13"x1'-1"	A	PL ½"x7"x1'-0"		B3.2
B4.1	3'-0"x3'-0"x12"	5-#4	1064.5'	TS 5x5x9⅛	PL 1"x13"x1'-1"	A	PL ½"x7"x1'-0"		B4.1
B5	3'-0"x3'-0"x12"	5-#4	1064.5'	TS 5x5x9⅛	PL 1"x13"x1'-1"	A	PL ½"x7"x1'-0"		B5
B6	3'-0"x3'-0"x12"	5-#4	1064.5'	TS 5x5x9⅛	PL 1"x13"x1'-1"	A	PL ½"x7"x0'-9"		B6
C2	3'-0"x3'-0"x12"	5-#4	1064.5'	TS 5x5x9⅛	PL 1"x13"x1'-1"	A	PL ½"x7"x0'-9"		C2
C3	3'-6"x3'-6"x12"	6-#4	1065.33'	TS 6x6x½	PL 1¼"x16"x1'-4"	B	PL ½"x7"x1'-0"		C3
C4	4'-6"x4'-6"x12"	9-#4	1065.33'	TS 6x6x½	PL 1¼"x16"x1'-4"	B	PL ½"x7"x1'-0"		C4
C5	3'-6"x3'-6"x12"	6-#4	1065.33'	TS 6x6x½	PL 1¼"x16"x1'-4"	B	PL ½"x7"x1'-0"		C5
C6	3'-0"x3'-0"x12"	5-#4	1064.5'	TS 5x5x9⅛	PL 1"x13"x1'-1"	A	PL ½"x7"x0'-9"		C6
D1.1	3'-0"x3'-0"x12"	5-#4	1064.5'	TS 5x5x9⅛	PL 1"x13"x1'-1"	A	PL ½"x7"x0'-9"		D1.1
D2	3'-0"x3'-0"x12"	5-#4	1064.5'	TS 5x5x9⅛	PL 1"x13"x1'-1"	A	PL ½"x7"x1'-0"		D2
D3	4'-6"x4'-6"x12"	9-#4	1065.33'	TS 7x7x½	PL 1¼"x16"x1'-4"	C	PL ½"x8"x1'-1"		D3
D4	5'-0"x5'-0"x14"	7-#5	1065.33'	TS 7x7x½	PL 1¼"x16"x1'-4"	C	PL ½"x8"x1'-1"		D4
D5	4'-6"x4'-6"x12"	9-#4	1065.33'	TS 7x7x½	PL 1¼"x16"x1'-4"	C	PL ½"x8"x1'-1"		D5
D6	3'-0"x3'-0"x12"	5-#4	1064.5'	TS 5x5x9⅛	PL 1"x13"x1'-1"	A	PL ½"x7"x1'-0"		D6
E1.1	3'-0"x3'-0"x12"	5-#4	1064.5'	TS 5x5x9⅛	PL 1"x13"x1'-1"	A	PL ½"x7"x0'-9"		E1.1
E2	3'-0"x3'-0"x12"	5-#4	1064.5'	TS 5x5x9⅛	PL 1"x13"x1'-1"	A	PL ½"x7"x0'-9"		E2
E3	3'-6"x3'-6"x12"	6-#4	1065.33'	TS 6x6x½	PL 1¼"x16"x1'-4"	B	PL ½"x7"x1'-0"		E3
E4	4'-6"x4'-6"x12"	9-#4	1065.33'	TS 6x6x½	PL 1¼"x16"x1'-4"	B	PL ½"x7"x1'-0"		E4
E5	3'-6"x3'-6"x12"	6-#4	1065.33'	TS 6x6x½	PL 1¼"x16"x1'-4"	B	PL ½"x7"x1'-0"		E5
E6	3'-0"x3'-0"x12"	5-#4	1064.5'	TS 5x5x9⅛	PL 1"x13"x1'-1"	A	PL ½"x7"x0'-9"		E6
F2	3'-0"x3'-0"x12"	5-#4	1064.5'	TS 5x5x9⅛	PL 1"x13"x1'-1"	A	PL ½"x7"x0'-9"		F2
F3	3'-0"x3'-0"x12"	5-#4	1064.5'	TS 5x5x9⅛	PL 1"x13"x1'-1"	A	PL ½"x7"x1'-0"		F3
F4	3'-0"x3'-0"x12"	5-#4	1064.5'	TS 5x5x9⅛	PL 1"x13"x1'-1"	A	PL ½"x7"x1'-0"		F4
F5	3'-0"x3'-0"x12"	5-#4	1064.5'	TS 5x5x9⅛	PL 1"x13"x1'-1"	A	PL ½"x7"x1'-0"		F5
F6	3'-0"x3'-0"x12"	5-#4	1064.5'	TS 5x5x9⅛	PL 1"x13"x1'-1"	A	PL ½"x7"x0'-9"		F6

AN ALLOWABLE SOIL BEARING PRESSURE OF 3000 PSF HAS BEEN ASSUMED. IF EXISTING CONDITIONS INDICATE OTHERWISE, THE ARCHITECT SHALL BE NOTIFIED IMMEDIATELY.

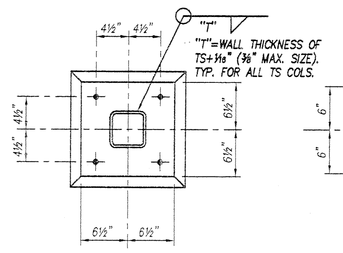

TS 5x5 COLUMN
BASE PL 1"x13"x1'-1"
4-7/8"ø ANCHOR BOLTS

DETAIL A

SCALE: 1"=1'-0"

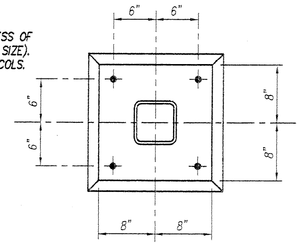

TS 6x6 COLUMN
BASE PL 1¼"x16"x1'-4"
4-1"ø ANCHOR BOLTS

DETAIL B

SCALE: 1"=1'-0"

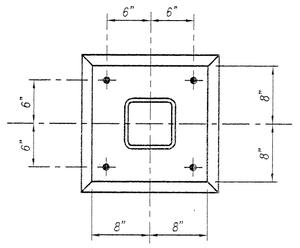

TS 7x7 COLUMN
BASE PL 1¼"x16"x1'-4"
4-1"ø ANCHOR BOLTS

DETAIL C

SCALE: 1"=1'-0"

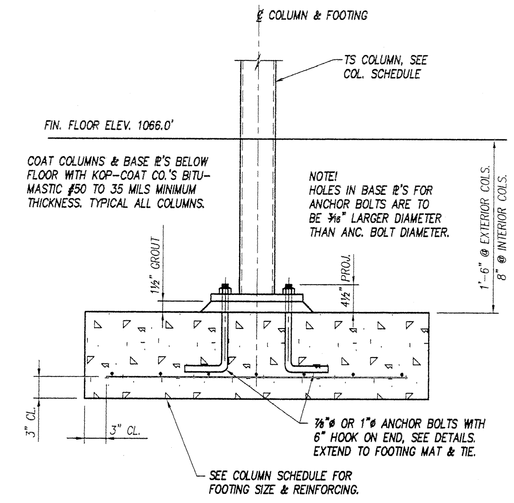

TYPICAL COLUMN & FOOTING BASE DETAIL

SCALE: 1"=1'-0"

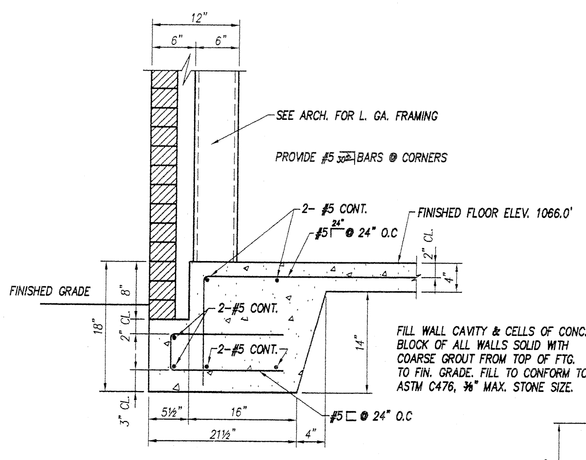

NOTE!
THIS DETAIL ASSUMES THAT FINISHED GRADE IS 6" BELOW FIN. FLOOR. IF CONDITIONS DIFFER, NOTIFY ARCHITECT IMMEDIATELY.

A-S1.1

SCALE : 1"=1'-0"

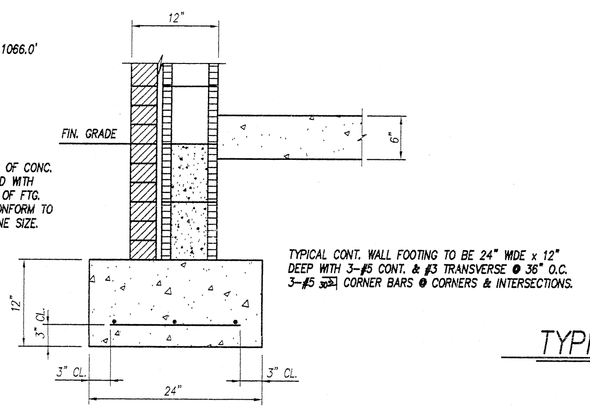

B-S1.1 (AT DUMPSTERS)

SCALE: 1"=1'-0"

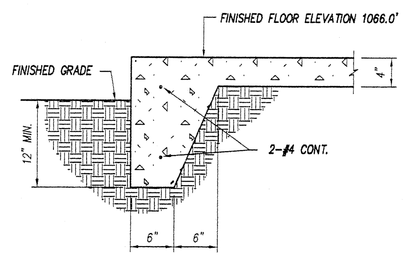

TYPICAL EXTERIOR SLAB TURNDOWN

SCALE : 1"=1'-0"

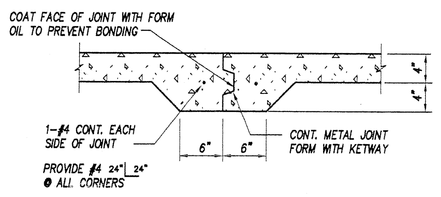

FLOOR JOINT DETAIL

SCALE : 1"=1'-0"

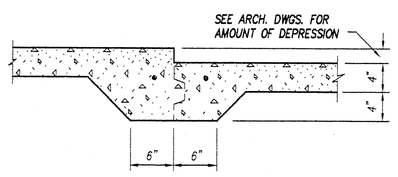

TYPICAL SLAB DEPRESSION

SCALE : 1"=1'-0"

Stantec Architecture Inc.
4875 Riverside Drive
Macon, Georgia U.S.A.
31210-1117
Tel. 478.474.6100
Fax. 478.476.8373
www.stantec.com

Stantec

Copyright Reserved

The Contractor shall verify and be responsible for all dimensions. DO NOT scale the drawing - any errors or omissions shall be reported to Stantec Architecture Inc. without delay.
The Copyrights to all designs and drawings are the property of Stantec Architecture Inc. Reproduction or use for any purpose other than that authorized by Stantec Architecture Inc. is forbidden.

Consultants

Legend

Notes

Revision	By	Appd.	Date

Issued	By	Appd.	Date

File Name:	DWN	CHKD	DSGN	DATE
	ME	LCB	DSP	3-9-01

STRUCTURAL DESIGN BY
PI-TECH, INC.

GEORGIA REGISTERED No. 24150 PROFESSIONAL ENGINEER DARRELL S. PIPKINS

Client/Project

MULTI-MODAL TRANSPORTATION ADMINISTRATION BUILDING

DOUGLAS COUNTY, GEORGIA

DOUGLASVILLE, GEORGIA U.S.A.

Title

FOUNDATION AND FLOOR SLAB PLAN

Project No.	Scale	
DCO001.000	AS NOTED	
Drawing No.	**Sheet**	**Revision**
S1.1	1 of 3	0

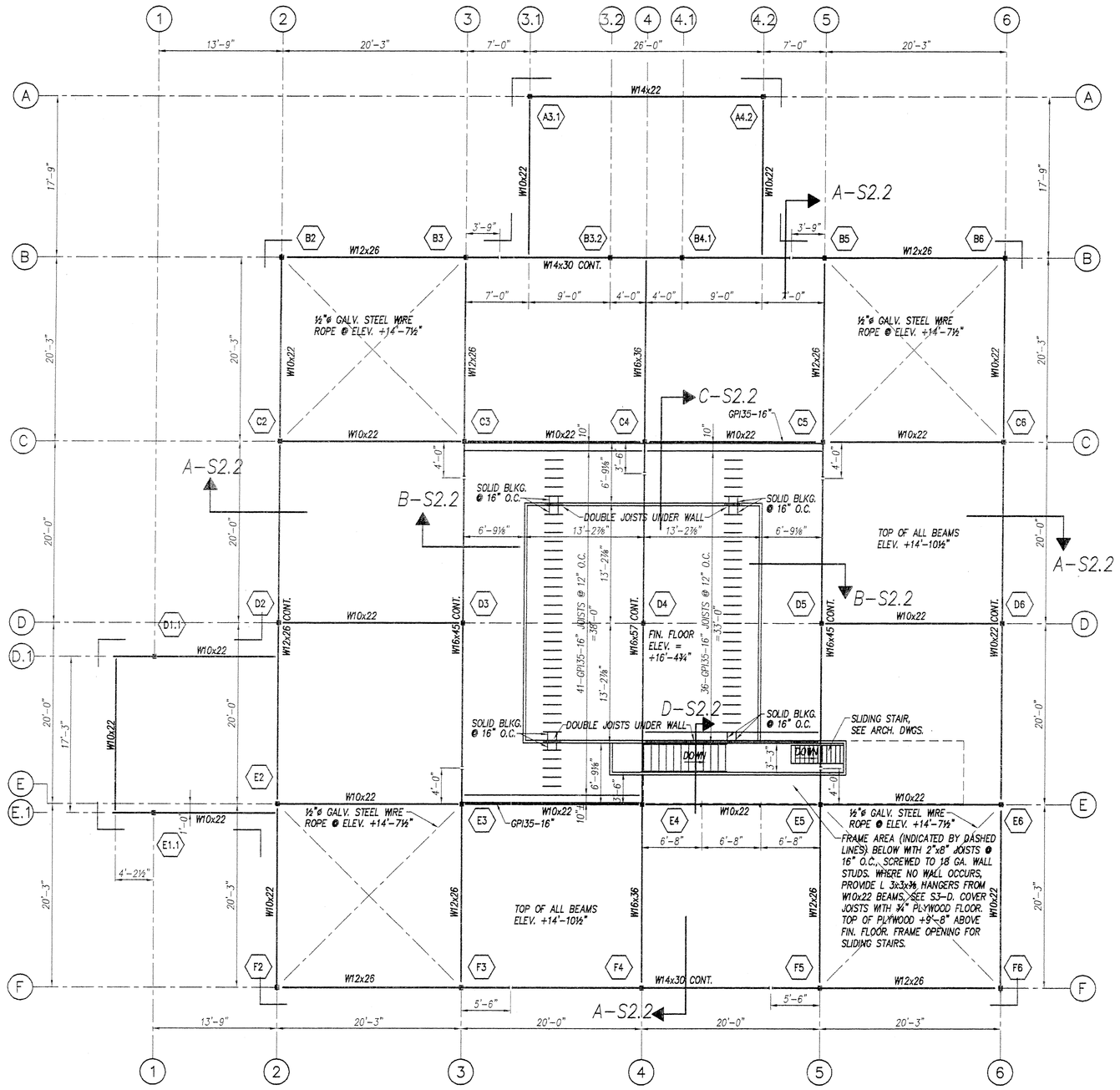

STORAGE FLOOR & ROOF SUPPORT FRAMING PLAN

SCALE: 1/8"=1'-0"

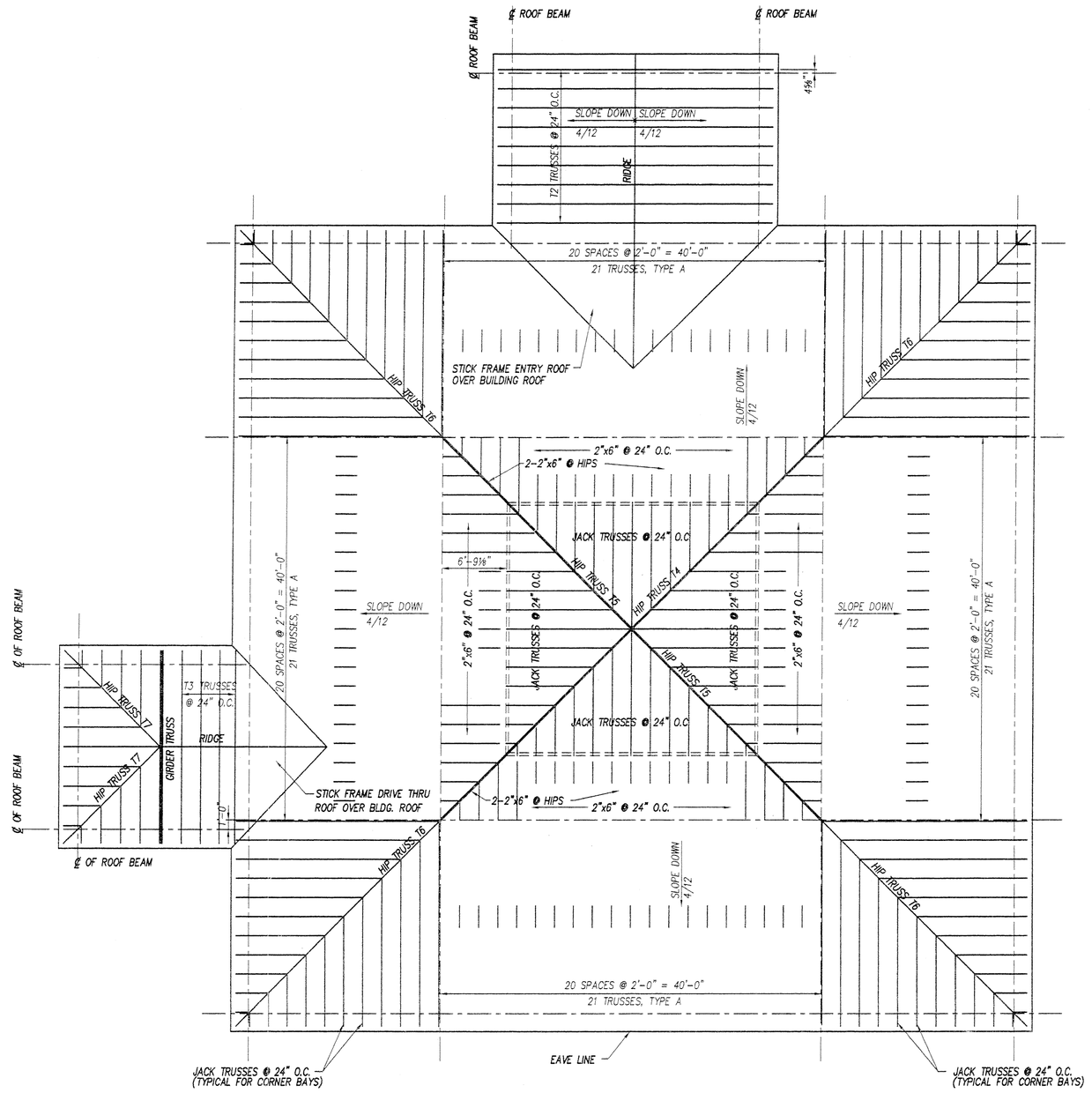

ROOF FRAMING PLAN

SCALE: 1/8"=1'-0"

PREFABRICATED WOOD TRUSS NOTES

1- COMFORM TO APPLICABLE STANDARDS OF THE STANDARD BUILDING CODE AND THE TRUSS PLATE INSTITUTE, INCLUDING THE NATIONAL DESIGN STANDARD FOR METAL PLATE CONNECTED WOOD TRUSS CONSTRUCTION.
2- LIVE LOADS ARE 20 PSF FOR ROOF.
3- DEAD LOADS, SNOW LOADS AND WIND LOADS ARE TO BE IN ACCORDANCE WITH THE ABOVE REFERENCED CODE.
4- DESIGN FOR TRUSSES IS TO BE PERFORMED BY AN ENGINEER, EMPLOYED BY THE TRUSS MANUFACTURER AND LICENSED IN THE STATE OF GEORGIA. ALL TRUSS DIMENSIONS SHALL BE VERIFIED BY MANUFACTURER.
5- DESIGN CALCULATIONS SHALL BE SUBMITTED TO THE ARCHITECT FOR REVIEW PRIOR TO FABRICATION OF ANY TRUSSES.
6- MEMBER SIZES ARE TO BE DETERMINED BY TRUSS ENGINEER'S CALCULATIONS, BUT MINIMUM SIZES FOR TOP AND BOTTOM CHORDS AND SOME OTHER NOTED MEMBERS TO BE 2"x6", UNLESS OTHERWISE NOTED. ALL MEMBERS FOR ALL TRUSSES TO BE MINIMUM #2 OR BETTER SOUTHERN YELLOW PINE.
7- ANCHOR EACH TRUSS TO SUPPORTS WITH 2-SIMPSON H5 HURRICANE ANCHORS, EACH END OF TRUSS.

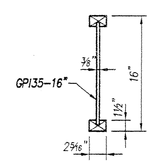

TYPICAL FLOOR JOIST

SCALE: 1"=1'-0"

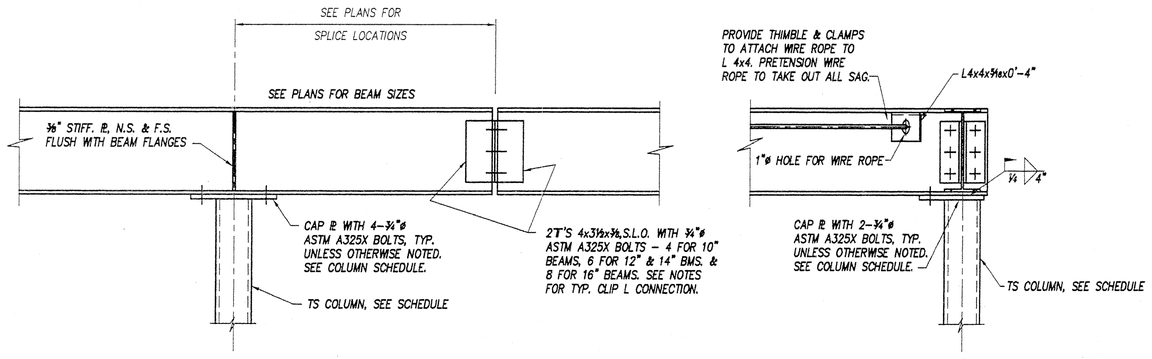

TYPICAL BEAM SPLICE

SCALE: 1"=1'-0"

CONNECTION AT ENDS & CORNERS

SCALE: 1"=1'-0"

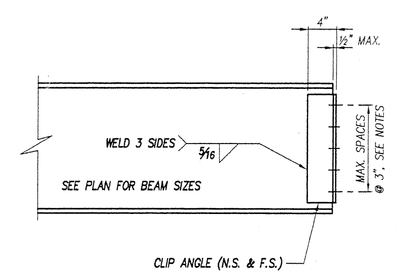

TYPICAL CLIP ANGLE CONNECTION

NO SCALE

NOTES:
1. CLIP ANGLES (N.S. & F.S.) TO BE SHOP WELDED. LENGTH OF CLIP ANGLES AND NUMBER OF BOLTS SHALL BE MAXIMUM FOR BEAM OF GIVEN DEPTH. CLIP ANGLES SHALL BE L4x3½x⅜ (S.L.O.), WITH LEG MODIFICATIONS AS REQUIRED FOR DETAILING DIMENSIONS AND CLEARANCES. HOLES SHALL BE 13/16"ø FOR ¾"ø, A325 BOLTS WITH THREADS EXCLUDED FROM THE SHEAR PLANES.

2. USE AT BEAM TO BEAM CONNECTIONS, UNLESS SHOWN OR NOTED OTHERWISE.

3. WHERE BEAM WEB THICKNESS IS ¼" OR LESS, CLIP ANGLES MAY BE 5/16" THICK WITH ¼" FILLET WELDS ON 3 SIDES.

4. WHERE BEAM WEB/FLANGE MUST BE COPED FOR CLEARANCES, PROVIDE ½" MAXIMUM CLEARANCE. PROVIDE ½" RADIUS ON ALL COPES. RE-ENTRANT CUTS SHALL BE CAUSE FOR REJECTION.

Stantec Architecture In
4875 Riverside Drive
Macon, Georgia U.S.A.
31210-1117
Tel. 478.474.6100
Fax. 478.476.8373
www.stantec.com

Stantec

Copyright Reserved

The Contractor shall verify and be responsible for all dimen NOT scale the drawing - any errors or omissions shall be Stantec Architecture Inc. without delay.
The Copyrights to all designs and drawings are the property Stantec Architecture Inc. Reproduction or use for any purpo that authorized by Stantec Architecture Inc. is forbidden.

Consultants

Legend

Notes

Revision	By	App

Issued	By	App

File Name:	DWN	CHKD	DSGN
	ME	LCB	DSP

STRUCTURAL DESIGN BY
PI-TECH, INC.

GEORGIA REGISTERED No. 24195 PROFESSIONAL ENGINEER DANIEL S. PIPKINS

Client/Project

MULTI-MODAL TRANSPORTATION ADMINISTRATION BUILDING

DOUGLAS COUNTY, GEORGIA

DOUGLASVILLE, GEORGIA U.S.A.

Title

STORAGE FLOOR AND ROOF FRAMING PLAN

Project No.	Scale
DCO001.000	AS NOTED

Drawing No.	Sheet	Rev
S2.1	2 of 3	

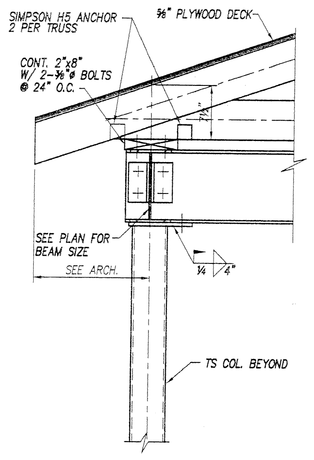

A-S2.2
1"=1'-0"

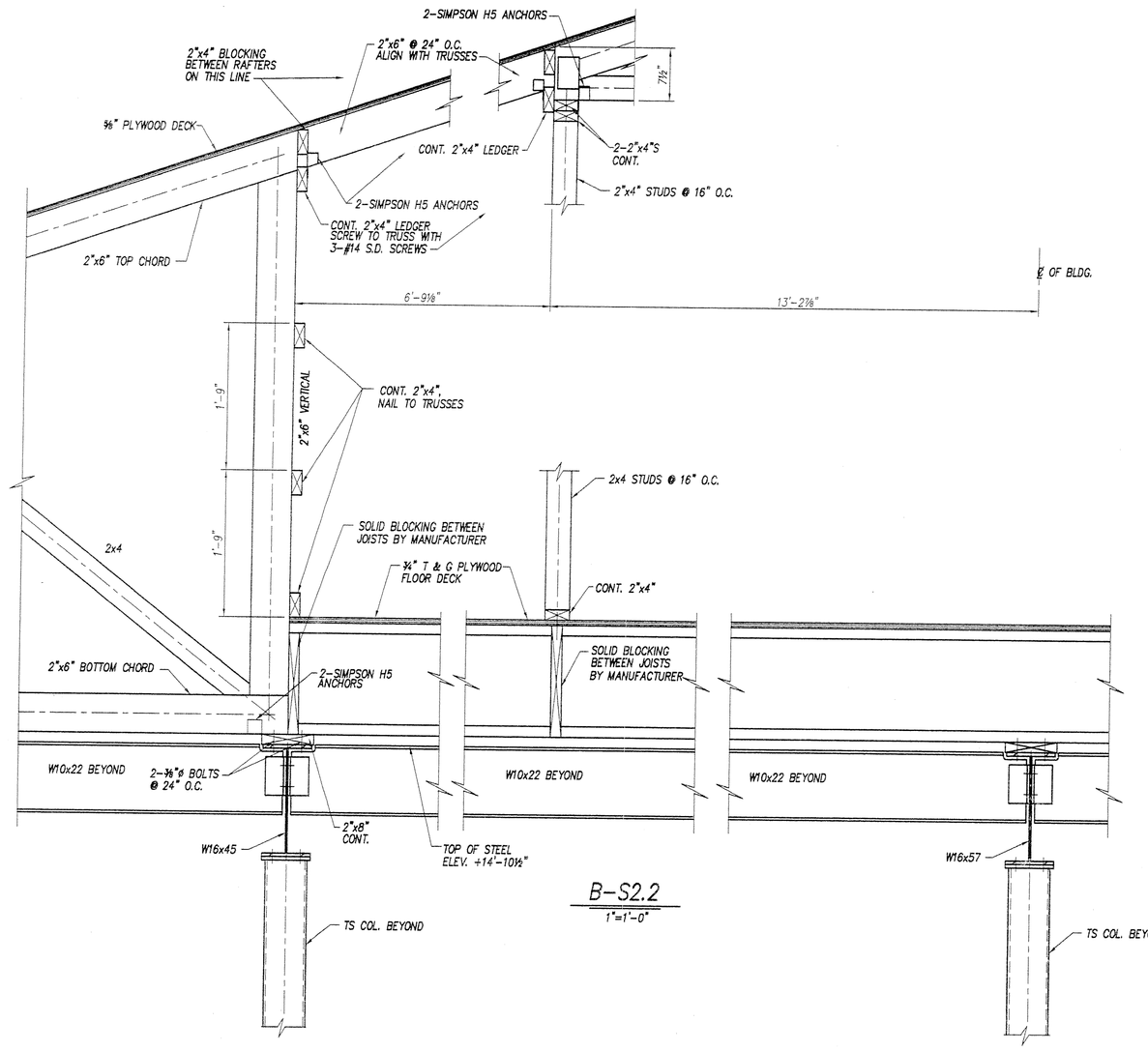

B-S2.2
1"=1'-0"

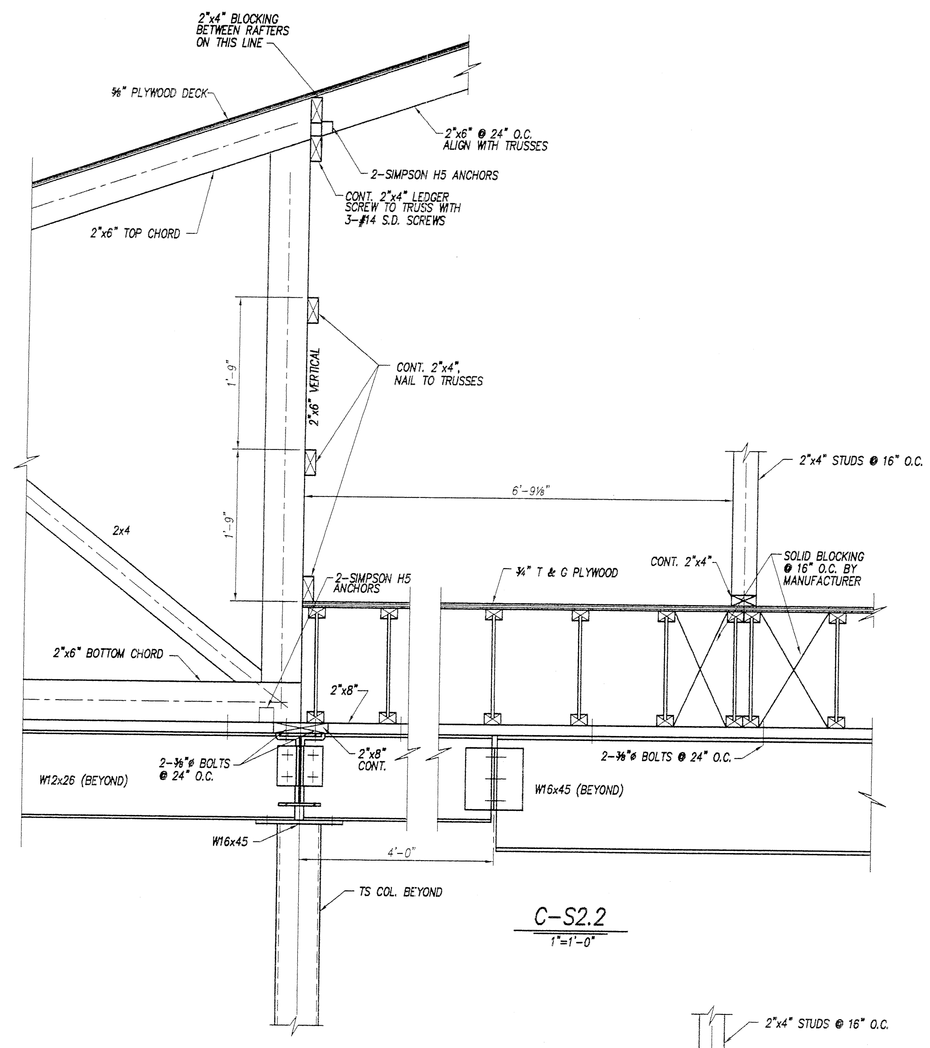

C-S2.2
1"=1'-0"

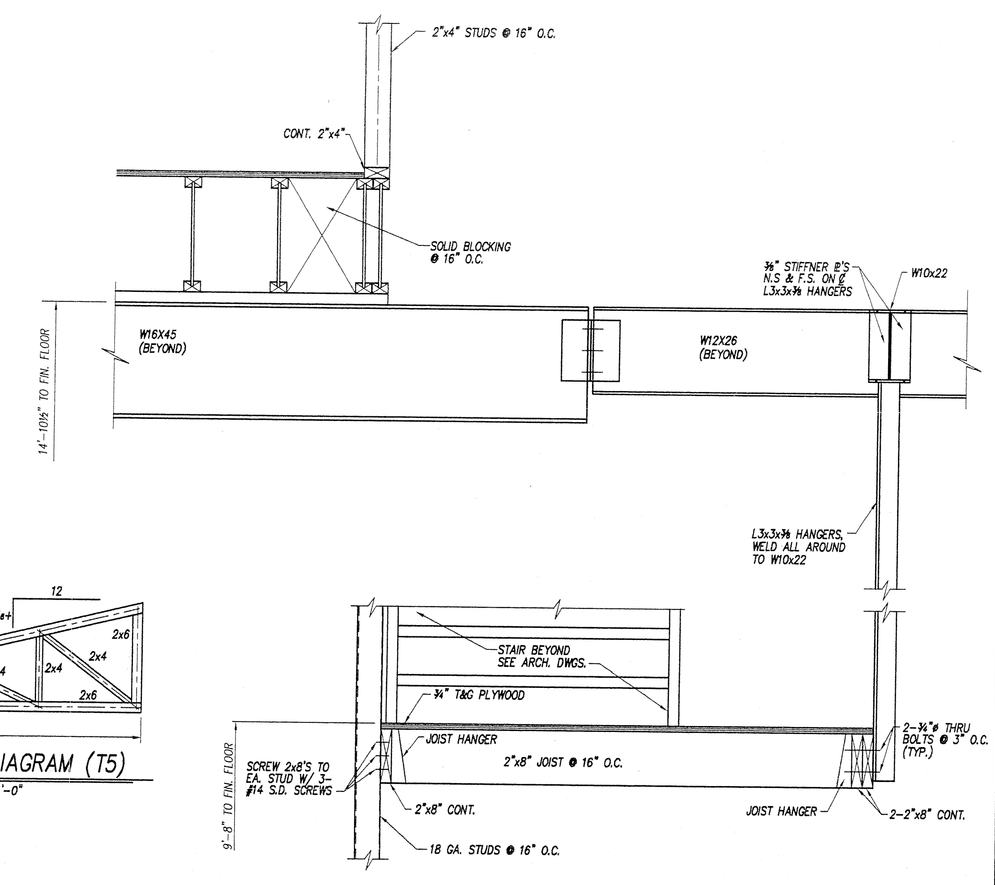

D-S2.2
1"=1'-0"

GENERAL NOTES:
1- SEE ARCH. FOR DIMENSIONS AND END CONDITIONS OF ALL TRUSSES.

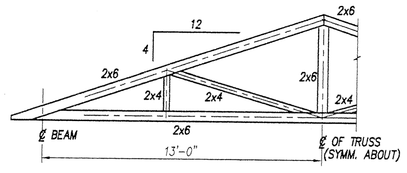

ENTRY TRUSS DIAGRAM (T2)
¼"=1'-0"

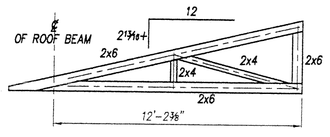

HIP TRUSS DIAGRAM (T7)
¼"=1'-0"

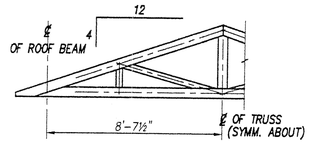

DRIVE THRU TRUSS DIAGRAM (T3)
¼"=1'-0"

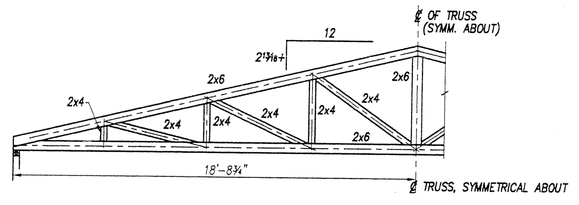

HIP TRUSS DIAGRAM (T4)
¼"=1'-0"

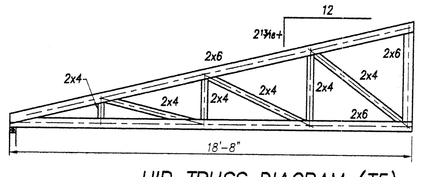

HIP TRUSS DIAGRAM (T5)
¼"=1'-0"

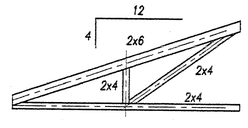

JACK TRUSS DIAGRAM
¼"=1'-0"

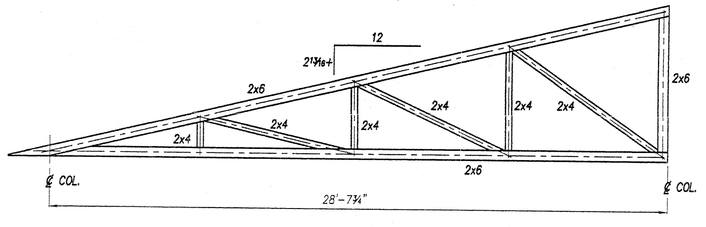

HIP TRUSS DIAGRAM (T6)
¼"=1'-0"

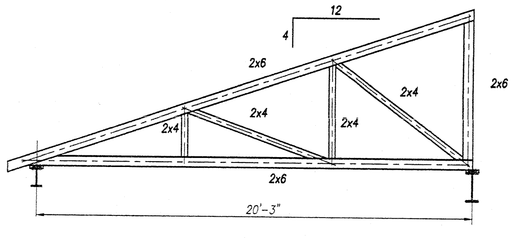

TRUSS DIAGRAM (TYPE A)
¼"=1'-0"

Stantec
Stantec Architecture Inc.
4875 Riverside Drive
Macon, Georgia U.S.A.
31210-1117
Tel. 478.474.6100
Fax. 478.476.8373
www.stantec.com

Copyright Reserved
The Contractor shall verify and be responsible for all dimensions. DO NOT scale the drawing - any errors or omissions shall be reported to Stantec Architecture Inc. without delay.
The Copyrights to all designs and drawings are the property of Stantec Architecture Inc. Reproduction or use for any purpose other than that authorized by Stantec Architecture Inc. is forbidden.

Consultants

Legend

Notes

Revision	By	Appd.	Date

Issued	By	Appd.	Date

File Name:	DWN	CHKD	DSGN	DATE
	ME	LCB	DSP	3-9-01

STRUCTURAL DESIGN BY PI-TECH, INC.

GEORGIA REGISTERED PROFESSIONAL ENGINEER No. 24195 DANIEL S. PIPKINS

Client/Project
MULTI-MODAL TRANSPORTATION ADMINISTRATION BUILDING

DOUGLAS COUNTY, GEORGIA

DOUGLASVILLE, GEORGIA U.S.A.

Title
SECTIONS AND DETAILS

Project No.	Scale
DCO001.000	AS NOTED

Drawing No.	Sheet	Revision
S2.2	3 of 3	0

Stantec Architecture Inc.
4875 Riverside Drive
Macon, Georgia U.S.A.
31210-1117
Tel. 478.474.6100
Fax. 478.476.8373
www.stantec.com

HDR NOTES:
ALL WATER MAINS AND SANITARY SEWER CONSTRUCTION SHALL CONFORM TO DOUGLASVILLE-DOUGLAS COUNTY WSA STANDARDS AND SPECIFICATIONS, LATEST EDITION.

NOTIFY THE DOUGLASVILLE-DOUGLAS COUNTY WSA ENGINEERING DEPARTMENT AT LEAST 72 HOURS PRIOR TO BEGINNING OF CONSTRUCTION ON WATER AND SEWER. AN INSPECTOR WILL BE ASSIGNED AND A PRE-CONSTRUCTION MEETING SCHEDULED AT THIS TIME.

AS-BUILT DRAWINGS SHALL BE FIELD VERIFIED AND STAMPED BY A REGISTED ENGINEER OR LAND SURVEYOR.

ALL CONTRACTORS FOR WATER AND SEWER CONSTRUCTION SHALL BE ON THE DOUGLASVILLE-DOUGLAS COUNTY WSA APPROVED CONTRACTORS LIST. CONTACT THE WSA ENGINEERING DEPARTMENT FOR APPLICATIONS.

CONTRACTORS HAVE THE RESPONSIBILITY TO ENSURE EROSION CONTROL OF SEWER EASEMENTS, PARTICULARLY WHEN A SEWER EASEMENTS ARE IN CLOSE PROXIMITY OF DRAINAGE EASEMENTS. SEE THE ASSIGNED DOUGLASVILLE-DOUGLAS COUNTY WSA INSPECTOR FOR DETAILS.

Addendum No. 2
06/09/01

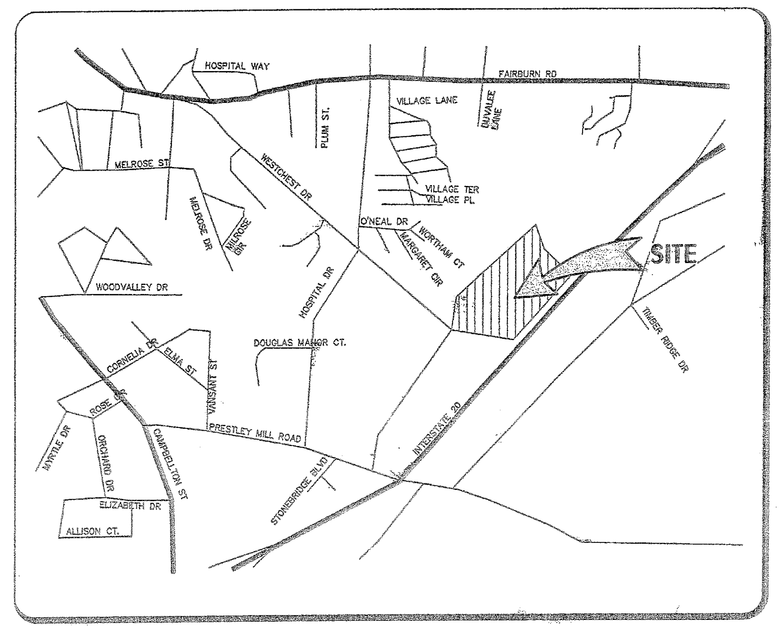

VICINITY MAP

Addendum No. 2
06/09/01

LAND LOTS 49, 50, 53, &54
FIRST DISTRICT, 5TH SECTION
CITY OF DOUGLASVILLE
DOUGLAS COUNTY, GEORGIA

ALL EROSION AND SEDIMENTATION CONTROLS AND TREE PROTECTION MEASURES SHALL BE INSTALLED PRIOR TO GRADING

OWNER
DOUGLAS COUNTY
BOARD OF COMMISSIONERS
8700 HOSPITAL DRIVE
DOUGLASVILLE, GEORGIA 30134
PHONE NO. 770-920-7243
CONTACT: MIKE McBRIER
ENGINEERING DIRECTOR

DOUGLAS COUNTY, GEORGIA

MULTI-MODAL TRANSPORTATION ADMINISTRATION BUILDING

APRIL 2001

Project Number: DCO001.000 (76400115)

LIST OF DRAWINGS

T1	TITLE SHEET
C2.0	GENERAL NOTES AND LEGEND
C3.0	EXISTING CONDITIONS PLAN
C4.0	DEMOLITION PLAN
C5.0	EROSION CONTROL PLAN, PHASE I
C6.0	SITE PLAN
C7.0	GRADING AND DRAINAGE PLAN
C8.0	EROSION CONTROL PLAN, PHASE II
C9.0	UTILITY PLAN
C10.0	TREE PROTECTION/REPLACEMENT PLAN
C11.0	STORM SEWER PROFILES
C11.1	STORM SEWER PROFILES
C11.2	STORM SEWER PROFILES
C11.3	STORM SEWER PROFILES
C11.4	SANITARY SEWER PROFILES
C12.0	EROSION CONTROL DETAILS
C13.0	CONSTRUCTION DETAILS
C13.1	CONSTRUCTION DETAILS
C13.2	CONSTRUCTION DETAILS
C13.3	CONSTRUCTION DETAILS
~~SL1.0~~	~~SITE LIGHTING PLAN~~
~~L1~~	~~IRRIGATION PLAN AND DETAILS~~
~~L2~~	~~IRRIGATION SLEEVING~~
S1.1	FOUNDATION AND FLOOR SLAB PLAN
S2.1	STORAGE FLOOR AND ROOF FRAMING PLAN
S2.2	SECTIONS AND DETAILS
A1.1	ARCHITECTURAL SITE PLAN
A2.1	FLOOR PLANS
A2.2	REFLECTED CEILING & ARCHITECTURAL FIRE PROTECTION PLANS
A2.3	FLOOR PLAN - FLOORING TYPE LAYOUT
A3.1	SCHEDULES AND DOOR/WINDOW TYPES
A3.2	DOOR AND WINDOW DETAILS
A4.1	EXTERIOR ELEVATIONS
A5.1	BUILDING SECTIONS
A5.2	WALL SECTIONS
A5.3	WALL SECTIONS AND FASCIA DETAILS
A5.4	WALL SECTION - ENTRY VESTIBULE 102
A5.5	WALL SECTION - DRIVE THRU 123
A6.1	LS PLANS AND ELEVATIONS
A6.2	LS PLANS AND ELEVATIONS
A6.3	LS PLANS AND ELEVATIONS
A6.4	MILLWORK DETAILS
A6.5	MILLWORK DETAILS
A7.1	DUMPSTER PLAN AND DETAILS
P1.1	PLUMBING DETAILS, LEGEND, SCHEDULES AND RISERS
P2.1	PLUMBING FLOOR PLANS
M1.1	MECHANICAL DETAILS, LEGEND AND SCHEDULES
M2.1	MECHANICAL FLOOR PLAN, PARTIAL EXHAUST PLAN AND ATTIC PLAN
E0.1	ELECTRICAL LEGENDS, SCHEDULES AND DETAILS
E1.1	ELECTRICAL SITE PLAN
E2.1	FLOOR PLAN - LIGHTING FLOOR PLAN - POWER AND SYSTEMS
E3.1	FLOOR PLAN - FIRE ALARM FLOOR PLAN - SECURITY SYSTEMS

Addendum No. 2
06/09/01

CONSULTING ENGINEERS

CIVIL ENGINEERS
HDR/WLJordan
200 N. Cobb Parkway, Building 100, Suite 134
Marietta, GA 30062
Phone: (678) 784-4000 Fax: (678) 784-4040

MECHANICAL ENGINEERS
Denning Engineering, LLC
151 Ostgian Blvd., Suite 155
Warner Robins, GA 31088
Phone: (478) 971-2656 Fax: (478) 971-2658

STRUCTURAL ENGINEERS
Pi-Tech, Inc.
P.O. Box 6631
Macon, GA 31208-6631
Phone: (478) 743-5600 Fax: (478) 742-1827

ELECTRICAL ENGINEERS
Electrical Design Consultants, Inc.
2723 Sheraton Drive, Bldg. E, Suite 145
Macon, GA 31204
Phone: (478) 743-8008 Fax: (478) 743-8020