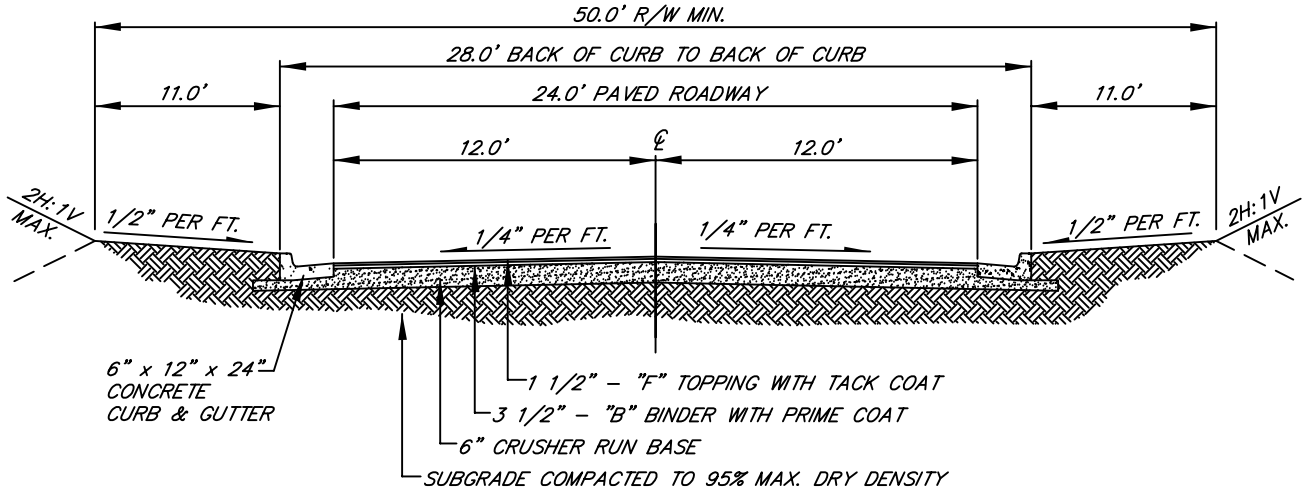

TYP. SECTION CURBED LOCAL STREET

DC–STD No. 1.01 N.T.S.

	Douglas County Engineering Department		
	1/04/01		DC–STD No. 1.01

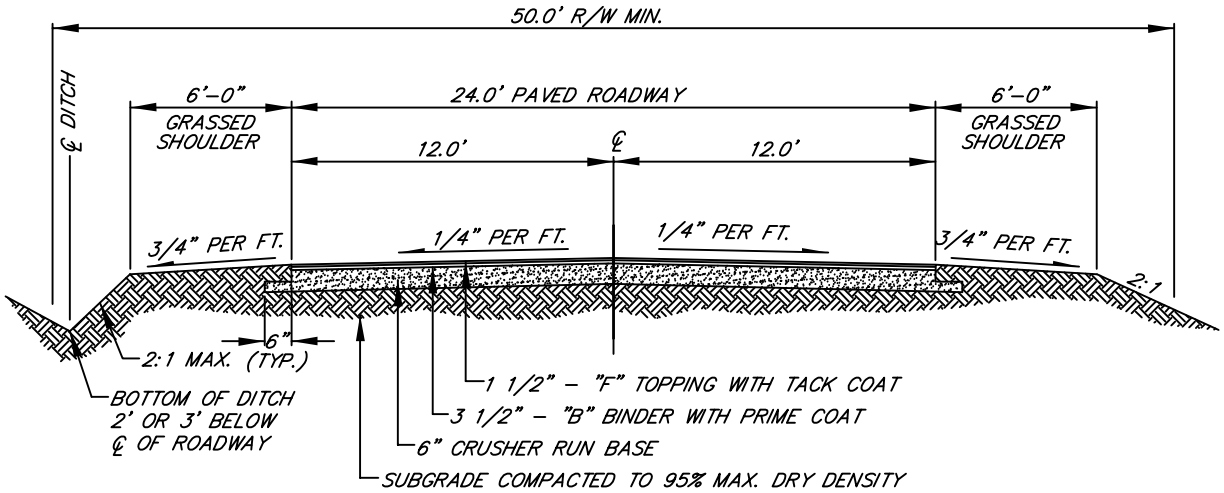

TYP. SECTION UNCURBED LOCAL STREET

DC-STD No. 1.02 N.T.S.

	Douglas County Engineering Department		
	4/04/16	UPDATED BY CTM	DC-STD No. 1.02

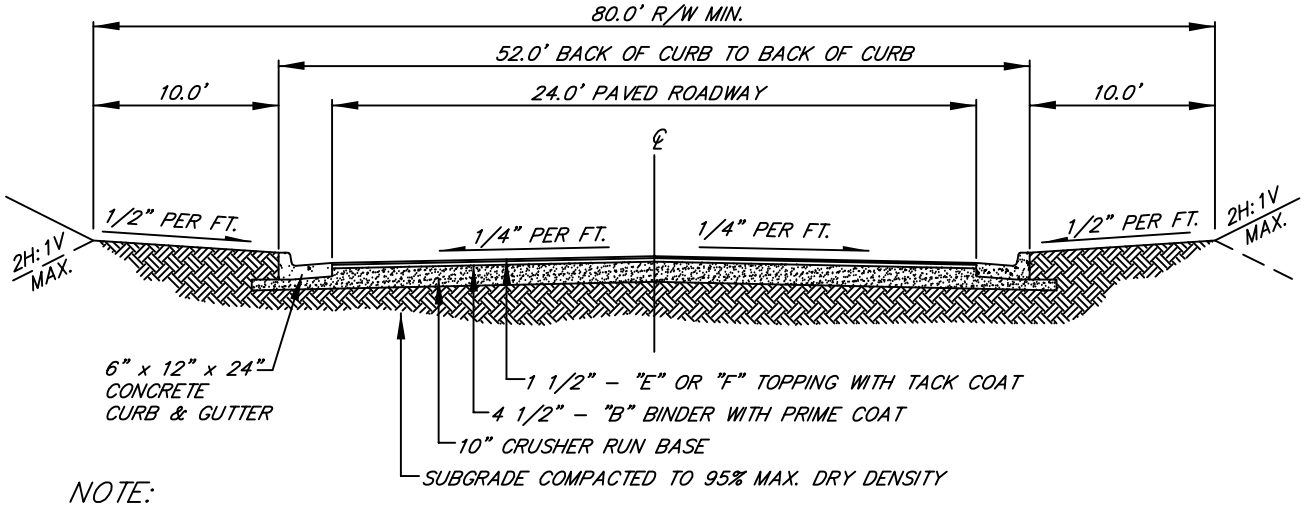

NOTE:
COMMERCIAL PAVING WIDTH FOR 4-LANE STREET WITH TURN LANE = 64'.
COMMERCIAL PAVING WIDTH FOR 2-LANE STREET WITH TURN LANE – 40'.

TYP. SECTION CURBED COMMERCIAL STREET

DC-STD No. 1.03 N.T.S.

Douglas County Engineering Department		
4/04/16	UPDATED BY CTM	DC-STD No. 1.03

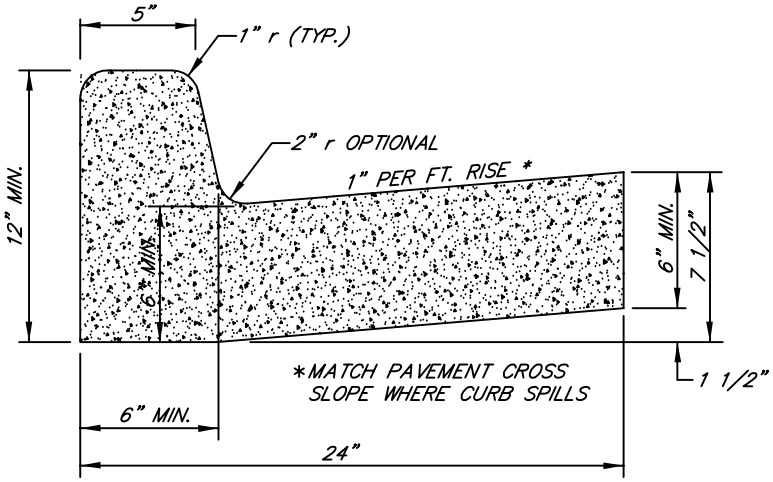

NOTE:

1. 1/2" PREFORMED EXPANSION JOINTS REQUIRED AT ALL STRUCTURES AND CURB RETURNS.
2. MAXIMUM OF 400' DISTANCE BETWEEN EXPANSION JOINTS
3. 10' DISTANCE BETWEEN DUMMY JOINTS.
4. CONCRETE STRENGTH = 3000 P.S.I., SLUMP = 2", FINISH SHALL BE SMOOTH AND EVENED WITH A WOODEN FLOAT.
5. 6" OF CRUSHER RUN BASE TO BE PLACED UNDER CONCRETE CURB AND GUTTER. SUBGRADE TO BE COMPACTED TO 95% MAX DRY DENSITY.

CONCRETE CURB AND GUTTER

DC-STD No. 1.04 N.T.S.

Douglas County Engineering Department		
4/04/16	UPDATED BY CTM	DC-STD No. 1.04

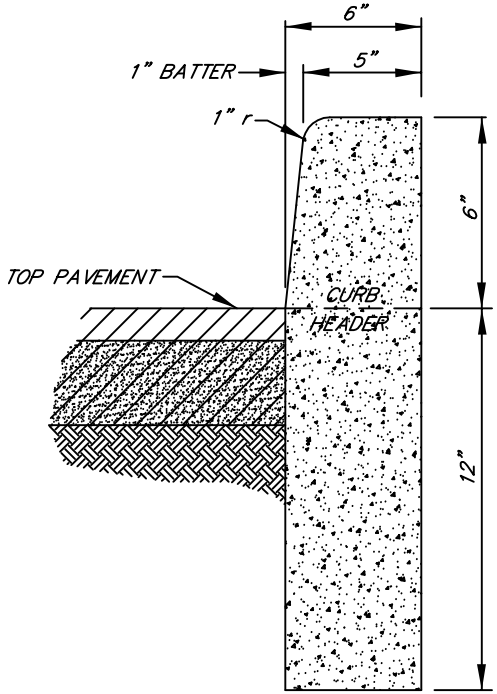

CONCRETE HEADER CURB

DC–STD No. 1.05 N.T.S.

Douglas County Engineering Department		
1/04/01		DC–STD No. 1.05

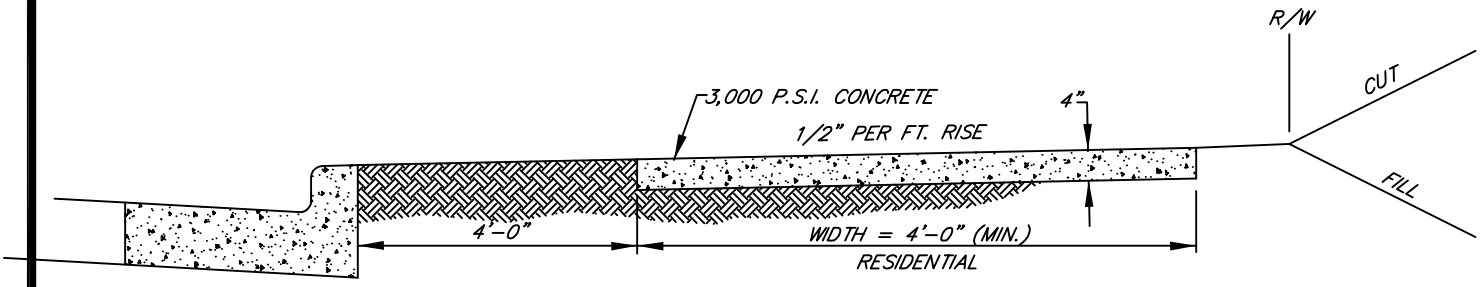

TYPICAL SECTION OF SIDEWALK

N.T.S.

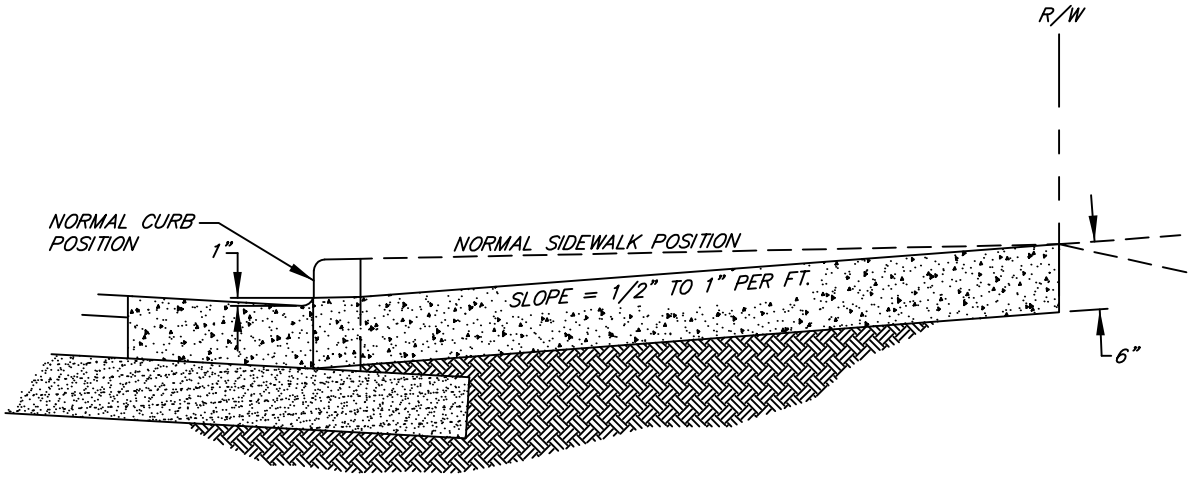

SIDEWALK SECTION AT DRIVEWAY

N.T.S.

NOTE:

1. CONCRETE TO BE PLACED 4" THICK AND FINISHED WITH TAMPS, WOOD FLOATS AND STIFF-BRISTLE BROOMS.
2. TRANSVERSE CONTRACTION JOINTS SHALL BE PLACED AT 10 FT. INTERVALS. NO CONTRACTION JOINT TO BE PLACED IN SIDEWALKS IN DRIVEWAYS. ALL EDGES TO BE ROUNDED TO 1/4" RADIUS.
3. 1/2" EXPANSION JOINTS SHALL BE PLACED WHERE SIDEWALKS TIE INTO A STRUCTURE OR TERMINATE AT CURB, RAMPS OR DRIVEWAYS OR A MAXIMUM OF 150 FEET APART.

TYPICAL SIDEWALK DETAILS

DC-STD No. 1.06 N.T.S.

Douglas County Engineering Department		
4/04/16	UPDATED BY CTM	DC-STD No. 1.06

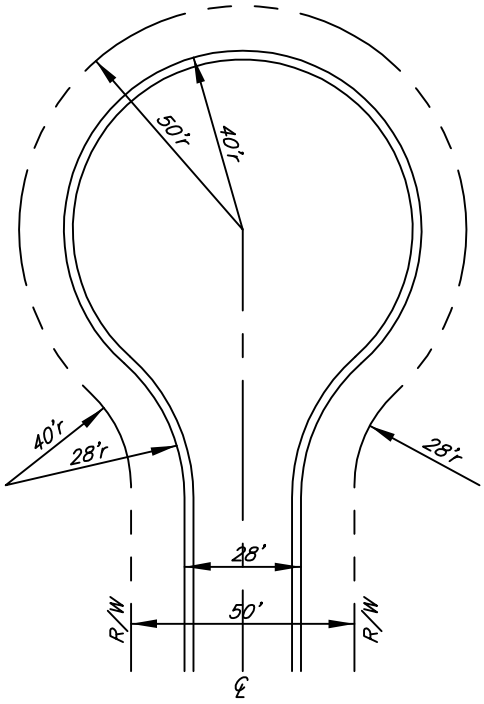

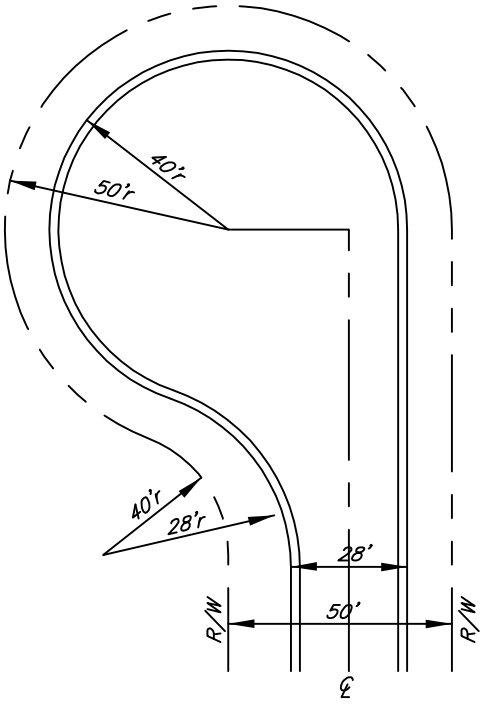

OFFSET (LEFT OR RIGHT)

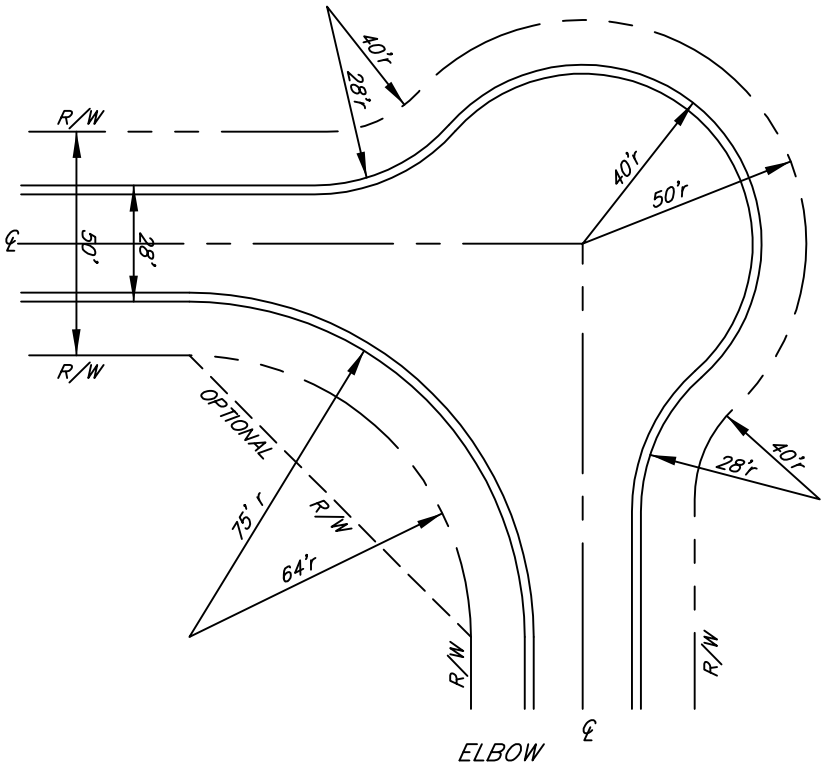

ELBOW

CUL–DE–SAC RESIDENTIAL

DC–STD No. 1.13 N.T.S.

Douglas County Engineering Department		
3/01/01	UPDATED BY JMW	DC–STD No. 1.13

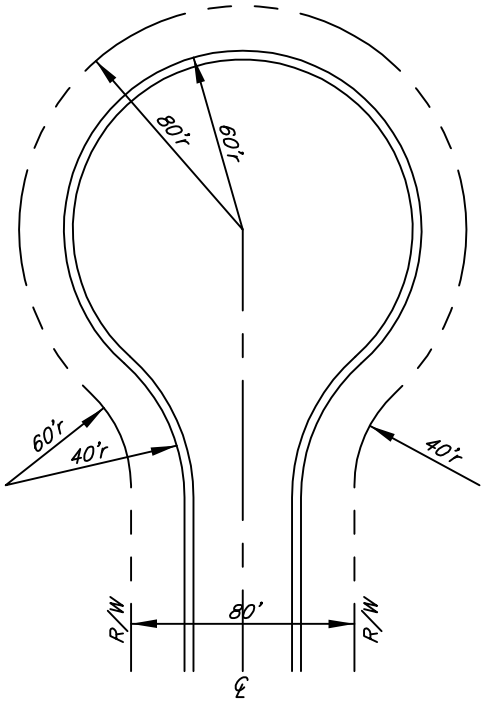

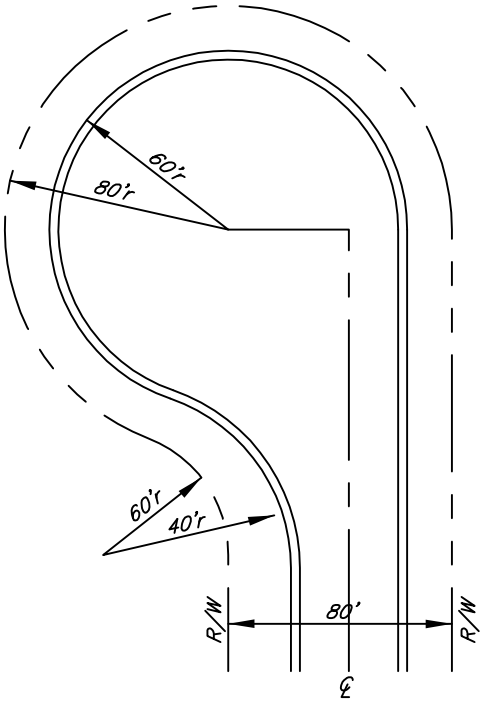

OFFSET (LEFT OR RIGHT)

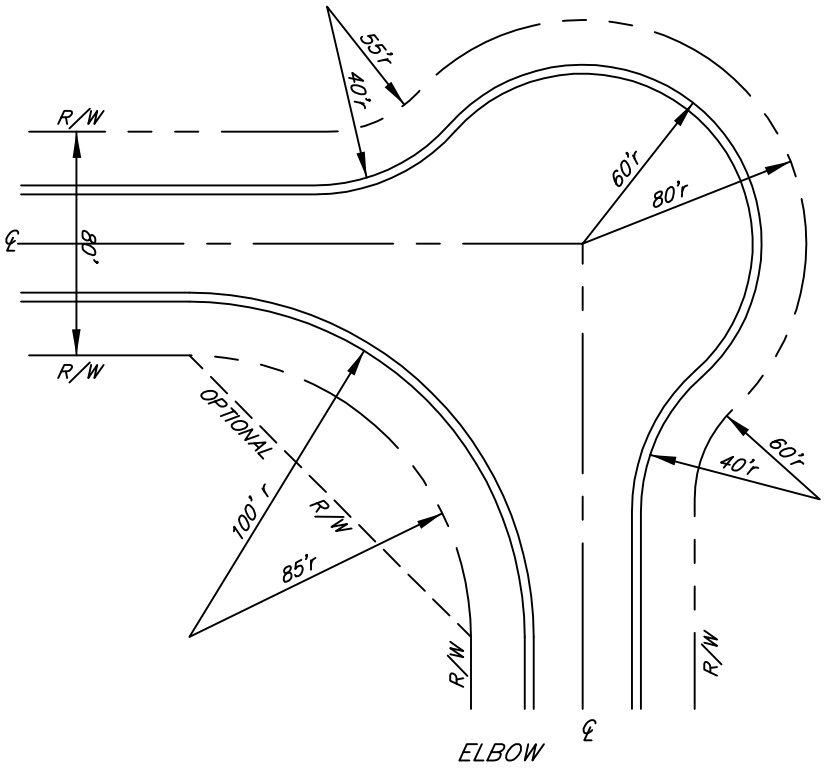

ELBOW

TYPICAL COMMERCIAL OR INDUSTRIAL CUL-DE-SAC

DC-STD No. 1.14 N.T.S.

Douglas County Engineering Department		
1/04/01		DC-STD No. 1.14

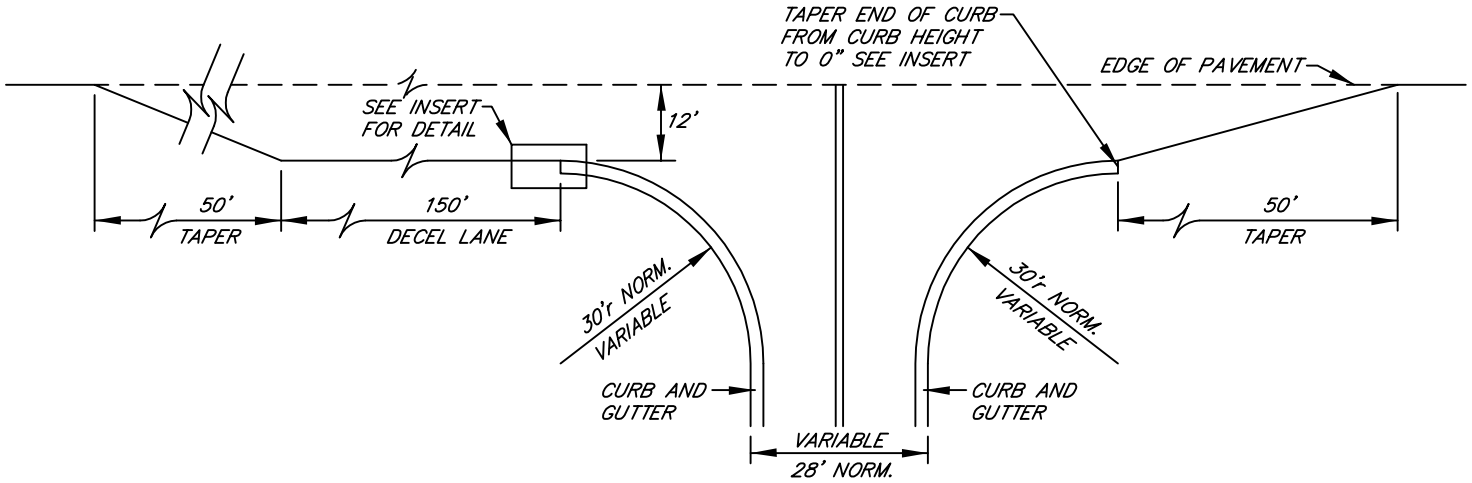

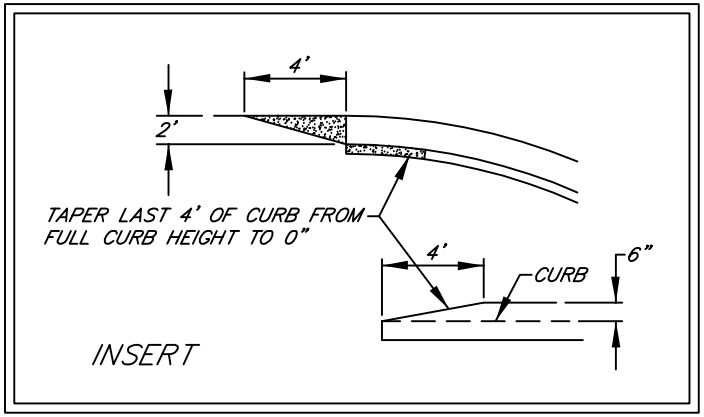

NOTE:
CURB AND GUTTER WILL BE USED ON THE ENTIRE RADIUS IF THE INTERIOR DEVELOPMENT HAS CURB AND GUTTER AND WILL BE REQUIRED ON THE DECEL LANE IF THE SITE IS LOCATED IN A CURB AND GUTTER SECTION OF ROADWAY.

TYPICAL COMMERCIAL OR INDUSTRIAL DRIVEWAY OR SUBDIVISION ENTRANCE

DC–STD No. 1.15 N.T.S.

Douglas County Engineering Department		
1/04/01		DC–STD No. 1.15

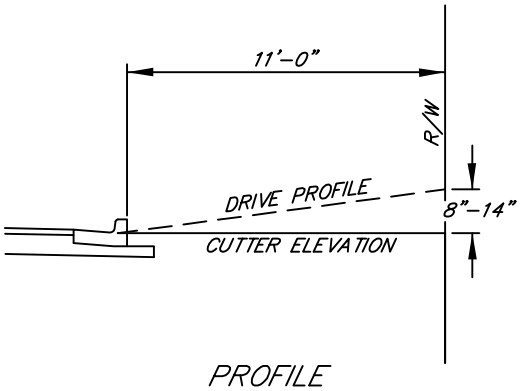

PROFILE

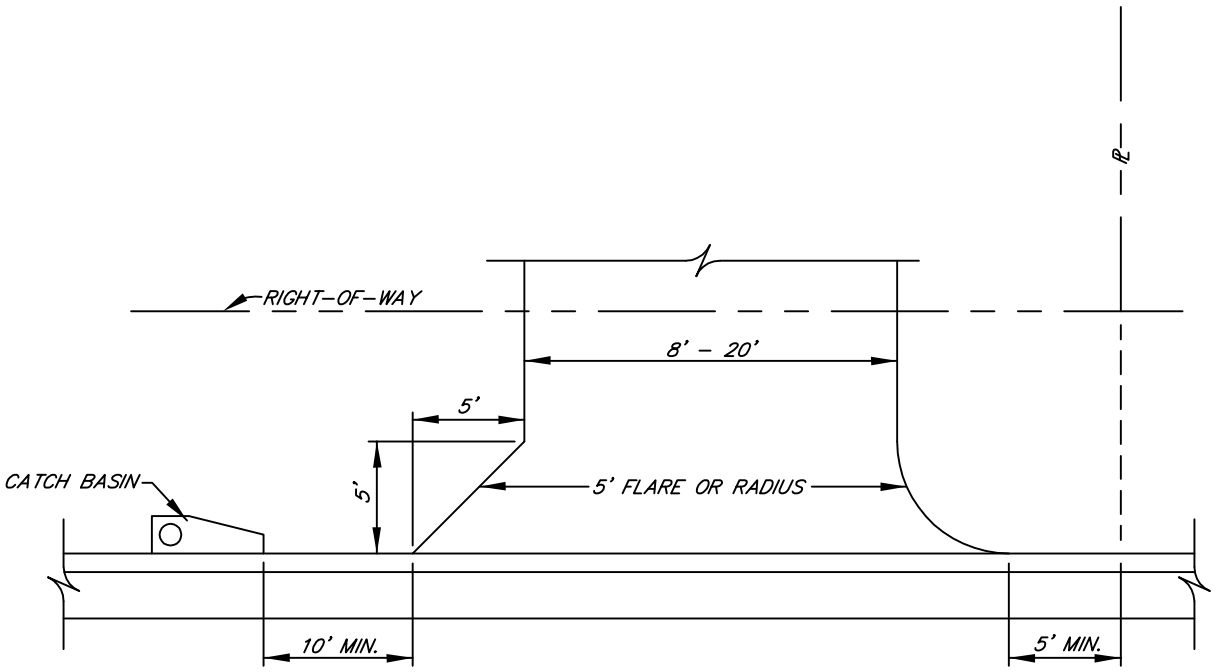

TYPICAL RESIDENTIAL DRIVEWAY

DC-STD No. 1.16 N.T.S.

Douglas County Engineering Department		
1/04/01		DC-STD No. 1.16

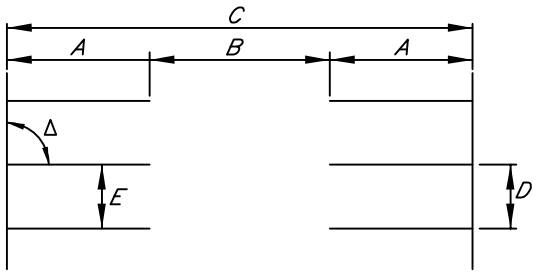

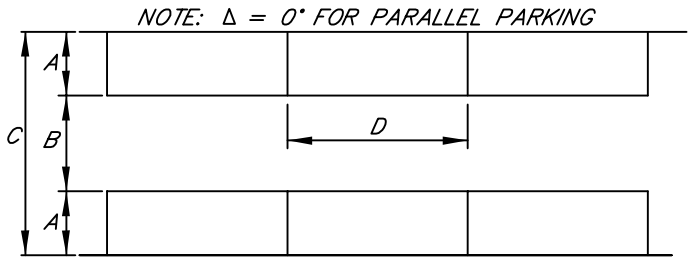

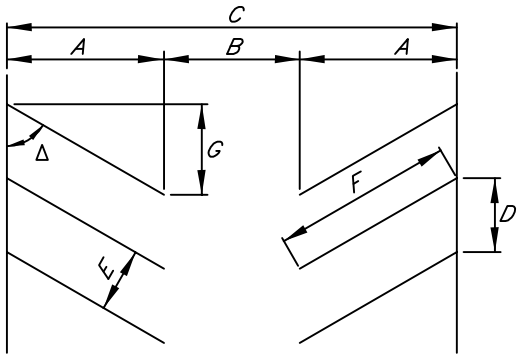

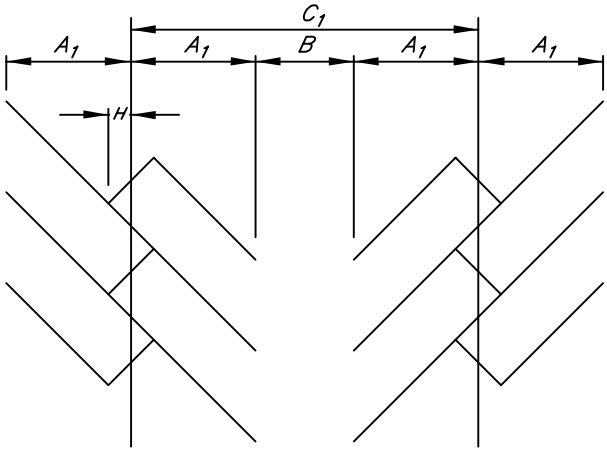

Δ	A	B	A+B	C	D	E	F	G	H	A_1	C_1
ANGLE OF PARKING	DEPTH OF STALL	AISLE WIDTH	--	WIDTH OF BAY	CURB LENGTH	WIDTH OF STALL	LENGTH OF STRIPE	WASTE SPACE	DEPTH OF OVERHANG	DEPTH OF STALL	WIDTH OF AREA
0°	9.0'	24.0' *4	21.0'	30.0'	24.0'	--	--	--	--	--	--
30°	18.0'	11.0'	29.0'	47.0'	18.0'	9.0'	36.0'	31.2'	3.9'	14.1'	39.2'
45°	20.5' *1	13.0'	33.5'	54.0'	12.7'	9.0'	29.0'	20.5'	3.2'	17.3'	47.6'
60°	22.0' *2	18.0'	40.0'	62.0'	10.4'	9.0'	25.4'	12.7'	2.25'	19.75'	57.5'
90°	20.0' *3	24.0' *5	44.0'	64.0'	9.0'	9.0'	20.0'	--	--	--	--

*1 – DEPTH OF STALL FOR 45° PARKING CAN BE REDUCED TO 19' IF 1.5' OF OVERHANG OVER CURB IS PROVIDED.
*2 – DEPTH OF STALL FOR 60° PARKING CAN BE REDUCED TO 20' IF 2' OF OVERHANG OVER CURB IS PROVIDED.
*3 – DEPTH OF STALL FOR 90° PARKING CAN BE REDUCED TO 18' IF 2' OF OVERHANG OVER CURB IS PROVIDED.
*4 – MINIMUM AISLE WIDTH FOR 0° PARKING IS 11' FOR ONE-WAY TRAFFIC
*5 – MINIMUM AISLE WIDTH FOR 90° PARKING IS 22' FOR ONE-WAY TRAFFIC.

STANDARD OFFSTREET PARKING DETAIL

DC-STD No. 1.18 N.T.S.

Douglas County Engineering Department

4/04/16	UPDATED BY CTM	DC-STD No. 1.18

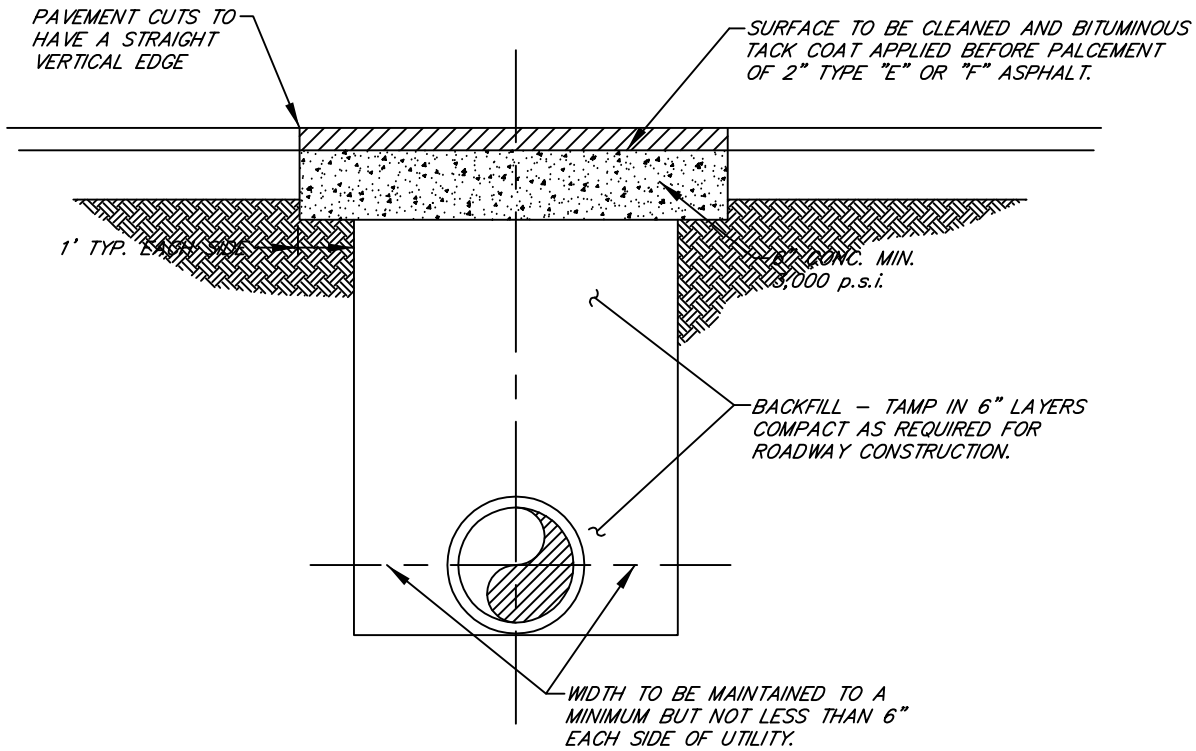

NOTE:
TEMPORARY 6" GRAVEL WITH STRUCTURAL STEEL PLATE SHALL BE USED WHEN WEATRER DOES NOT PERMIT PAVING OR CONCRETE PLACEMENT.

STANDARD PAVEMENT REPAIR

DC–STD No. 3.01 N.T.S.

Douglas County Engineering Department		
		DC–STD No. 3.01

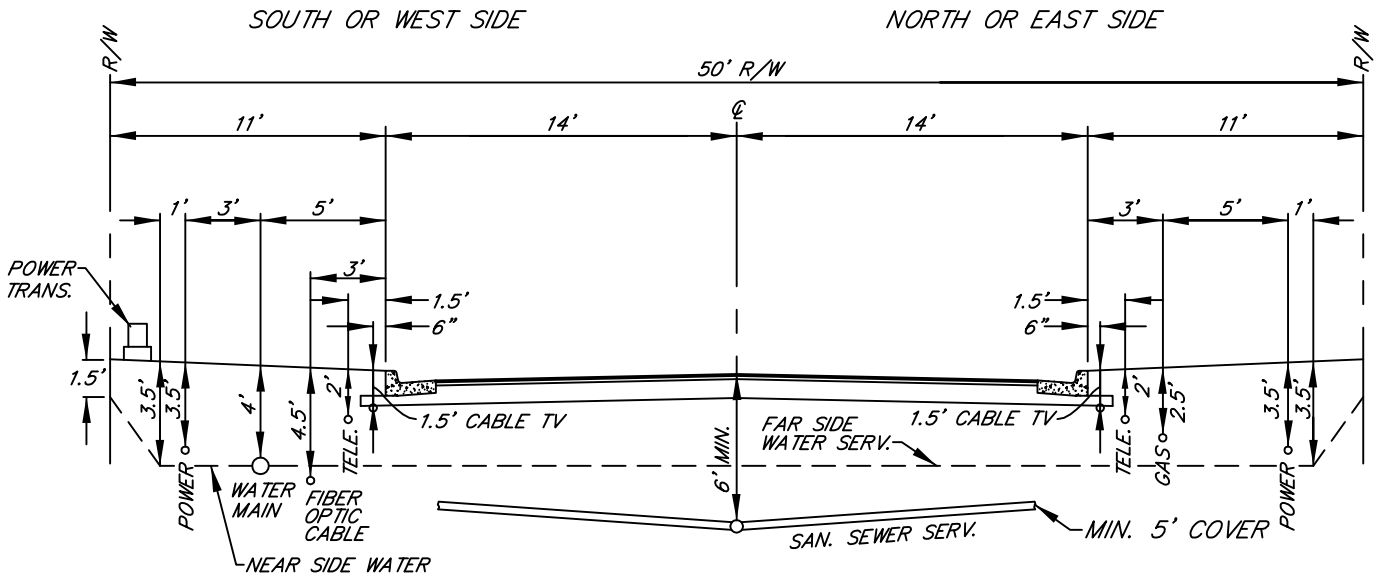

NOTES:

1. ON ALL UNCURBED STREETS UTILITY LOCATIONS SHALL BE THE SAME DISTANCES FROM CENTERLINE AS SHOWN ABOVE.

2. POLES FOR OVERHEAD UTILITIES TO BE LOCATED WITH CENTER OF POLE A MIN. OF TWENTY FEET (20') FROM CENTERLINE OF STREET (TYPICAL FOR CURBED & UNCURBED STREETS).

TYPICAL UTILITY LOCATION

DC-STD No. 3.02 N.T.S.

Douglas County Engineering Department	
	DC-STD No. 3.02