Douglas County

Department of Transportation

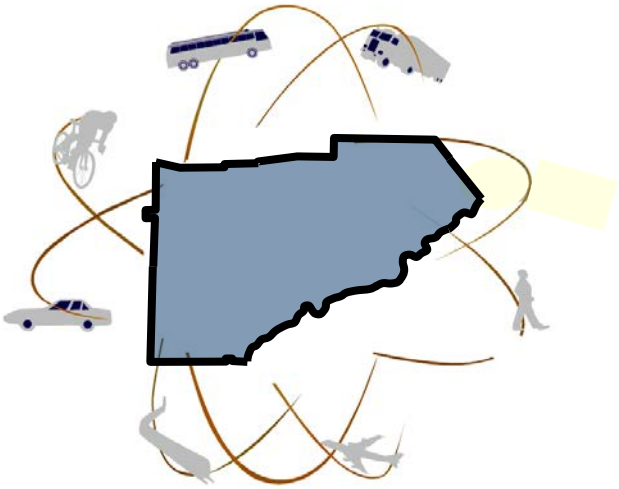

2006

TRAFFIC SIGNAL SPECIFICATIONS

Revision 14

October 2015 to current

Table of Contents

GENERAL PROVISIONS

Group 1	2070L Controller/Master	(Section 1)
	2070L Equipment	(Section 1)
	332A Cabinet	(Section 1)
	School Flasher Cabinet	(Section 1)
	2010EClip Conflict Monitor	(Section 1) Subsection (13)
	Uninterruptible Power System	(Section 2)
	Battery Backup System	(Section 3)
Group 2	Vehicle Detectors	(Section 1)
Group 3	Signal Heads/ Pedestrian Signal Heads	(Section 1)
	Video Detection	(Section 2)
	LED (ball) Signal Indications	(Section 3)
	LED (arrow) Signal Indications	(Section 4)
	LED Pedestrian Signal Indications	(Section 5)
	CCTV	(Section 6)
	LED Signage	(Section 7)
	LED Luminaires	(Section 8)
	Meterbases and wiring requirements	(Section 9)
Group 4	Loop Sealant	(Section 1)
Group 5	Universal Span Wire Clamp/ Bullring	(Section 1)
	Pedestrian Signal Hardware	(Section 2)
	Pedestrian Push Button Station Assemblies	(Section 3)
	Pedestrian Push Buttons	(Section 4)
	Pedestrian Double Pushbutton Station Adapter	(Section 5)
	Pedestrian Pole Signage	(Section 6)
	Astro-Brac	(Section 7)
	Pedestrian Clamshell	(Section 8)
	Pedestrian Pole/Base	(Section 9)
	Fiber Optic Closure	(Section 10)
	Strand Vise and Stand Link	(Section 11
	Forged Eye Bolts	(Section 12)
	Steel Strain Poles/ Mast Arm Poles	(Section 13)
	Construction Diagrams for Ped Equipment	(Section 14)
	Couplings to connect HDPE and PVC conduit	(Section 15)
	Mast Arm Sign Mounting Equipment	(Section 16)
	Spanwire Sign Mounting Equipment	(Section 17)
Group 6	Cables and Wires	(Section 1)
	Meterbase	(Section 2)

Group 7	Internal Modems	(Section 1)
	External Modems	(Section 2)
	External Faxmodem	(Section 3)
Group 8	Priority Control	(Section 1)
Group 9	Non-invasive Magneto-inductive Vehicle Sensor	(Section 1)
Group 10	Pullbox	(Section 1)
	Pullbox Lid	(Section 2)
Group 11	Traffic Signal Cabinet Base	

GENERAL PROVISIONS FOR SUPPLYING TRAFFIC CONTROL EQUIPMENT

I. **Purpose -** The purpose of this specification is to set forth the requirements and terms for supplying Douglas County, Georgia the traffic control equipment described in the following sections. All equipment and signal installations shall conform to the Georgia Department of Transportation specifications unless otherwise noted in these specifications. Where differences occur, this specification shall take precedence.

NOTE: All general provisions contained within these specifications shall apply to all groups and sections

II. **Description –** These specifications define the minimum acceptable design and operational standards for traffic control equipment. All traffic signal controllers and masters shall be fully capable of running SEPAC software with full monitoring from the central computer running ACTRA Software. All 2070L controllers shall conform to the Georgia Department of Transportation and CALTRANS Specifications (Caltrans November 19, 1999 or latest Transportation Electrical Equipment Specifications). Where differences occur, the Georgia Department of Transportations specifications shall prevail unless otherwise noted in these specifications. The Conflict Monitor shall be fully capable of being monitored by the ACTRA software so that the software from the central computer can be run through the controller connection in the field to the conflict monitor.

III. **Documentation -** Documentation packages shall be delivered and available to be downloaded from the Internet at the same time as the equipment to which it pertains. Also, there shall be one complete documentation package furnished with each traffic control equipment package ordered.

A. **Parts Identifications –** The documentation package shall contain a method of parts identification that shows the location of every individual component. This includes integrated circuits, transistors, resistors, capacitors, and inductors as well as test points, switches and indicators. Parts identification shall be imprinted, stamped or etched on circuit boards in addition to providing a pictorial layout. Such markings shall not be obscured from normal viewing as a result of parts mounting and shall be referenced to the schematic.

B. **Parts Replacement/Repair –** The documentation package shall contain a part replacement guide so that any component needing replacement can be identified. It shall be possible to use the parts replacement guide for information to either find an industry standard replacement part or order a needed component from the manufacturer. All components that are not standard components readily available from commercial

electronics supply outlets shall be identified in the documentation package. The documentation package shall contain a repair price list.

C. **Schematics –** The documentation packages shall include a schematic of each component and printed circuit board to include identification of all parts and terminals. Data on all internal circuitry of at least a schematic symbol, a truth table, and identification of pin settings and their functions.

D. **Installation Procedures –** The documentation packages shall include complete electrical and mechanical installation procedures for each type of unit. Procedures shall be precise and easy to understand.

E. **Maintenance Procedures –** Maintenance and trouble-shooting procedures shall be included and referenced to the schematics so block checks can be made to locate any defective components. Point to point voltages shall be included that are pertinent to proper servicing. Test points must be easy to locate and contact with test instrument probes.

F. **Equipment Descriptions –** A complete physical description of each unit shall be provided to include dimensions, weight, temperature rating, voltage requirements, power requirements, material composition, and complete performance specifications.

G. **Operation Guides and Users Manuals –** One complete set of user manuals shall be provided with each piece of equipment ordered. These documents shall include all setup configurations and programming procedures for the equipment.

H. **Cables and Connectors –** All cables, connectors, and special cables shall be provided with each piece of equipment and peripheral equipment.

IV. **Statement of Qualifications –** A documentation package shall accompany the equipment submitted for acceptance testing. The prospective bidder shall attach a letter of compliance to their documentation package stating that their equipment meets all requirements of these specifications. Douglas County reserves the right to disqualify any equipment containing exceptions to specifications contained herein. The manufacturer shall retain copies of all drawings to be reproduced upon request of the County. The County may require equipment demonstrations at Douglas County, the manufacturer's factory, or actual installation locations. **All bidders must submit a specification sheet for each item that a bid is submitted.**

A. **Bid Rejections –** Douglas County reserves the right to reject bids on an individual model without affecting the bid on other models.

B. **Bid Evaluation –** After all bids have been received, they will be reviewed for conformance to this specification. Douglas County may request delivery of any bid item for inspection prior to award of contract. An evaluation will be made to determine what, if any components, printed circuit boards, or other replacement parts, are interchangeable with similar components of the solid state controllers currently owned by the County. When equipment is to be purchased for an intersection that is within a current traffic control system, the ability of the proposed equipment to communicate with the existing system will be considered in the award decision. Bids shall be evaluated on the total cost of the estimated quantities of all bid items. **Douglas County reserves the right to purchase any equipment from another vendor to maintain equipment and software compatibility within signal systems or for any other reason the County deems necessary.**

C. **Award of Contract –** Douglas County reserves the right to award a contract to more than one bidder, and may purchase from whichever bidder meets the County's need for a particular project. Award of contract will supersede any previous contracts for same equipment previously held by Douglas County, exclusive of warranty requirements.

D. **Contract Duration –** Bid prices shall be good for a period of one year from award of contract. Douglas County shall have the right to increase or decrease the number of each bid item without changing the unit bid price within the one-year period. The contract shall be renewable on a yearly basis, not to exceed (3) years, if mutually agreed upon in writing between Douglas County and the bidder.

E. **Termination of Contract –** Douglas County reserves the right to cancel portions of this contract upon a 30 day written notice at any time during the contract if any equipment furnished under these specifications is found to be in violation of any requirements of this specification, including inadequate servicing of equipment and software. **Douglas County also reserves the right to cancel portions of this contract and purchase from the next lowest bidder in the event of excessive equipment problems or malfunctions, excessive software problems, and failure to respond to requests for technical information and assistance within 24 hours (excluding holidays and week ends). It will be at Douglas County's sole discretion to determine the quantity of equipment and software problems that are deemed to be excessive.**

F. **Contact Person –** Bidder must provide the name and phone number(s) of a person to act as a single point-of-contact for all equipment and software problems. (See section 1.8 for further requirements).

G. **Changes to Specifications –** Douglas County may make changes to these specifications that would improve the specifications by reducing cost or provide a better product. Changes to the specifications would require full consent of the successful bidder.

V. WARRANTY

A. **Warranty Requirements -** The warranty shall include only failures, which occur as a result of normal operation of the equipment. The warranty shall not include damage due to lightning, fire, and high winds, moving objects, acts of vandalism or sabotage or acts of God. The bidder shall bear all costs of repair or replacement in addition to return shipment of any unit, portion of a unit, or component associated with the equipment, which may fail because of normally occurring electrical or mechanical problems.

B. **Duration –** Warranty shall be effective for an operation period, minimum of two years (24 months) unless a longer warranty is specified in other parts of this specification. If bidder is furnishing equipment that carries a manufacturer's warranty greater than two years, the manufacturer's warranty shall supersede Douglas County's warranty requirement. Units, which have been found to be defective by Douglas County, will be removed from service and returned to the bidder at no charge to Douglas County. The bidder shall have 30 days after receipt of defective equipment to either repair or replace it, upon which date the equipment shall be returned to Douglas County. A minimum of 120 operation hours shall be required on each repaired or replaced item before it is returned. The bidder shall notify Douglas County as soon as the repair item is return shipped. Should the bidder elect to repair or replace any equipment on site in Douglas County, he shall have 30 days after receipt of notification to completely restore equipment to proper operation. The warranty period shall commence at the date of delivery to Douglas County and extend for two years (24 months) in an operating environment.

C. **Documentation –** All warranty documentation shall be submitted with equipment at time of delivery.

VI. DELIVERY AND ACCEPTANCE

A. **Delivery Requirements –** All equipment shall be delivered prepaid, with shipping and handling charges included in the bid price, to Douglas County Board of Commissioners, Department of Transportation, 8700 Hospital Drive, Douglasville, Georgia 30134. All packages and materials shall be identified with the Douglas County purchase order number. Sealed packing lists must be affixed with each showing its content.

B. **Acceptance Requirements –** Upon arrival, the equipment shall be inspected. If said equipment is found to be in compliance with these specifications, final acceptance will be granted. If damaged equipment or areas of non-compliance are found, final acceptance will be withheld, payment will not be authorized, and the manufacturer shall have two (2) weeks (exclusive of shipping time) from the date of receipt of notification to repair or replace all equipment in order to secure compliance with these specifications. Upon acceptance by Douglas County, the supplier may invoice Douglas County for the equipment delivered with the invoice prices of each unit.

C. **Delivery Time –** The supplier shall deliver all cabinet and controller items ordered by Douglas County within **90 days of receipt of purchase order**.

D. **Late Penalty –** Douglas County may enforce a late delivery penalty for delinquent equipment shipments in an amount of **one percent (1%) per day** of the bid price.

VII. DEVIATIONS FROM SPECIFICATION REQUIREMENTS

A. **Bid Exceptions –** It is the intent of Douglas County that all traffic signal equipment and material shall conform to the requirements of these specifications. Douglas County may grant infrequent exceptions of the specifications in order to take advantage of "State-of-the-Art" equipment advances or other circumstances that are found to be in the public interest. All exceptions must be listed at the time of bid. Exceptions to these bid requirements not listed at bid opening time will result in disqualification of the bid. Douglas County reserves the right to reject any exceptions and conform to the equipment specifications defined herein.

VIII. CUSTOMER SERVICE

A. **Contact Person –** The bidder must furnish the name and phone number(s) of a customer service representative that will serve as a liaison for Douglas County to address all equipment and software problems. **It is the responsibility of this person to provide answers to all questions pertaining to the equipment being provided**. If the contact person cannot answer a particular question, it is their responsibility to obtain an answer from an appropriate source. If equipment needs to be repaired or replaced, the contact person is responsible for making arrangements for returns and deliveries. All correspondence shall be through the contact person, unless otherwise agreed upon by Douglas County.

B. **Response Time –** The contact person must respond within **one working day** of being contacted by Douglas County personnel. At this time, Douglas County must be notified of how the problem will be addressed and how long Douglas County should expect to wait for an answer.

C. **Alternate Contact –** When the primary contact person will be unavailable for more than 24 hours (vacations, illness, etc.), Douglas County must be furnished with the name and phone number of an alternate contact given all responsibilities of the primary contact.

D. **Technical Service –** The successful bidder shall employ a technical service representative available to respond to problems related to the equipment or software or to the needs of Douglas County related to the equipment or software. The technical service representative **shall respond to the on-site problem or need within 24 hours of notification**. Douglas County shall have the right to deem any non-responsiveness on the part of the technical service representative as failure to meet these specifications and at anytime during the one year period of this contract shall have the right to terminate the contract and make award to the next lowest bidder.

All signal materials shall conform to the Georgia Department of Transportation Specifications 2001 Edition or newer edition and the Douglas County Master Contract Section 3 <u>except as specified below</u>.
NOTE: Modem strings should be provided and guaranteed to work.

<u>GROUP 1</u>

<u>SECTION 1</u>

332A CABINET, 2070L CONTROLLER, AND FLASHER CABINET SPECIFICATIONS

I. Materials

A. Requirements

Ensure that the traffic signal equipment and materials meet the Plans and Specifications.

All equipment furnished shall be new and meet the requirements of the following:

- Underwriter's Laboratory Incorporated (UL)
- Electronic Industries Association (EIA)
- National Electric Code (NEC)
- American Society of Testing and Materials (ASTM)
- American National Standards Institute (ANSI)
- International Municipal Signal Association (IMSA)
- National Electrical Manufacturers Association (NEMA)
- Applicable Standards, Specifications, and Regulations of the:

  Georgia Department of Transportation
  Traffic Signal Electrical Facility & NaviGAtor Support (TSEF)
  935 E. Confederate Avenue, Building 5
  Atlanta, GA 30316

B. Fabrication - General Provisions 101 through 150.

C. Acceptance - General Provisions 101 through 150.

D. Materials Warranty

- Provide all manufacturers' warranties and guarantees for all signal equipment items listed in this document as well as any signal equipment listed in the plans, except for state supplied equipment.
- Ensure that warranties and guarantees are consistent with those provided as customary trade practices; or as otherwise specified in the plans, Standard Specifications, Supplemental Specifications or Special Provisions.
- Ensure that manufacturer's and supplier's warranties and guarantees are transferable to the agency or user that is responsible for traffic signal maintenance, are continuous throughout their duration and state that they are subject to such transfer.
- Ensure equipment provided under this specification shall be warranted by the manufacturer to be free from defects in materials and workmanship for a period of two years from date of receipt or one year from date of acceptance of installation.
- Ensure the manufacturer will repair any faulty equipment during this period at no charge to the Department for parts, labor or shipping to and from the factory.

II. Type 2070L Controller Assemblies

A. Requirements

For 2070L controller cabinet assemblies, use 2070L controller units that meet the requirements of the following or are previously approved by TSEF:

☐ *Traffic Electrical Equipment Specifications (TEES)* published by the State of California Business, Transportation, and Housing Agency; Department of Transportation, current edition and current addenda

☐ *CALTRANS* Qualified Products List (QPL)

- Ensure the unit supplied is compatible with current GDOT licensed firmware.
- **Ensure each 2070L controller is shipped with the current GDOT licensed SEPAC/SEMARC intersection software installed, operational, and most current valid version.**

Provide a blank Data Key that can be programmed for a 2070 Controller. Supply 2070 Data Key that:

1. Is a SFK2MB as manufactured by DataKey Part #611-0105-000 or equivalent.
2. Has a contact Life of 15,000 Insertion / removal Cycles.
3. Has a Key head Shear Limit of 15 pounds.
4. Has a Key Twist Torque Limit of 15 inch-pounds.
5. Has Active Power of 25 milliwatts typical and standby power of 550 microwatts typical.
6. Use 5.0 volts for operation and programming.
7. Has a storage and operating temperature range of -40 C to +85 C.
8. Has a capacity of 2Mb of flash memory (2048Kb) 256x4.
9. Has Unlimited Read cycles and 1,000,000 write cycles minimum.

10. Has Data Life of 20 years minimum.
11. Meets the Caltrans Transportation Electrical Equipment Specifications (TEES) latest version including Erratum for Section 9.2.6.

The following specifications augment the CALTRANS specifications and take precedence over conflicting CALTRANS Specifications.

1. Input/output (I/O) and Configuration:

The 2070L Controller shall be supplied in the following configuration:

2070L: Provide Chassis, 2070-1B Single-Board CPU, 2070-2A Field I/O Module, 2070-3B Front Panel (8x40 display), 2070-4A 3.5-amp Power Supply, and a 2070-7A Module. This unit shall provide the default input and output configuration as shown in Tables 925 -6, 925-8 and 925-9 for ITS cabinets.

2. Power Supply Modules:

The 2070-4A module shall be provided as required in the configuration requirements in the preceding Item. In addition to all requirements of the TEES, the power supplies shall be clearly marked as a "2070-4A".

3. Documentation:

Include with each controller, manuals that document the programming, operation, and maintenance of the unit. Include schematic drawings and pin assignment charts in the manuals for maintenance. Documentation shall include all components, including communications modules.

4. Testing:

Provide for complete testing of unit before it is shipped. If unit is shipped with applications software installed. It must be tested with the application (e.g. Traffic Signal Control). If random samples of greater than 10 percent of the units tested are rejected then the total shipment shall be rejected and vendor will be responsible for all costs to test and repair all units provided.

B. Fabrication

General Provisions 101 through 150.

C. Acceptance

(See Subsection 925.2.01 for compliance with CALTRANS QPL also see 4. Testing in Section A above.).

D. Materials Warranty:

(See Subsection 925.2.D for Materials Warranties).

925.2.02 Type 2070L Controller Subassemblies

A. Requirements

For 2070L controller subassemblies, use 2070L controller subassembly units that meet the requirements of the following or are previously approved by TSEF:

☐ *Traffic Electrical Equipment Specifications (TEES)* published by the State of California Business, Transportation, and Housing Agency; Department of Transportation, current edition and current addenda

☐ *CALTRANS* Qualified Products List (QPL)

The following specifications augment the CALTRANS specifications and take precedence over conflicting CALTRANS Specifications.

1. 2070 1B Module:

The 2070 1B module may be supplied as a separate item to be used in all versions of the 2070 controller. The 2070 1B module shall be supplied complete with the operating software. Ensure it contains the required files to be compatible with the current GDOT applications software.

2. 2070 2A Field I/O Module

The 2070 2A Field I/O module may be supplied as a separate item. The 2070 2A Field I/O module shall consist of the Field Controller Unit; Parallel Input/Output Ports; other Module Circuit Functions (includes muzzle jumper); Serial Communication Circuitry; Module Connectors C1S, C11S and C12S mounted on the module front plate; VDC Power Supply (+12VDC to + 5VDC) and required software. Ensure it contains any configuration jumpers to be compatible with current GDOT Applications software. Ensure the 2070 2A field I/O Module functions with a Model 2070 L or 2070LB Controller Assembly and is compatible with current GDOT applications software.

3. 2070 3B Front Panel Display Module:

The 2070 3B Display Module may be supplied as a separate item and provides a Front Panel Assembly controller, two keyboards, AUX switch alarm bell and an 8 line by 40 character display. This assembly shall also include a panel with latch assembly and two TSD #1 hinge attaching devices, assembly PCB, external serial port connectors, CPU active LED indicator, contrast adjustment knob, and Front Panel Harness. Ensure it contains any configuration jumpers to be compatible with current GDOT Applications software. Ensure the 2070 3B Front Panel Assembly Module functions with Models 2070 L, 2070 LC, 2070 LCN1 and 2070 LCN2 Controller Assemblies and is compatible with current GDOT applications software. Ensure the hardware hinge attaching devices mate with existing 2070 assemblies. Ensure the Front Panel Harness is connected to the front panel via a removable connector. Ensure the front panel connector supports the aux switch.

5. 2070 4A Power Supply Module:

The 2070 4A Power Supply Module may be supplied as a separate item and is an independent, self contained module. Ensure that it is vented and cooled by convection only. Provide module that slides into power supply compartment from the back of the chassis and is attached to the Backplane mounting surface by its four TSD #3 Devices. Ensure the module supplies at least 3.5 amperes of +5VDC. Ensure the 2070 4A Power Supply Module is compatible with Models 2070 L, 2070 LB, and 2070 LC Controller Assemblies and is compatible with current GDOT applications software. Ensure the connection harness PS 2 on existing units can be mated with the 4A module supplied.

6. 2070 7A Communications Module:

The 2070 7A Communications Module may be supplied as a separate item. The 7A communications module is a dual async serial communications module. Ensure the module supports serial communications on both ports. Ensure it contains any configuration jumpers to be compatible with current GDOT Applications software.

B. Fabrication

General Provisions 101 through 150.

C. Acceptance

(See Subsection 925.2.01 for compliance with CALTRANS QPL).

D. Materials Warranty:

(See Subsection 925.2.D for Materials Warranties).

925.2.03 Type 332A Cabinet Assemblies

A. Requirements

Ensure that the cabinet assembly meets the requirements of the CALTRANS Specifications as described in this document.

In addition to the CALTRANS Specifications, ensure that the cabinet assembly conforms to the requirements listed below, which take precedence over conflicting CALTRANS Specifications.

1. Cabinet configuration:

Supply cabinets in accordance with these specifications. Equip the cabinets with auxiliary equipment as follows:

a. Model 332A Cabinet:

1 – 2070E Controller

1 – 2010ECLip Conflict Monitor

3 – Model GDI 242J DC Isolator in Slots I-12, I-13 and I-14 (Upper Input File)

4 – Flash Transfer Relays

2 – Model 204 Flashers

12 – Switch Packs Model 200 Type

1– 4 Position Power Strip for Auxiliary Power requirements.

1- 206L cabinet power supply with low power consumption ability

Note: Include above components in cabinet at time of delivery. Documentation must accompany each cabinet indicating that the equipment listed above was tested for operation and full compatibility prior to delivery to Douglas County. Douglas County shall have the right to request that the cabinet be configured, programmed and made operational for a specific signalized location. The cabinet shall be marked accordingly with that location. The cabinet shall thus be configured so that no programming of the controller, conflict monitor, detectors or cabinet setup (switches, cables, resistors, etc.) shall be necessary by Douglas County or their contractors.

2. Finish

Use cabinets that have a bare aluminum finish and the internal racks shall have a galvanized finish to prevent rusting (see Subsection 925.2.06.A.1 for controller-cabinet minimum fabrication specifications).

3. Locks

Equip the main cabinet door with locks that accept No. 2 Corbin keys. Provide two sets of keys with each cabinet. One set of keys is defined as one – No. 2 key and one - police panel key.

4. Power

Equip the cabinet assemblies with a 206L power distribution assembly to generate AC and DC power for the electronic components, except the DC power for the controller units. Provide the Model 332 cabinets with a GDI 242 DC isolator for stop time/flash sense, located in slot 14 of the input file.

5. Unused Phase Monitoring

Provide odd-phase reds with ballast resistor dummy loads. Do not wire the cabinet to monitor pedestrian yellow indications.

Neatly lace and bundle the wiring from the signal monitor for pedestrian yellow monitoring on the back panel.

6. Red Monitoring

Provide a connector and terminal assembly designated as P20 (Magnum P/N 722120 or equivalent) for monitoring the absence of red as an integral part of the output file. The output file red monitoring board shall be programmed by means of dip switches. "Jumpers" shall not be acceptable. No tools shall be required to change a phase to red monitoring.

Terminate the connector and ensure compatibility with the cable and C connector of a Type 2010 conflict monitor unit capable of monitoring the absence of red.

The Red Enabled Board shall consist of dip switches to assign phases either as normal to tied to AC+. No tools shall be required to change the phase being monitored to either normal or AC+. The red enable board shall not use any jumpers to program this operation.

Submit details for programming of the unused red channels for approval.

7. Cabinet Light

Include in each cabinet one fluorescent lighting fixture mounted inside the top front portion of the cabinet.

The fixture includes a cool white lamp, covered, and operated by a normal power factor, UL listed ballast.

Install a door-actuated switch to turn on the cabinet light when either door is opened.

8. Cabinet Interlock

<u>Do not install</u> the interlock circuit, as detailed in the CALTRANS Specifications.

9. Cabinet Drawer

Equip each Model 332A cabinet with an aluminum storage compartment mounted in the rack assembly with the approximate following dimensions: 16 inches (400 mm) wide, 14 inches (350 mm) long, and 1.75 inches (44 mm) deep.

Mount this compartment directly under the Type 2070 controller. Provide a drawer with telescoping drawer guides to allow full extension from the rack assembly.

When extended, the storage compartment opens to provide storage space for cabinet documentation and other miscellaneous items.

Ensure that the storage compartment be of adequate construction to support a weight of 25 pounds (12 kg) when extended.

Provide a top for the storage compartment that has a non-slip plastic laminate attached, which covers a minimum of 90% of the surface area of the top.

10. Auxiliary Equipment Shelf

Provide a "shelf" in each cabinet that provides a location to mount Fiber modem, dialup modem and/or Field hardened switch. Provide shelf in location that allows easy access to AC power outlets and communications links (telephone, interconnect). Locate shelf so as to not block access to other equipment or modules including Battery Backup System.

11. Power Strip

Equip each cabinet with a power strip (minimum of 4 outlets) to support AC power for external communications devices in cabinet. Ensure that power strip may be used by block power supplies such that the block power supply does not block other outlets. Attach power strip to a

permanent location that is easily accessible to devices in the rear of the cabinet. Do not plug power strip into GFI outlet.

12. Surge Protection

Equip each cabinet with EDCO surge protectors to protect the control equipment from surges and over voltages.

Design the surge protector panels to allow for adequate space for a wire connection and surge protector replacement without the removal of terminal blocks or panels. Provide EDCO surge protectors for the input sections as detailed below and as shown in the Input Terminal and Surge Arrestor Detail.

Supply EDCO surge protectors that meet the following specifications.

a. AC SERVICE INPUT

Each cabinet shall include a plug-able surge protection unit on the AC service input that meets or exceeds the following requirement: (EDCO SHA-1250 or equivalent utilizing 16 pin Beau connectors). The surge arrestor shall be a multi stage series hybrid type power line surge device. The surge arrestor shall be installed between the applied line voltage and earth ground. The unit shall have 2 LED indicators for operational display status. The surge arrestor shall be capable of reducing the effect of lightning transient voltages applied to the AC line and provide filtering that conforms to 50 kHz with a minimum insertion loss of 50db. The arrestor shall conform to the following:

- Peak surge current for an 8 X 20 microsecond waveform; 20,000 A for 20 occurrences.
- Clamp voltage at 20,000 A; 280 V max.
- Maximum continuous operating current at 120 V/60 Hz: 15 A
- Series Inductance: AC Line/AC Neutral 200 microhenries.
- Response time: (< a nanosecond) Voltage never exceeds 280V during surge.
- Temperature range: -40 to +85 degrees Celsius
- Spike suppression for +/- 700V spike: +/- 40 V deviations from sine wave all phase angles between 0 and 180 degrees.

The arrestor shall have the following terminals:

- Main Line (AC line first stage terminal)
- Main Neutral (AC neutral input terminal)
- Equipment Line In (AC line second stage input terminal, 10A)
- Equipment Line Out (AC line second stage output terminal, 10A)
- Equipment neutral out (neutral terminal to protected equipment)
- Ground (GND) (earth connection).

The arrestor shall be encapsulated in a flame-retardant material.

The equipment line out shall provide power to the Type 2070L controller and to the 24 V power supply.

The unit shall be a two-stage device that will allow the connection of the radio interference filter in the circuit between the stages.

EDCO # SHA-1250 or equivalent

b. INTERCONNECT CABLE INPUTS

Use a surge protection device to protect each interconnect line as it enters the cabinet with a surge protection device that meets or exceeds the following requirements:

Peak Surge Trip Point:

600 V/microsecond impulse	<890 volts
3000 V/microsecond impulse	<950 volts
Response Time	<200 ns at 10k/μs
Temperature:	-40° F to +185° F (-40º C to 85º C)
Peak Current (8 x 20 μs impulse)	20,000 Amp per circuit
Estimated occurrences:	25 @ 10kA
Insulation Resistance	under 200 V @ 1000 A
Max Operating Line Current	1 ampere

EDCO # SPA-60B or equivalent

c. INDUCTIVE LOOP DETECTOR INPUTS

<u>This article sets forth the specifications for two types of loop detector surge protectors: one, which mounts directly on terminal blocks and one, which mounts on a self-contained stud.</u>

General Requirements:

All loop detector surge protectors shall conform to the following requirements.

Number of 100-ampere surge current occurrences of a 10 x 700-microsecond waveform:

Common mode:	at least 25
Differential mode;	at least 25

Clamp characteristics (common and differential modes):

Maximum break-over voltage:	170 volts
Maximum on-state clamping voltage:	3 volts
Response time:	less than 5 nanoseconds
Off-state leakage current:	less than 10 microamperes
Capacitance (common and differential modes):	less than 220 picofarads
Temperature range:	-40 to +85 degrees Celsius
Maximum dimensions:	2”x2”x1.25”

The surge protection shall operate properly with the loop type vehicle detectors specified in Section 5.

Type TB Loop Detector Surge Protectors – **EDCO # SRA6LCA-916, SRA6LCA-716 or equivalent**

Type TB loop detector surge protectors shall conform to all of the requirements of paragraph 6.2.1. The Type TB surge protector shall have three integral spade lugs that shall enable the unit to be mounted and connected directly to a terminal block. The Type TB surge protector

shall be furnished for either 7/16-inch or 9/16-inch terminal spacing as required by the bid list or as required to match the terminal blocks to which it is to be connected in each instance.

Type SC Loop Detector Surge Protectors – **EDCO # SRA-6LC or equivalent**

Type SC loop detector surge protectors shall conform to all of the requirements of paragraph 6.2.1. The Type SC surge protector shall have in integral 3/8-inch (minimum) long NO. 10-32 mounting and grounding stud.

d. OUTPUT FILE SIGNAL SWITCH PACKS PROTECTORS

The output of the switch pack in the output file shall be protected by metal oxide arrestors (MOV), which are tied from the AC positive field terminal to chassis ground to protect switch packs from surges occurring on the AC output lines.
Surge suppression for the field wiring shall be installed on the back of the output file.
Each protector will have three leads and a ground stud and meet the following general requirements.

Peak Surge Current……10kA (8x20µs)
Occurrences…….>100 @ 200 Amps
Voltage Clamp…….…… 475 V

EDCO # SPA-303 or equivalent

e. COMMUNICATION INPUTS

This article sets forth the specifications for a communications surge protector.

General Requirements:
All communications surge protectors shall conform to the following requirements.

Surge current occurrences at:

2000 amperes, 8x20 microsecond waveform:	at least 80
400 amperes, 10x700-microsecond waveform:	at least 80

Peak surge current for:	10,000 amperes
8x20 microsecond waveform:	(2,500 amperes/line)
100x 700-microsecond waveform:	500 amperes/line

Response time:	< 1 nanosecond
Series resistance:	15 ohms, maximum
Capacity, average:	1500 picofarads
Temperature range:	-40 ^{o}F (-40 ^{o}C) to +185 ^{o}F (85 ^{o}C)
Clamp Voltage:	8V line to line

This unit shall be a hybrid device with the first stage formed by a 3-element gas tube that will withstand a peak surge current (8x20 microsecond waveform) of 5000 amperes per side. The second stage shall dissipate at least 1.5 kilowatts.

No tools shall be required for the insertion and removal of the surge protector.

Type SC Communications Surge Protectors – **EDCO # PC642C-008 or equivalent**
Type SC communications surge protectors shall conform to all of the above requirements and shall service up to two communications circuit pairs. The Type SC surge protector shall have a printed circuit board card-edge connector that will mate with a Buchannan PN PCB 1B-10A connector. The contact strips shall be gold-plated. The Type SC surge protector shall be furnished with a mating socket. The maximum size of the Type SC surge protector with its socket shall be 2”x2.75”x 1.25”.

f. Low Voltage DC Inputs

Provide an external surge protection device for each low voltage DC input channel which meets or exceeds these requirements:

Surge current occurrences at:

2000 amperes, 8x20 microsecond waveform:	at least 80
400 amperes, 10x700-microsecond waveform:	at least 80

Peak surge current for:	10,000 amperes
8x20 microsecond waveform:	(2,500 amperes/line)
100x 700-microsecond waveform:	500 amperes/line

Response time:	< 1 nanosecond
Series resistance:	15 ohms, maximum
Capacity, average:	1500 picofarads
Temperature range:	-40 ^{o}F (-40 ^{o}C) to +185 ^{o}F (85 ^{o}C)
Clamp Voltage:	30V line to line

This unit shall be a hybrid device with the first stage formed by a 3-element gas tube that will withstand a peak surge current (8x20 microsecond waveform) of 5000 amperes per side. The second stage shall dissipate at least 1.5 kilowatts.

No tools shall be required for the insertion and removal of the surge protector.

Type SC Communications Surge Protectors – **EDCO # PC642C-030 or equivalent**
Type SC communications surge protectors shall conform to all of the above requirements and shall service up to two communications circuit pairs. The Type SC surge protector shall have a printed circuit board card-edge connector that will mate with a Buchannan PN PCB 1B-10A connector. The contact strips shall be gold-plated. The Type SC surge protector shall be furnished with a mating socket. The maximum size of the Type SC surge protector with its socket shall be 2”x2.75”x 1.25”.

g. COAXIAL VIDEO CABLES

This unit shall be a hybrid device, with the first stage formed by a gas tube that will withstand a peak surge current (8x20 microsecond waveform) of 5000 amperes. The second stage shall dissipate at least 1.5 kilowatts. **EDCO # CX06 Series or equivalent**

Peak Surge Current

8x20us……10K (2500A per line)
10x700us……...……500A per line
Technology……...Hybrid, Solid State
Attenuation……...0.1db @ 10 MHz
Response Time……..……<1 nanosecond
Protection……..Signal to ground
Clamp Voltage……...……6 volts
Connectors…….BNC, F, UHF
Impedance……50 or 75 ohms
Temperature……-40 to 85+ C
Humidity……0-95% non-condensing

h. HIGH FREQUENCY COAX PROTECTOR

The surge protector shall protect sensitive electronic equipment from damage due to excessive voltage or currents generated by lighting or static build-up. There shall be a replaceable protection cartridge and a low signal loss at frequencies up to 3 gigahertz. It should accommodate both bulkhead mount and stud mount. The Input and Output connections shall be interchangeable.

General Requirements

Frequency:	0 to 4000 MHz
Max Insertion Loss:	0.3 dB
Max VSWR:	1.2
Characteristic Impedance:	50 Ohms
DC Blocking:	None
Connectors:	Female N-Type
Breakdown Voltage:	350 V
Surge Current:	5000 Amps
Cartridge Life:	>600 Times @ 500 Amp pulse
Size:	1 x 1.25 x .875 (W x H x L)
Mounting Stud:	¼ x 20

EDCO # CX-HFN or equivalent

I. MEDIUM DUTY 120V AC (Parallel) SURGE SUPPRESSOR

The surge suppressor should protect AC distribution panel circuits or 120V power supplies feeding sensitive electronic equipment. It should be designed to be installed in parallel on standard single-phase 120V AC (L, N, and G) circuits. The installation should be able to be close-nipple up to a distribution panel/circuit or hardwired in parallel up to power supply input terminal screws.

General Requirements

Peak Surge Current (8x20us):	6500 A
Response Time:	<5 nanoseconds
Voltage Clamp 8x20us (100A):	325V

Power Dissipation:	180 Joules
Operating Temp:	-40 C to +85 C
Size:	3” x 1.5” x 2.5” (L x W x H)
Leads:	(3) 12”, 14 AWG

EDCO # FAS-120AC or equivalent

j. SURGE PROTECTION FOR COMPUTERS OR PERIPHERALS

The surge protector should utilize silicon avalanche clamp devices. It should be able plug in series with the data cable at or near the equipment to be protected.

General Requirements

Max Operating Voltage (10 x 1000us):	± 20V
Leakage Current (typical):	5uA
Max Data Rate:	150 kb
Operating Temperature:	0 C to +85 C
Max Surge Current (10 x 1000us):	43A
Max Clamp Voltage:	35V
Clamp Response Time:	<1ns

EDCO # SRS-232 Series or equivalent

13. Type 2010 ECL (ip) Signal Monitors:

Section 1 INTRODUCTION

This specification sets forth the minimum requirements for a rack-mountable, sixteen channel, solid-state 2010 Signal Monitor for a Type 170 / 2070 Traffic Cabinet Assembly. At a minimum, the Signal Monitor shall comply with all applicable specifications outlined in Chapter 4 of the *California Traffic Signal Control Equipment Specifications*, January 1989. Where differences occur, this specification shall govern. The manufacturer of the unit shall be listed on the current California Department of Transportation (Caltrans) Qualified Products List (QPL) for signal monitors.

The Signal Monitor shall be capable of monitoring sixteen channels consisting of a Green input, a Yellow input, and a Red input for each channel. The unit shall also include the enhanced monitoring functions described in Section 2, diagnostic display functions described in Section 3, event logging functions described in Section 4, communications functions described in Section 5, and hardware functions described in Section 6.

The signal monitor shall be testable by the Athens Technical Specialists Inc. model PCMT-2600 Automated Conflict Monitor Tester executing the ODOT 2010 Standard test software. **2010ECL(ip) SIGNAL MONITOR SPECIFICATION**

2

Section 2 MONITOR FUNCTIONS

2.1 FAULT TIMING

All fault timing shall be computed for each channel individually except for the Conflict function.

2.2 CONFLICT MONITORING

The Signal Monitor shall be able to detect the presence of conflicting green or yellow signal voltages on the AC field terminals between two or more non-compatible channels. A Conflict fault (CONFLICT) shall be a latching fault.

2.2.1 CONFLICT RECOGNITION TIME

The Signal Monitor shall trigger when voltages on any conflicting channels are present for more than 500 ms. The Signal Monitor shall not trigger when voltages on any conflicting channels are present for less than 200 ms. Conflicting signals sensed for more than 200 ms and less than 500 ms may or may not trigger the unit.

2.3 24VDC MONITORING

The Signal Monitor shall be able to detect that the cabinet +24 Vdc supply has fallen below 18 Vdc. A 24VDC failure (24VDC) shall be a latching fault.

2.3.1 24VDC RECOGNITION TIME

The Signal Monitor shall trigger when the voltage on the +24V input is below 18 Vdc for more than 500 ms. The Signal Monitor shall not trigger when the voltage on the +24V input is below 18 Vdc for less than 200 ms. A voltage level of +22 Vdc shall be required to prevent the unit from triggering.

2.4 CONTROLLER WATCHDOG MONITORING

The Signal Monitor shall trigger when the Watchdog input does not toggle within the programmed time period (WDT ERROR). The unit shall remain latched in the fault state until reset by the Reset button, an External Reset input command or AC Line voltage restoring from an AC Line Brownout event (see 2.5.1). A reset resulting from an AC Line Brownout event shall not clear the WDT ERROR indicator.

2.4.1 CONTROLLER WATCHDOG LATCH OPTION

A programming option shall set the Watchdog monitoring function to a latching mode. Only a reset from the Reset button or External Reset input shall clear a WDT ERROR fault. An AC Line brownout condition shall not reset the fault.

2.4.2 CONTROLLER WATCHDOG RECOGNITION TIME

A programming option shall set the maximum Watchdog recognition time to 1000 +_100 ms or 1500 +_100 ms.

2.5 AC LINE MONITORING

2.5.1 AC LINE BROWNOUT RECOGNITION

The Signal Monitor shall be able to detect that the AC Line has fallen below 98 +_2 Vac for greater than 400 +_50 ms. This shall force the output Relay to the de-energized "fault" state, enable the Stop-Time output, and cause the AC POWER indicator to flash at a 2 Hz rate. The unit shall maintain this state until the AC Line voltage rises above 103 +_2 Vac for greater than 400 +_50 ms. **2010ECL(ip) SIGNAL MONITOR SPECIFICATION**

3

2.5.2 AC LINE POWER-UP AND BROWNOUT MINIMUM FLASH TIME

When the AC Line is greater than 103 +_2 volts after power-up or Brownout restore, the Signal Monitor shall hold the Output Relay in the de-energized "fault" state and enable the Stop-Time output, for a period of time programmed as the Minimum Flash Time. During this interval the AC POWER indicator shall flash at a 4 Hz rate.

2.6 RED FAIL MONITORING

The Signal Monitor shall be able to detect the absence of an active voltage on the green and yellow and red field signal inputs of a channel. A Red Fail fault (RED FAIL) shall be a latching fault. The Red Fail monitoring function shall be enabled except when the Red Enable input is not active, or pin #EE is active, or Special Function #1 input is active, or Special Function #2 input is active.

2.6.1 RED FAIL RECOGNITION TIME

The Signal Monitor shall trigger when an active voltage on one of the three inputs of a channel are absent for more than 1500 ms. The Signal Monitor shall not trigger when an active voltage on one of the three inputs of a channel are absent for less than 1200 ms. Channels without proper voltages sensed for more than 1200 ms and less than 1500 ms may or may not trigger the unit.

A Red Fail Timing option shall be provided which will change the fault recognition time to between 700 ms and 1000 ms.

2.6.2 SPECIAL FUNCTION PREEMPTION INPUTS

The Special Function Preemption inputs #1 and #2 shall provide an AC input to the unit which shall disable only Red Fail Monitoring when either input is sensed active.

2.6.3 RED INTERFACE CABLE FAULT

A programming option shall be provided such that operating without the Red Interface cable installed shall cause the Signal Monitor to enter the fault mode causing the Output relay contacts to close and enabling the Stop-Time output to the controller. To indicate this fault mode the Red Fail indicator shall be illuminated with all fault channel indicators Off.

Any Red Fail preemption control to the monitor shall use the Special Function inputs #1 or #2.

2.6.4 RED FAIL ENABLE PER CHANNEL PROGRAMMING

A per channel Red Fail Enable option shall be provided. When the option is selected, the SSM switches shall enable Red Fail monitoring when placed in the On position.

2.7 DUAL INDICATION MONITORING

The Signal Monitor shall be able to detect the presence of active voltage on the green and yellow, green and red, or yellow and red field signal inputs of a channel. A Dual Indication fault (DUAL IND) shall be a latching fault. This function shall be enabled on a per channel basis. The Dual Indication monitoring function shall be enabled for all selected channels except when the Red Enable input is not active or pin #EE is active.

2.7.1 DUAL INDICATION RECOGNITION TIME

The Signal Monitor shall trigger when multiple inputs are active on a channel for more than 500 ms. The Signal Monitor shall not trigger when multiple inputs are active on a channel for less than 250 ms. Channels with multiple voltages active for more than 250 ms and less than 500 ms may or may not trigger the unit.

A Dual Indication Timing option shall be provided which will change the fault recognition time to between 700 ms and 1000 ms. **2010ECL(ip) SIGNAL MONITOR SPECIFICATION**

4

2.8 CLEARANCE MONITORING

2.8.1 MINIMUM YELLOW CLEARANCE (SHORT OR ABSENT YELLOW) MONITORING

The Signal Monitor shall be able to detect the Yellow Clearance interval during a green to yellow to red sequence is less than the Minimum Sequence Recognition time. A Minimum Yellow Clearance failure (CLEARANCE) shall be a latching fault. This function shall be enabled on a per channel basis. The function shall be enabled for all selected channels except when the Red Enable input is not active or pin #EE is active.

2.8.2 CLEARANCE RECOGNITION TIME

The Minimum Clearance Recognition time shall be 2.7 seconds +_ 0.1 seconds.

2.9 RECURRENT PULSE DETECTION (RP DETECT)

The Signal Monitor shall detect Conflict, Red Fail, and Dual Indication faults that result from intermittent or flickering field signal inputs. These recurring pulses shall result in a latching fault with the RP DETECT indicator illuminated along with the resulting Conflict, Red Fail, or Dual Indication indicator. A programming option shall be provided to disable the RP Detect function.

2.10 FLASHING YELLOW ARROW PPLT SUPPORT

The Signal Monitor shall be designed to monitor an intersection with up to four approaches using the four section Flashing Yellow Arrow (FYA) movement outlined by the NCHRP Research Project 3-54 on Protected/Permissive signal displays with Flashing Yellow Arrows. Two cabinet configurations shall be supported depending on the number of load switches provided and the capabilities of the Controller Unit. In both modes the Signal Monitor shall be designed to provide the same fault coverage for the FYA approaches as it does for conventional protected left turn phases including Conflict, Red Fail, Dual Indication, and Minimum Yellow Clearance monitoring.

2.11 LED SIGNAL THRESHOLD ADJUST (LEDGUARD)

The MMU shall provide the capability to sense field inputs signals with the following thresholds:
Conflict, Dual Indication Low Threshold Signal Inputs (Green, Yellow, and Red)
No Detect ..... less than 15 Vrms
Detect ..... greater than 25 Vrms
Red Fail High Threshold Signal Inputs (Green, Yellow, and Red)
No Detect ..... less than 50 Vrms
Detect ..... greater than 70 Vrms

2.12 EXIT FLASH

When the Signal Monitor exits the flash state (Output relay de-energized) as a result of a Reset command or AC Line brownout restore, the Stop Time output shall go to the inactive state 250 _+ 50 ms before the Output relay transfers to the energized state. This transition will provide an early indication to the Controller Unit that the cabinet will transfer from flash to signal operation. **2010ECL(ip) SIGNAL MONITOR SPECIFICATION**

5

Section 3 DISPLAY FUNCTIONS

3.1 FULL INTERSECTION DISPLAY

It shall be possible to view the active channels for each individual color (GYR) during operation and when latched in a fault state. The Signal Monitor shall have a full intersection display consisting of sixteen Green, sixteen Yellow, and sixteen Red LED indicators for channel status.

When the Signal Monitor is latched in a fault state it shall also be possible to view the active channels for each individual color and fault status for each channel for the current fault and the two previous faults.

3.2 PREVIOUS FAULT GYR DISPLAY

When the Signal Monitor has been triggered by a fault the channel status display will alternate between the channels which were involved in the fault (fault status) for 2 seconds, and the field signals active at the time of the fault for 6 seconds. The channels involved in the fault will flash their respective Green, Yellow, and Red indicators simultaneously at a 4 Hz rate for the 2 second interval.

The two previous faults may be also be displayed individually. This status is not reset by an AC Line power interruption. To enter this Previous Fault Display mode, remove the Program Card. The sequence is as follows:

Reset Event PCA LED Fault Status LEDs Channel Status LEDs

--- #1 Single flash Current Fault Status (newest) Current Field status

#1 #2 Double flash Event #2 Fault Status Event #2 Field status

#2 #3 Triple flash Event #3 Fault Status (oldest) Event #3 Field status

(repeats back to top)

To exit this Previous Fault Display mode, replace the Program Card. **2010ECL(ip) SIGNAL MONITOR SPECIFICATION**

6

Section 4 EVENT LOGGING FUNCTIONS

4.1 EVENT LOGGING

The Signal Monitor shall be capable of storing in non-volatile memory a minimum of 100 events. Each event shall be marked with the time and date of the event. These events shall consist of fault events, AC Line events, reset events, and configuration change events. A graphical means of displaying the signal states of all field inputs for 30 seconds prior to a fault trigger event shall also be provided. The capability to assign an eight digit identification number to the unit shall be provided. The event logs shall be uploaded to a PC using either of the serial ports of the Signal Monitor and software provided by the manufacturer.

Each event log report shall contain the following information:

1. Monitor ID#: an eight digit (0-99999999) ID number and 30 character ID name assigned to the monitor.
2. Monitor Firmware Version: The firmware version and type number.
3. Time and Date: time and date of occurrence.
4. Event Number: identifies the record number in the log. Event #1 is the most recent event.

4.2 MONITOR STATUS REPORT

The Current Status (CS) report shall contain the following information:

1. Fault Type: the fault type description.
2. Field Status: the current GYR field status and field RMS voltages if the monitor is not in the fault state, or the latched field status and field RMS voltages and fault channel status at the time of the fault.
3. Time and Date: the current time and date if the monitor is not in the fault state, or the latched time and date at the time of the fault.
4. Monitor Temperature: the current temperature if the monitor is not in the fault state, or the latched temperature at the time of the fault.
5. AC Line Voltage: the current AC Line voltage if the monitor is not in the fault state, or the AC Line voltage at the time of the fault.
6. Control Input Status: the current state and RMS voltages of the Red Enable input, EE input, and Special Function #1 and #2 inputs if the monitor is not in the fault state, or the status latched at the time of the fault.

4.3 PREVIOUS FAULT LOG

The Previous Fault (PF) log shall contain the following information:

1. Fault Type: the fault type description.
2. Field Status: the latched field status with RMS voltages, and fault channel status at the time of the fault.
3. Time and Date: the latched time and date at the time of the fault.
4. Monitor Temperature: the latched temperature at the time of the fault.
5. AC Line Voltage: the AC Line voltage at the time of the fault.

6. Control Input Status: the latched state of the Red Enable input, EE input, and Special Function #1 and #2 inputs at the time of the fault.

4.4 AC LINE EVENT LOG

The AC Line (AC) log shall contain the following information:

1. Event Type: describes the type of AC Line event that occurred.

a. Power-up - AC on, monitor performed a cold start

b. Interrupt - AC Line < Brownout level

c. Restore - AC restored from brown-out or interruption, no cold start

2. AC Line Voltage: the AC Line voltage at the time of the event.
3. Time and Date: the time and date of the event.

4.5 MONITOR RESET LOG

The Monitor Reset (MR) log shall contain the following information:

1. Event Type: The monitor was reset from a fault by the front panel Reset button or External Reset input.
2. Time and Date: the time and date of the event.

4.6 CONFIGURATION CHANGE LOG

The Configuration Change log shall contain the following information:

1. Programming parameters and any additional programming parameters resulting from hardware configuration settings.
2. The log shall indicate which items have been changed since the last log entry.
3. Time and Date: the time and date of the event.

4.7 SIGNAL SEQUENCE LOG

A minimum of five logs shall be provided that graphically displays all field signal states for up to 30 seconds prior to the current fault trigger event. The resolution of the display shall be at least 50 milliseconds.

4.8 INTERFACE SOFTWARE

The Agency shall be licensed for unlimited use of the monitor interface software. **2010ECL(ip) SIGNAL MONITOR SPECIFICATION**

8

Section 5 COMMUNICATIONS FUNCTIONS

5.1 COMMUNICATIONS FUNCTIONS

The Signal Monitor shall have a communications port that provides the capability to send status and event information as described in Section 4 to a Controller Unit or Personal Computer.

Communications shall operate independently of the Signal Monitor. That is, communications functions shall not be adversely affected by other Signal Monitor functions; nor shall communications adversely impact the other operations of the Signal Monitor.

5.1.1 EIA-232 PORT SETTINGS (2010ECL)

The serial port settings shall provide the following parameter values at a minimum:

1. 1200, 2400, 4800, or 9600 bits/sec asynchronous

2. No parity, Even parity, Odd parity

3. 8 bit data, 1 Stop bit

4. DTR handshake enable

5.2 CONTROLLER UNIT COMMUNICATIONS

In addition to the protocol described in Section 4, the Signal Monitor shall be compatible with the Command/Response protocol of BI Tran Systems Inc. Model 233 Software for sixteen channel operation. The unit shall support command types 02 and 07.

5.3 PERSONAL COMPUTER COMMUNICATIONS

The manufacturer shall provide software to access the Signal Monitor status and event logs described in Section 4. This software shall operate with Microsoft WindowsNT™ or WindowsXP™ or WindowsVista™.

5.3.1 WAN NETWORK DISCOVERY (2010ECLIP)

The communications software running on the PC shall be able to search the network and display a list of IP addresses and Monitor IDs of monitors responding on the network. The communications software shall also be capable of making changes to the monitor network parameters such as IP address and subnet mask.

5.3.2 ETHERNET PORT HTML INTERFACE (2010ECLIP)

An HTML based capability shall be provided in the monitor to configure the network parameters of the MMU Ethernet port using a standard HTML browser. **2010ECL(ip) SIGNAL MONITOR SPECIFICATION**

9

Section 6 HARDWARE

6.1 RED MONITORING

6.1.1 RED FIELD INPUTS

The Signal Monitor shall be capable of monitoring sixteen Red field signals. A Red input shall be sensed active when the input voltage exceeds 70 Vrms. A Red input shall be sensed not active when the input voltage is less than 50 Vrms. A Red input may or may not be sensed active when the input voltage is between 50 Vrms and 70 Vrms.

6.1.2 RED ENABLE INPUT

The Red Enable input shall provide an AC input to the unit which shall enable Red Monitoring, Dual Indication Monitoring, and Sequence monitoring when the input is sensed active. The Red Enable input shall be sensed active when the input voltage exceeds 70 Vrms. The Red Enable input shall be sensed not active when the input voltage is less than 50 Vrms. The Red Enable input may or may not be sensed active when the input voltage is between 50 Vrms and 70 Vrms.

6.1.3 SPECIAL FUNCTION PREEMPTION INPUTS

The Special Function Preemption inputs #1 and #2 shall provide an AC input to the unit which shall disable only Red Fail Monitoring when either input is sensed active.

A Special Function input shall be sensed active when the input voltage exceeds 70 Vrms. A Special Function input shall be sensed not active when the input voltage is less than 50 Vrms. A Special Function input may or may not be sensed active when the input voltage is between 50 Vrms and 70 Vrms.

A programming option shall be provided to invert the active status of the Special Function #1 input. When the option is enabled, the Special Function #1 input shall be sensed Not active when the input voltage exceeds 70 Vrms. The Special Function #1 input shall be sensed active when the input voltage is less than 50 Vrms. The Special Function #1 input may or may not be sensed active when the input voltage is between 50 Vrms and 70 Vrms.

6.1.4 RED INTERFACE CONNECTOR

This connector provides the required inputs for the unit to monitor the Red field signal outputs. It shall be a 3M #3428-5302 type or equivalent and be polarized to insure proper mating with the cable. Ejector latches shall be included to facilitate removal and prevent the cable from inadvertently disconnecting. The unit shall function as a standard 210 Signal Monitor when the cable is disconnected. The pin assignments shall be as shown in Section 8.2.

6.2 REAL-TIME CLOCK

The Signal Monitor shall contain a real-time clock that maintains the current Year, Month, Day of Month, Day of Week, Hour, Minute, and Second. The real time clock shall maintain the current time information during power outages. It shall continue to maintain accurate time during power outages of at least 30 days in duration. The real rime clock shall provide automatic daylight savings time correction. The monitor shall function correctly in all respects with regard to Year 2000 issues.

6.3 FRONT PANEL

The front panel shall be constructed of sheet aluminum with a minimum thickness of 0.090", and shall be finished with an anodized coating. The model information shall be permanently displayed on the front surface.

6.3.1 INDICATORS
All display indicators shall be mounted on the front panel of the Signal Monitor and shall be water clear, T-1 package, Super Bright type LEDs. All fault LEDs shall be red except the PWR indicator which shall be green. A separate Red, Yellow, and Green indicator shall be provided for each channel. The indicators shall be labeled and provide the information as follows:

6.3.1.1 AC POWER
The AC POWER indicator shall flash at a rate of 2 Hz when the unit has detected a low voltage condition as described in Section 2.5.1. The AC POWER indicator shall flash at a rate of 4 Hz during the minimum flash interval as described in Section 2.5.2. It shall illuminate when the AC Line voltage level is restored above the brownout level. The indicator shall extinguish when the AC Line voltage is less than 80 Vrms.

6.3.1.2 24VDC FAIL
The 24VDC indicator shall illuminate when a 24VDC fault condition is detected. This indicator remains extinguished if the monitor has not been triggered by a 24VDC fault.

6.3.1.3 WATCHDOG ERROR
The WDT ERROR indicator shall illuminate when a controller Watchdog fault is detected.

6.3.1.4 CONFLICT
The CONFLICT indicator shall illuminate when a conflicting proceed signal fault is detected.

6.3.1.5 DIAGNOSTIC
The DIAGNOSTIC indicator shall illuminate when one of the following faults are detected: Internal MPU Watchdog fault, Memory Test fault, or Internal power supply fault. This indicator is intended to inform the service technician of a monitor hardware or firmware failure.

6.3.1.6 RED FAIL
The RED FAIL indicator shall illuminate when an absence of signal is detected on a channel(s). If the Red Enable input is not active, or a Special Function input is active, or the EE input is active the RED FAIL indicator shall flash ON once every two seconds.

6.3.1.7 DUAL INDICATION
The DUAL indicator shall illuminate when a GY-Dual or GR-Dual or YR-Dual Indication fault is detected on a channel(s).

6.3.1.8 CLEARANCE
The Clearance indicator shall illuminate when the Minimum Yellow Clearance or Minimum Yellow plus Red Clearance time has not been met on a channel(s).

6.3.1.9 PCA
The PCA indicator shall illuminate if the Program Card is not inserted.
If the unit is in the Diagnostic Display mode, the PCA indicator shall flash ON (once, twice, or three times) to indicate the fault event number being displayed. See Section 3.2.

6.3.1.10 RP DETECT
The RP DETECT indicator shall illuminate when the unit has detected a Conflict, Red Fail, or Dual Indication fault as a result of recurring pulse field inputs.

6.3.1.11 CHANNEL STATUS
During normal operation the 48 Channel Status indicators shall display all active signals (Red, Green, and Yellow).
In the fault mode the Channel Status indicators shall display all signals active at the time of the fault for six seconds and then indicate the channels involved in the fault for 2 seconds. If an RP Detect condition was detected, the Channel Status indicators shall display all signals active at the time of the fault for six **2010ECL(ip) SIGNAL MONITOR SPECIFICATION**
11

seconds, then indicate the channels involved in the fault for 2 seconds, and then indicate the channels with RP Detect status for 2 seconds.

6.3.1.12 COMM

The COMM indicator will illuminate for a period of 50 ms when a valid frame is received on the EIA-232 or Ethernet port. The COMM indicator will flash at a 4 Hz rate if the port is disabled due to the DTR signal in the false state while a frame is in the transmit queue.

6.3.2 FRONT PANEL CONTROL

1. RESET Button: A momentary SPST Control switch labeled RESET shall be provided on the unit front panel to reset the monitor circuitry to a non-failed state. The switch shall be positioned on the front panel such that the switch can be operated while gripping the front panel handle. A reset command issued from either the front panel button or External Reset input shall be a one-time reset input to prevent the unit from constant reset due to a switch failure or constant external input, and shall cause all LED indicators to illuminate for 300 ms.

The Reset button also provides control of the Diagnostic Display mode. For a complete description of Diagnostic Display operation see Section 3.2.

6.3.3 EIA-232 SERIAL COMMUNICATIONS CONNECTOR (2010ECL)

This connector shall be used to provide EIA-232 serial communications. It shall be an AMP 9721A or equivalent 9 pin metal shell D subminiature type with female contacts. Pin assignments shall be as shown in Section 8.3.
The port shall provide jumper options to allow the connection of Pin #4 to be made with Pin #7, and the connection of Pin #8 to be made with Pin #1.

6.4 ELECTRONICS

6.4.1 RMS VOLTAGE SAMPLING

High speed sampling techniques shall be used to determine the true RMS value of the AC field inputs and AC Line input. Each AC input shall be sampled at least 32 times per cycle. The RMS voltage measurement shall be insensitive to phase, frequency, and waveform distortion.

6.4.2 INTERNAL MPU WATCHDOG

A microprocessor shall be used for all timing and control functions. Continuing operation of the microprocessor shall be verified by an independent monitor circuit, which shall force the Output Relay to the de-energized "fault" state, enable the Stop-Time output, and illuminate the DIAGNOSTIC indicator if a pulse is not received from the microprocessor within 300 ms.
If the microprocessor should resume operation, the Signal Monitor shall continue to operate. This monitoring circuit shall also be configurable with a jumper option to latch in the fault state. Once triggered, the unit shall require a power-up cycle to reset the circuit.

6.4.3 SOCKETS

In the interest of reliability, only the PROM memory device for the microprocessor firmware may be socket mounted.

6.4.4 INTERNAL POWER SUPPLY

A built-in, high-efficiency switching power supply shall generate all required internal voltages. All supply voltages shall be regulated. Failure of the internal power supply to provide proper operating voltages shall force the output Relay to the de-energized "fault" state, enable the Stop-Time output, and illuminate the DIAGNOSTIC indicator. A user replaceable slow blow fuse shall be provided for the AC Line input. The unit shall be operational over the AC Line voltage range of 75 Vac to 135 Vac.

6.4.5 EIA-232 PORT (2010ECL)

The EIA-232 port interface electronics shall be electrically isolated from all monitor electronics except chassis ground. **2010ECL(ip) SIGNAL MONITOR SPECIFICATION**

6.4.6 ETHERNET PORT (2010ECLIP)
An Ethernet port shall be provided on the front panel. The Ethernet port shall be electrically isolated from the MMU electronics and shall provide a minimum of 1500 Vrms isolation. The connector shall be an RJ-45 eight pin connector.

6.4.7 CONFIGURATION PARAMETERS
Designs using a battery to maintain configuration data shall not be acceptable.

6.4.8 FIELD TERMINAL INPUTS
All 120 Vac field terminal inputs shall provide an input impedance of 150K +_50K ohms and be terminated with a discrete resistor having a power dissipation rating of 0.5 Watts or greater and a voltage rating exceeding 350 volts.

6.4.9 COMPONENT SPECIFICATIONS
All electrical components used in the Signal Monitor shall be rated by the component manufacturer to operate beyond the full unit operating temperature range of -34$_o$C to +74$_o$C.

6.4.10 PRINTED CIRCUIT BOARDS
All printed circuit boards shall meet the requirements of the *California Traffic Signal Control Equipment Specifications*, January 1989, plus the following requirements to enhance reliability:

1. All plated-through holes and exposed circuit traces shall be plated with solder.

2. Both sides of the printed circuit board shall be covered with a solder mask material.

3. The circuit reference designation for all components and the polarity of all capacitors and diodes shall be clearly marked adjacent to the component. Pin #1 for all integrated circuit packages shall be designated on both sides of all printed circuit boards.

4. All electrical mating surfaces shall be gold plated.

5. All printed circuit board assemblies shall be coated on both sides with a clear moisture-proof and fungus-proof sealant.

6. All components and wire harnesses shall be mounted to the PCB using plated holes. "Piggy back" connections or jumper wires shall not be acceptable.

Section 7 SPECIFICATIONS

7.1 ELECTRICAL

7.1.1 POWER REQUIREMENTS

Operating Line Voltage ..... 75 to 135 Vrms
Operating Line Frequency..... 60 _+3Hz
Power Consumption ..... 10W (maximum)

7.1.2 AC VOLTAGE MONITORS

Green Signal Inputs (no detect) ..... less than 15 Vrms
(detect) ..... greater than 25 Vrms
Yellow signal Inputs (no detect) ..... less than 15 Vrms
(detect) ..... greater than 25 Vrms
Red Signal Inputs (no detect) ..... less than 50 Vrms
(detect) ..... greater than 70 Vrms
Red Enable Input (no detect) ..... less than 50 Vrms
(detect) ..... greater than 70 Vrms
Special Function Inputs (no detect) ..... less than 50 Vrms
(detect) ..... greater than 70 Vrms
AC Line Brown-out (drop-out) ..... 98 _+2 Vrms
(restore) ..... 103 _+2 Vrms

7.1.3 DC VOLTAGE MONITORS

+24VDC Input (fault) ..... less than +18 Vdc
(no fault) ..... greater than +22 Vdc
External Reset Input (true) ..... less than 3.5 Vdc
(false) ..... greater than 8.5 Vdc
Watchdog Input (true) ..... less than 3.5 Vdc
(false) ..... greater than 8.5 Vdc

7.2 TIMING FUNCTIONS

Conflict (no fault) ..... less than 200 milliseconds
(fault) ..... greater than 500 milliseconds
(typical) ..... 350 milliseconds
24VDC Fail (no fault) ..... less than 200 milliseconds
(fault) ..... greater than 500 milliseconds
(typical) ..... 400 milliseconds
Watchdog 1.0 second (no fault) ..... less than 900 milliseconds
(fault) ..... greater than 1100 milliseconds
(typical) ..... 1000 milliseconds
Watchdog 1.5 second (no fault) ..... less than 1400 milliseconds
(fault) ..... greater than 1600 milliseconds
(typical) ..... 1500 milliseconds
Red Fail (no fault) ..... less than 700 milliseconds
(fault) ..... greater than 1000 milliseconds
(typical) ..... 850 milliseconds
Red Fail (2010) (no fault) ..... less than 1200 milliseconds
(fault) ..... greater than 1500 milliseconds
(typical) ..... 1350 milliseconds
Dual Indication (no fault) ..... less than 200 milliseconds
(fault) ..... greater than 500 milliseconds
(typical) ..... 400 milliseconds
Clearance (no fault) ..... greater than 2.8 seconds **2010ECL(ip) SIGNAL MONITOR SPECIFICATION**

14

(fault) ..... less than 2.6 seconds
Brown-out (drop-out) ..... 400 _+50 milliseconds
(restore) ..... 400 _+50 milliseconds
Minimum flash after restore ..... 6 +_0.5 seconds
Maximum flash after restore ..... 10 +_0.5 seconds

7.3 MECHANICAL

Height ..... 9.3 inches
Width ..... 1.38 inches
Depth ..... 10.17 inches

7.4 ENVIRONMENTAL

Storage Temperature Range ..... -55 to +90 ^{o}C
Operating Temperature Range ..... -37 to +74 ^{o}C
Humidity Range ..... 0 to 95% Relative

2010ECL(ip) SIGNAL MONITOR SPECIFICATION

15

Section 8 WIRING ASSIGNMENTS

8.1 MONITOR UNIT CONNECTOR Pin #	Function	Pin #	Function
1	CHANNEL 2 GREEN	A	CHANNEL 2 YELLOW
2	CHANNEL 13 GREEN	B	CHANNEL 6 GREEN
3	CHANNEL 6 YELLOW	C	CHANNEL 15 GREEN
4	CHANNEL 4 GREEN	D	CHANNEL 4 YELLOW
5	CHANNEL 14 GREEN	E	CHANNEL 8 GREEN
6	CHANNEL 8 YELLOW	F	CHANNEL 16 GREEN
7	CHANNEL 5 GREEN	H	CHANNEL 5 YELLOW
8	CHANNEL 13 YELLOW	J	CHANNEL 1 GREEN
9	CHANNEL 1 YELLOW	K	CHANNEL 15 YELLOW
10	CHANNEL 7 GREEN	L	CHANNEL 7 YELLOW
11	CHANNEL 14 YELLOW	M	CHANNEL 3 GREEN
12	CHANNEL 3 YELLOW	N	CHANNEL 16 YELLOW
13	CHANNEL 9 GREEN	P	CHANNEL 17 YELLOW
14	CHANNEL 17 GREEN	R	CHANNEL 10 GREEN
15	CHANNEL 11 YELLOW	S	CHANNEL 11 GREEN
16	CHANNEL 9 YELLOW	T	CHANNEL 18 YELLOW
17	CHANNEL 18 GREEN	U	CHANNEL 10 YELLOW
18	CHANNEL 12 YELLOW	V	CHANNEL 12 GREEN
19	CHANNEL 17 RED	W	CHANNEL 18 RED
20	CHASSIS GROUND	X	UNASSIGNED
21	AC-	Y	DC GROUND
22	WATCHDOG TIMER	Z	EXTERNAL RESET
23	+24VDC	AA	+24VDC
24	[PINS 24 & 25 ARE TIED TOGETHER]	BB	STOP TIME
25	CC		UNASSIGNED
26	UNASSIGNED	DD	UNASSIGNED
27	OUTPUT SW, SIDE #3	EE	OUTPUT SW, SIDE #2 (MC Coil)
28	OUTPUT SW, SIDE #1	FF	AC+ LINE

14. Model GDI 242-J DC Isolator

Provide Model GDI 242-J DC Isolators that are in accordance with the latest version of CALTRANS Specifications as referenced earlier in this section. **Ensure that the GDI 242 isolator input signal polarity may easily be inverted without the use of tools**. Provide isolators that:

- Output is OFF for input voltages greater than 12 volts;
- Output is ON for voltages of less than 8 volts that have a duration of at least 5 to 25 ms (optional 2-7 ms);
- Minimum output pulse width is 100 ms with a valid input (can be disabled);
- Output is optically isolated open collector NPN transistor;
- Capable of sinking 50 ma when on;
- Can register a new input within 25 ms of the old signal going away; and
- Output clamped on power up and down
- Compatible with 2070 controllers and latest version of Caltrans TEES including errata

15. Model 200 Switchpack

Provide Model 200 Switchpacks that are in accordance with the latest version of CALTRANS Specifications as referenced earlier in this section.

16. Model 204 Flasher Unit

Provide Model 204 Flasher Units that are in accordance with the latest version of CALTRANS Specifications as referenced earlier in this section.

17. Flash Transfer Relay

Provide Flash Transfer Relays that are in accordance with the latest version of CALTRANS Specifications as referenced earlier in this section.

18. Model 206L Cabinet Power Supply

Provide a model 206L low power consumption cabinet power supply. The power supply should meet the following specifications:

1 Unit Chassis

The unit chassis shall be vented. The power supply cage and transformers shall be securely braced to prevent damage in transit. When resident in the PDA, the units shall be held firmly in place by its stud screws and wing nut.

2 Unit Design

The unit shall provide +24 VDC to the cabinet files. The unit shall be a Switch-Mode design. It shall conform to the following requirements:

2.1 Input Protection

Two 0.5 Ohm, 10-watt wire-wound power resistors with a 0.2 µh inductance shall be provided (one on the AC+ Line & on the AC- Line). Three 20 Joule surge arrestors shall be provided between AC+ to AC, AC+ to EG, and AC- to EG. A 0.68 _f. capacitor shall be placed between AC+ & AC- (between the resistors & arrestors).

2.2 Output Protection

The output shall be fused for over-current protection. The output shall also be protected against voltage transients by a suppressor with minimum rating of 1400 Watts.

2.3 Input and Output fuses

Input/Output fuse protection shall comply with IEC-60127.

2.4 Line and Load Regulation

Line and Load Regulation- shall not exceed +23 to + 25 VDC (4.2%) with a design voltage of +24 VDC at full load.

This includes ripple noise; from 90 to 135 VAC at 60 Hz, plus an additional 1.6% for each additional 1.0% frequency change; and current range from 1 to 5 Amperes with a maximum temperature rise of 86 ^{0}F above ambient.

2.5 Design Voltage

Design Voltage +24 ± 0.5 VDC at full load, 86 ^{0}F, 115 VAC incoming voltage.

2.6 Full Load Current

Full Load Current 5 Amperes each for +24 VDC, minimum.

2.7 Ripple Noise

Ripple Noise - 2 volts peak-to-peak and 500 mV RMS at full load.

2.8 Efficiency

Efficiency (at full load) - 80% minimum.

2.9 Power Factor Correction

TEES March 12, 2009 Page 55

The Model 206L Power Supply shall include power factor correction circuitry resulting in a minimum full load power factor of 0.96.

2.10 Circuit Capacitors

Circuit capacitors shall be rated for 40 volts minimum.

3 Front Panel and Terminals

The front panel shall include AC and DC fuses, power ON light and test points for monitoring the output voltages. The unit including terminals shall be protected to prevent accidental contact with energized parts.

3.1 LED Indicators

LED indicators shall be provided on the Front Panel indicating AC Line input status and fuse integrity. The indicators shall also display output status and fuse integrity of the 24VDC output.

19. Cabinet Model 332A

Provide Cabinet Model 332A that meets the CALTRANS Specification with the addition of surge protection as detailed in Table 925-1 Model 332A Default Input Files Assignment Detail and Table 925-2 Required Surge Arrestors for Model 332A Cabinet.

Supply Model 332A (lower input panel) cabinets, with housing Type 1B, and all components as described in these specifications.

Supply cabinets having two input files which conform to the CALTRANS Specifications and configured to accept two 2070 controllers in the top portion of the cabinet.

Configure the cabinet for dial up communications. Mount a two (2) circuit Buchanan connector on the right side panel (from rear door).

Mount a phone jack with a RJ11 connector above or to the right of the Buchanan terminal block.

Wire the phone jack to the Buchanan and to the Terminal Block (TB0) in accordance with Figure 925-1.

A manual jack shall be installed on the police panel. The jack shall inter-mate with a three circuit 1/4 inch (6.35 mm) diameter phone plug. The tip and ring (middle) circuits of the jack shall-be connected to the logic ground and the interval advance inputs of controller unit. When the manual hand cord is plugged into the jack and the pushbutton is pressed, logic ground shall be connected to the interval advance input of the controller unit.

A manual pushbutton with cord shall be provided. The cord shall have a minimum length of 3 feet (0.9 m). It shall have a 1/4 inch (6.35 mm) diameter, three circuit plug connected to one end and a manual pushbutton enclosed in a hand held enclosure at the other end. A complete cycle (push-release) of the manual pushbutton shall terminate the controller unit interval which is active except the vehicular yellow and all red clearance intervals. Cycling the push-button during the vehicular yellow or all red clearance intervals shall not terminate the timing of those intervals.

Supply cabinets with a 12” x 16” x 1” Air Filter

19. Cabinet Model 332A with Auxiliary Output File)

Ensure that this unit meets the requirements of Subsection 925.2.03.A.19 above, except that the cabinet is configured with an Auxiliary Output File. Additionally, the field wiring terminals may be mounted on the rear of the input file.

B. Fabrication

Refer to Subsection 925.2.06.A.1 for controller cabinet minimum fabrication specifications.

C. Acceptance

Refer to Subsection 925.2.01.A for compliance with CALTRANS QPL.

D. Materials Warranty

Refer Subsection 925.2.D for Materials Warranties.

Table 925 – 1 Model 332 Default Input Files Assignment Detail																
Upper Input File (I)	***Slot***		*1*	*2*	*3*	*4*	*5*	*6*	*7*	*8*	*9*	*10*	*11*	*12*	*13*	*14*
	Type		*Det*	*Det*	*Det*	*Det*	*Det*	*Det*	*Det*	*Det*	*Det*			*DC*	*DC*	*DC*
	Channel 1	*C1 Pin*	56	39	63	47	58	41	65	49	60		80	67	68	81
		Function	☐1	☐2	☐2	☐2 CALL	☐3	☐4	☐4	☐4 CALL	☐1		INTERVAL ADVANCE	☐2 PED	☐6 PED	FLASH
		Field Term	TB-2 1,2	TB-2 5,6	TB-2 9,10	TB-4 1,2	TB-4 5,6	TB-4 9,10	TB-6 1,2	TB-6 5,6	TB- 6 9,10		NC	TB-8 4,6	TB-8 7,9	NC
	Channel 2	*C1 Pin*	56	43	76	47	58	45	78	49	62		53	69	70	82
		Function	☐1	☐2	☐2	☐2 CALL	☐3	☐4	☐4	☐4 CALL	☐3		MCE	☐4 PED	☐8 PED	STOP TIME
		Field Term	TB-2 3,4	TB-2 7,8	TB-2 11,12	TB-4 3,4	TB-4 7,8	TB-4 11,12	TB-6 3,4	TB-6 7,8	TB-6 11,12		NC	TB-8 5,6	TB-8 8,9	NC
Lower Input File (J)	***Slot***		*1*	*2*	*3*	*4*	*5*	*6*	*7*	*8*	*9*	*10*	*11*	*12*	*13*	*14*
	Type		*Det*	*Det*	*Det*	*Det*	*Det*	*Det*	*Det*	*Det*	*Det*			*TBA*	*TBA*	*DC*
	Channel 1	*C1 Pin*	55	40	64	48	57	42	66	50	59		54	71	72	51
		Function	☐5	☐6	☐6	☐6 CALL	☐7	☐8	☐8	☐8 CALL	☐5			EVA	EVB	R/R
		Field Term	TB-3 1,2	TB-3 5,6	TB-3 9,10	TB-5 1,2	TB-5 5,6	TB-5 9,10	TB-7 1,2	TB-7 5,6	TB- 7 9,10			TB-9 4,6	TB-9 7,9	TB- 9 10,12
	Channel 2	*C1 Pin*	55	44	77	48	57	46	79	50	61		75	73	74	52
		Function	☐5	☐6	☐6	☐6 CALL	☐7	☐8	☐8	☐8 CALL	☐7			EVC	EVD	
		Field Term	TB-3 3,4	TB-3 7,8	TB-3 11,12	TB-5 3,4	TB-5 7,8	TB-5 11,12	TB-7 3,4	TB-7 7,8	TB-7 11,12			TB-9 5,6	TB-9 8,9	TB- 9 11,12

Table 925-2 Required Surge Arrestors for Model 332 Cabinet		
Field Terminal Block	*Terminals*	*Required Arrestor*
TB-8	1-12	EDCO PC642C-030 plug in arrestors in PCB1B Terminal Block
TB-9	10-12	EDCO PC642C-030 plug in arrestors in PCB1B Terminal Block
TB-9	4-9	EDCO PCB1B Terminal Block only
TB-2, TB-3, TB-4, TB-5, TB-6, TB-7	1-12	EDCO SRA-6LB

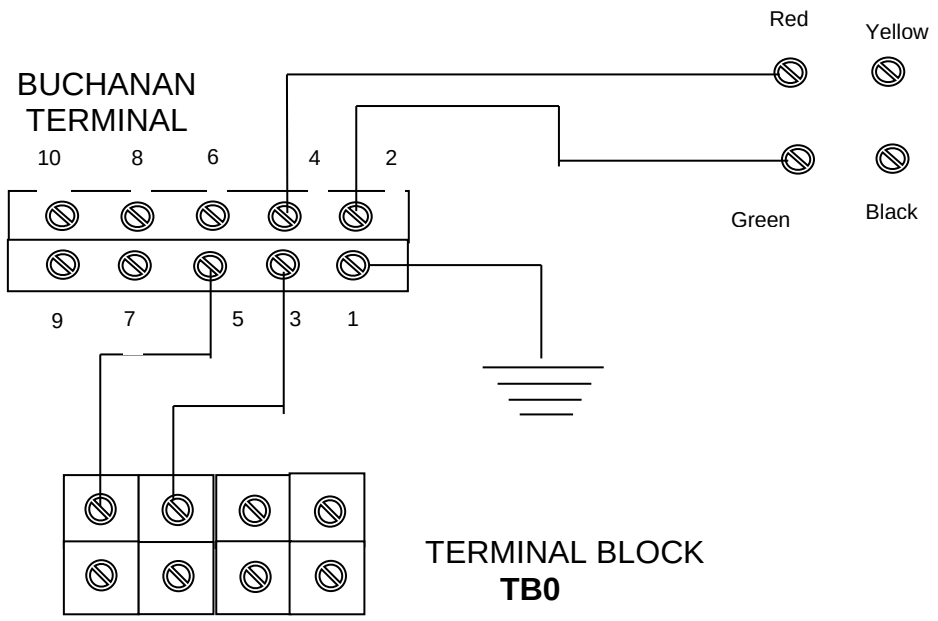

Note: For a typical signal installation, the Model 332 cabinet is the design standard.

Figure 925-1—Wiring Diagram for Dial-up Communications

Flashing Beacon Assembly

A. Requirements

This specification is for a flashing signal cabinet, which consists of an aluminum cabinet containing a flasher assembly, Field connection terminal block, surge arrestor and circuit breaker wired in a manner to operate flashing beacons. Refer to Figure 925-12.

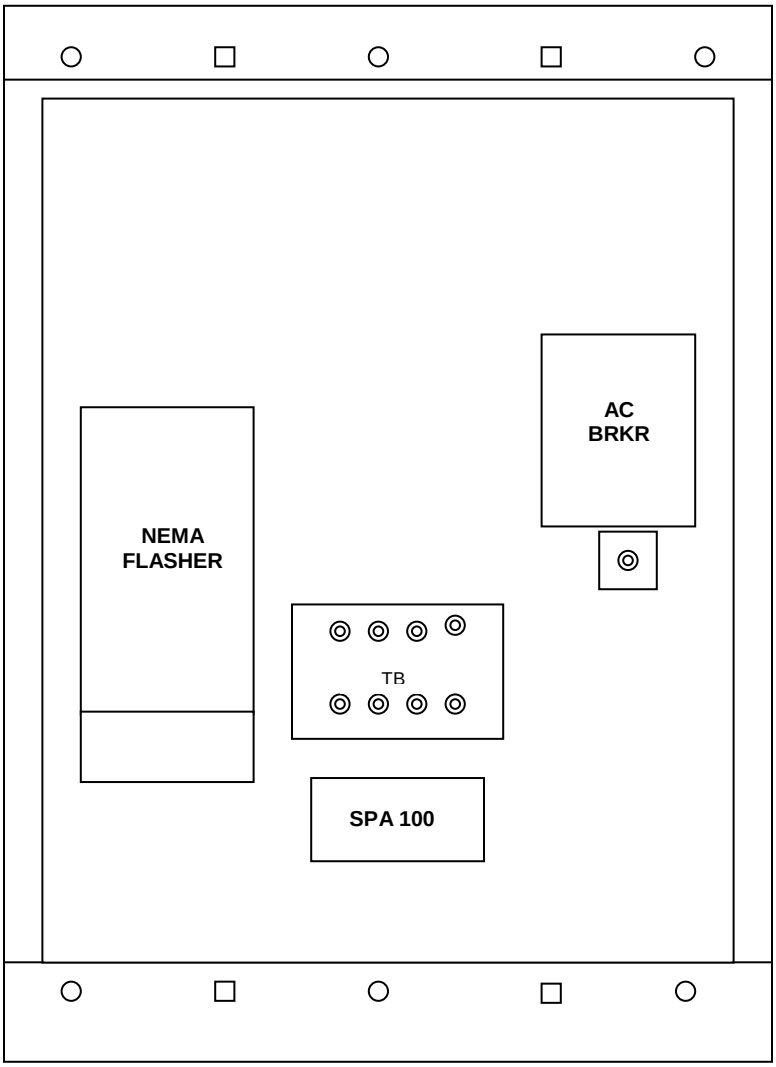

Note: Front view of cabinet Door Assembly not shown
No scale
Figure 925-12—Typical Flashing Signal Cabinet Layout

1. Cabinet

Supply a NEMA Type 3R cabinet assembly, manufactured of aluminum with a minimum thickness of 0.125 inches (3 mm).

Ensure that the cabinet exterior has a smooth, uniform “bare” aluminum finish with all joints between adjoining cabinet components (sides and bottom) continuously welded on the outside to prevent the intrusion of moisture and dust.

Ensure that all welds are free of cracks, blow holes and other irregularities.

Supply a cabinet with the following exterior dimensions:

	Minimum	Maximum
Height	16 inches	18 inches
Width	12 inches	14 inches
Depth	7 inches	10 inches

Use a cabinet door that is double flanged on all four sides to prevent the entry of dirt and liquids when the door is open.

Install a one-piece gasket formed around the door opening to insure a weather tight seal when the door is secured.

Attach the door to the cabinet housing by a continuous tamper proof hinge.

Equip each cabinet with a Corbin #2 lock and one key. Police panel type locks are not acceptable.

Install an aluminum back panel in the cabinet, mounted on standoffs, to facilitate mounting of internal components.

Install exterior aluminum mounting brackets, which extend a minimum of 1.75 inches (44 mm) and a maximum of 2.5 inches (63 mm) from the top and bottom of the cabinet.

Use brackets that extend across the full width of the cabinet back on the top and bottom.

Provide these brackets with holes for mounting to a flat surface with screws and vertical slots for banding to steel, concrete or wooden signal poles.

2. Flasher Unit

Supply a standard plug in two circuits NEMA flasher.

Ensure that the flasher is of all solid state construction, meets the requirements of the NEMA standards and is rated at a minimum of 10 A per circuit.

Ensure that the flasher utilizes zero voltage turn-on and turn-off current and is capable of dimming outputs.

3. Surge Arrestor

Supply a flasher cabinet that incorporates an AC surge arrestor (EDCO SPA-100 or equivalent) to protect the internal components from lighting and over voltages on the AC service input.

The requirements for the surge arrestor are:

Peak Surge Current	15000 A
Peak Surge Voltage @ 10KA	680 V
Energy Handling	220 J
Power Dissipation Rate	1.5 W maximum
Continuous AC Voltage	130 V AC RMS
Initial Breakdown (1mA)	212 V
Typical Capacitance	4000 pF

Operating Temp. -40 ºF to 185 ºF (-40 ºC to 85 ºC)

4. Circuit Breaker

Include a 15 A circuit breaker in the cabinet. (Square D QOU 115 Series or equivalent).

5. Terminal Block

Include a four position terminal block in the cabinet for making field connections. Properly label all field terminal connections.

6. Construction

Assemble the flasher assembly, terminal block, surge arrestor and circuit breaker in the cabinet as shown on the attached drawing.

Wire all components together as a working unit, thus requiring only field connections to and from the AC power and flashing beacons.

B. Fabrication

Refer to Subsection 925.2.05.A.1 for controller cabinet minimum fabrication specifications.

C. Acceptance

General Provisions 101 through 150.

D. Materials Warranty

Refer to Subsection 925.2.D for Materials Warranties.

Flashing Signal Cabinet with Time Clock

1.0 Definition

1.1 The intent of this specification is to outline the minimum acceptable design requirements for a flasher cabinet assembly wired for a time switch to include a two (2) circuit NEMA flasher and lightning protection. Each flasher assembly will be used to operate a school zone warning device. The requirements for a solid state time switch are outlined in the attached specifications.

2.0 Flasher

2.1 The flasher cabinet shall include a plug-in two (2) circuit NEMA flasher and base. The flasher shall be of all solid state construction and shall be rated at a minimum of 10.0 Amps per circuit. The flasher shall utilize zero-voltage turn-on and turn-off of current thus eliminating electromagnetic interference.

3.0 Lightning and Surge Protection

3.1 The flasher cabinet shall incorporate a medium duty AC service arrestor to protect the receiver-decoder and associated equipment from harmful voltage surges caused by lightning or the power company.

3.2 The arrestor shall be of solid state construction and shall comply with the following specifications:

Repetitive Peak Surge Current:	15000 Amps
Peak Surge Voltage (at 10KA):	680 Volts
Energy Handling:	220 Joules
Power Dissipation Rate:	15 Watts Max.

Continuous AC Voltage:	150 VAC RMS
Peak Voltage (1ma):	212 Volts
Typical Capacitance:	4000 Picofarads
Operation Temperature:	-40 to +85C

3.3 The arrestor shall be installed using studs and shall be easily replaceable from the front of the cabinet assembly with the use of simple tools.

4.0 Circuit Breaker

4.1 A ten (10) Amp circuit breaker (15 Amp option) shall be mounted and wired into the cabinet. The breaker shall be the Square "D" QOU 115 Series or equivalent.

5.0 Field Terminal Block

5.1 A barrier type terminal block shall be used to terminate all wires. The terminal block shall have at least eight (8) positions to terminate the following functions:

1. Normally open contact of the time clock relay.
2. Common contact of the time clock relay.
3. Normally closed contact of the time clock relay.
4. Neutral for load-1.
5. Neutral for load-2.
6. Load-1 from the flasher.
7. Load-2 from the flasher.
8. AC-.

All of the above functions shall be clearly marked on the panel adjacent to the terminal block by either etching or a silk screen process.

6.0 Power Transfer Relay

6.1 The flasher shall be equipped with a power transfer relay. The coil side of the relay shall be wired to the output of the time switch. The contacts of the relay shall apply power to the NEMA flasher. The power relay shall have contacts rated at 30 Amps and shall be Magnecraft Model 21ACPX-9 or approved equal.

7.0 Cabinet

7.1 The flasher assembly shall be housed in a cabinet fabricated of .125 inch sheet aluminum. The cabinet shall be weatherproof using a neoprene gasket and shall be supplied with a standard #2 lock and key. The cabinet shall be vented. The outside dimensions of the cabinet shall be minimum of 14"h x 14"w x 11"d. The outside of the cabinet shall be the natural aluminum finish.

7.2 Field wiring shall be accommodated by a copper connector capable of terminating wire sizes ranging from # 6 to # 14 AWG. The wire connectors shall be ILSCO model XT-6 or approved equal.

8.0 Warranty

8.1 Each flasher cabinet assembly shall be warranted to be free of defects in material and workmanship for a period of one year from installation or fifteen (15) months from the date of shipment from the factory, whichever occurs first.

8.2 Any warranty service required shall be promptly performed at the manufacturer's facility or the manufacturer's authorized service agency. The purchaser will pay transportation costs to such service point, and the manufacturer will pay those costs to return the unit by normal surface transportation means.

Note: Front view of cabinet Door Assembly not shown

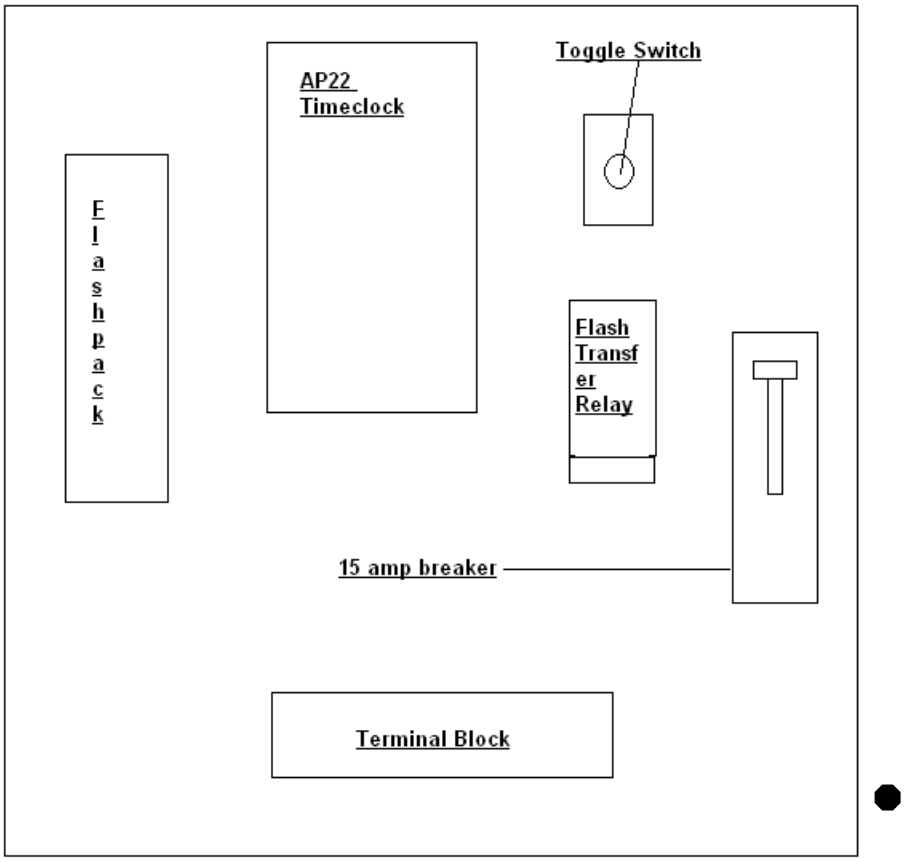

No scale

Typical Flashing Cabinet with Time Clock Cabinet Layout

8.3 **Construction**

Wire all components together as a working unit, thus requiring only field connections of the AC power and flashing beacons.

Time Clock

A. Requirements

Supply time clock that is two circuit, calendar programmable, solid state time switch.It is used for switching electric circuits according to a pre-set time and date program. It has the ability to run up to (10) different day plans, and (36) different annual exception plans to accommodate different school calendars and/or traffic patterns throughout the year. (RTC AP 22 or approved equivalent) that meet the following specifications:

1. Display = 2-line, 16 characters per line Liquid Crystal Display (LCD)
2. Keyboard = 16 Key, Positive Action Push Button.
3. Back-up Power = Non- Volatile memory
4. Electrical Connection = CPC connector with harness.
5. Output = Two (2) SPDT Relays Rated at 15 Amps , 12VDC or 115 VAC Resistive Load.
6. Input Voltages = 95 to 135 VAC, 60 Hz, 10.5 to 14 VDC.
7. Power = Less than 6 Watts.
8. Time Base = AC Power = 60 Hz power line, DC Power = Temperature Compensated Crystal w/accuracy of .35 seconds/day.
9. Size = 10 3/8”h x 4 ¾”w x 2” d.
10. Temperature Ranges = -30 to + 74 Degrees C.
11. Must be able to program from switch to switch.
12. Must be able to communicate Via Wireless Communication, Serially, and IP addressable.
13. Minimum twenty-four (24) hour capacitive back up. Battery back up is not acceptable.
14. Keypad entry programming should be possible with the use of external devices such as a PC running provided RTC software, external programming unit, another time switch, etc..
15. A programming manual is to be included with each unit.
16. Programming the unit should consist of the following steps:

a. Add a group

b. Add the program steps for the normal day plan.

c. Add a day plan name.

d. Copy and paste time plans as needed.

e. Setup default week plans.

f. Finally setup any holidays or vacation plans.

B. Fabrication

General Provisions 101 through 150.

C. Acceptance

General Provisions 101 through 150.

D. Materials Warranty

Refer to Subsection 925.2.D for Materials Warranties.

Cabinet assemblies shall be mounted on galvanized rolled steel mast arm poles similar in construction to those utilized for traffic signal construction. All construction guidelines will follow standards currently used in Georgia Dept. of Transportations design criteria regarding foundations and installation guidelines. Cabinets and Meterbases will be mounted at a height no higher than 60” from the ground. All installations shall be capable of remote radio programming from a remote Traffic Control Center within Douglas County. All equipment shall be compatible with software provided by RTC.

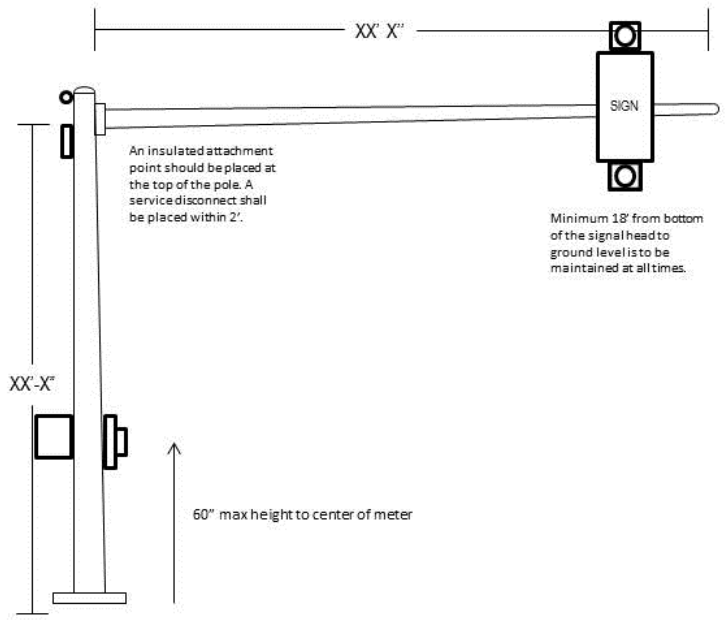

Alternate fluted poles are acceptable to avoid code violations. See drawing below.

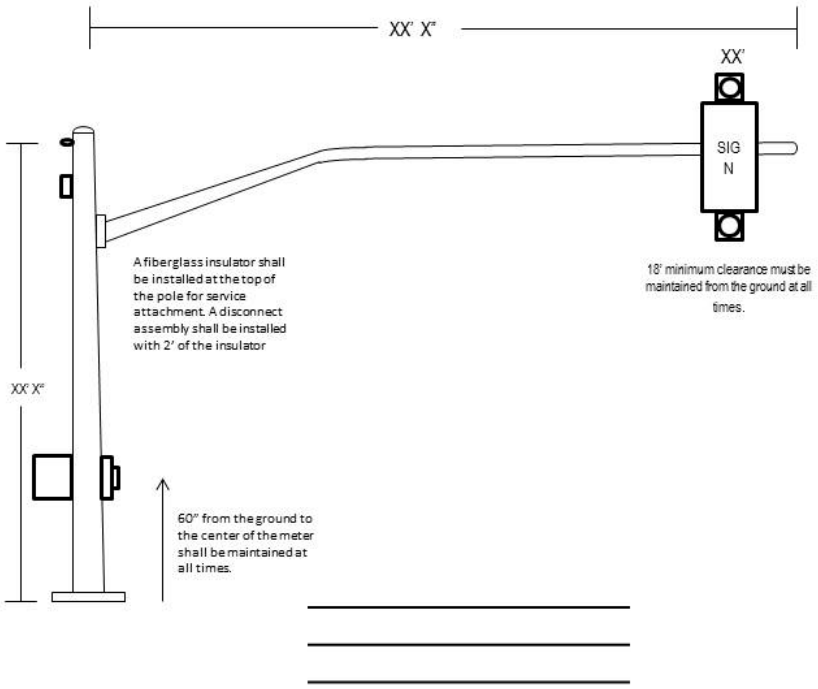

SECTION 2

Uninterruptible Power System for Traffic Signal Applications

This specification shall be for a true-on-line, power conditioner and uninterruptible power system (UPS) with battery backup capability designed for transportation and traffic applications. The UPS shall be a totally microprocessor controlled and software driven power system. The inverter shall be in operation at all times supplying clean regulated power (both voltage and frequency) to all loads, at all times. The UPS system must be fully power factor corrected and fully functional with any type of auxiliary power generator. The UPS system shall be furnished and installed in conformance with the following specification.

System Example:

Clary SP1000SN+ – Uninterruptible Power System
PIM30G – Power Interface Module
OPB100 – Battery Cable
OP72C – Battery Set

336 Type or External Cabinet to mount to side of a 332 cabinet with circuit breaker, generator connection, suppression, and led indication. (As needed) The external cabinet shall be a NEMA 3R rated cabinet with the following dimensions – 12 inches deep, 56 inches high, and 26 inches wide.

1.0 Operation

A. The UPS shall be capable of producing – simultaneously – fully regenerated and regulated, conditioned and true sinewave power with continuous and hot standby AC output capability.

B. The UPS's inverter shall be on at all times to produce continuous, clean, regulated power to all loads. The inverter shall have a minimum operating efficiency of 92%. The continuous power output shall be provided for signals, controllers and modems, etc.; standby output can also be provided for signals if so required. Up to the maximum load rating, the UPS shall be capable of supplying power to any combination of signal heads, whether Incandescent, LED or Neon, by any manufacturer, regardless of power factor, without overdriving the LED heads which may cause early degradation, low luminosity or early signal failure. Also, a programmable digital delay timer is included for short-term battery run under full cycling operation.

C. Upon loss of utility power the UPS shall utilize battery power in support of the system via a supplied Power Interface Module (PIM). In the normal operation, the UPS shall be operated in the real-time true on-line mode with the inverter supplying power to all cabinet loads, at all times. In addition, the UPS can be operated in hot standby mode with power transfer being accomplished in 100 msec. or less, if required. In the event of UPS failure and/or battery depletion, the PIM will ensure that the UPS will drop out and, upon return of utility power; the traffic control system will default to normal operating mode.

D. The Power Interface Module shall enable removal and replacement of the UPS without shutting down the traffic control system (i.e. "hot swap" capability). Connectors shall be equipped with a "safety interlock" feature.

E. For 170 type cabinets, upon loss of power the UPS shall actuate the existing Flash Transfer Relays (FTRs) and Mercury Contractor (MC) to force the traffic control system into Flash Mode operation.

F. Existing Flasher Modules and Flash Transfer Relays shall be utilized.

G. To facilitate emergency crews and police activities, the UPS shall be fully compatible with police panel functions (i.e. "Signals OFF" switch must kill power to the field wiring even when on UPS/Battery power).

H. The UPS shall not duplicate or take over flash operation or flash transfer relay functions.

I. The Traffic UPS shall be capable of providing continuous, fully conditioned, regulated, pure sinusoidal (AC) power to all connected devices such as signal controllers, modems, communications hubs, NTCIP adapters and video equipment at all times.

J. The UPS shall be NTCIP capable with optional standard adapter.

K. The UPS shall contain two external serial ports located on the front panel (rear panel for 170 applications) of the UPS. The Signal serial port shall provide the user the option to select alarm output functions. These functions shall be open collector type

contact closures that the user can assign as signal utility interrupt, low battery and inverter active conditions or utility fail indicate. These signals shall be capable of being interfaced to any manufacturer's controller auxiliary alarm inputs or the Power Interface Module (PIM). The RS232 Signal port provides an intelligent interface for connection to optional software systems for monitoring and control, including internet connections.

L. The UPS shall be fully power factor corrected under all operating conditions.

M. Each UPS shall be provided with a CD ROM containing Windows based configuration software.

2.0 Description

The UPS shall consist of three major components, the Electronics Module with a detachable Power Interface Module, and the Battery System.

2.1 The Electronics Module shall consist of the following:

A. True on line, double conversion, pure sinewave, high frequency inverter utilizing IGBT technology
B. 3-stage, temperature compensated, battery charger
C. Digital microprocessor based timer for programmable flash command requirements
D. For connection from the Electronics Module to the Power Interface Module and Battery System, dedicated harnesses shall be provided with quick-release, keyed, circular connectors and braided nylon sleeving over all conductors,
E. Local individual LED indicators for AC input, inverter, summary alarm, UPS output, battery status, load levels, with LCD panels for battery run time, and event counters.
F. Local and remote communications capabilities,
G. A detachable Power Interface Module for inserting power safety and reliably,
H. And be capable of accepting an NTCIP-ready adapter or a Spread Spectrum Radio modem.
I. Two separate DB9F connectors for remote signal alarms and true RS232 monitoring and remote communications.

2.2 Mounting/Configuration -Shall be of Universal Design.

2.2.1 NEMA Style: mounting method shall be shelf-mount or wall-mount.

2.2.2 170 Style: mounting method shall be 19" rack-mount.

2.3 Power Interface Module (PIM)

2.4 A PIM shall be required to safely insert utility power into the UPS system

2.5 The PIM shall contain a terminal strip for input and output power connections in addition to neutral and ground connections. In addition, the terminal strip shall also include open collector (relay type) connections for: on battery, low battery and digital flash timer. .

2.5.1 The PIM shall include two serial ports with connection to the digital timer. When the serial port on the UPS is connected to the signal serial port on the PIM, loss of utility power shall activate the digital timer. The digital timer shall switch the signal operation from full colors to flash based on flash trigger values

2.5.2 The signal serial port on the PIM can be used to send open collector type contact closures that the user can assign as signal utility interrupt, low battery and inverter active conditions to the signal controller auxiliary alarm inputs.

2.5.3 Optional PIM models shall be available for connection to auxiliary power generators and to provide a GFI outlet.

2.6 Battery System

2.6.1 The battery shall be comprised of extreme temperature, deep cycle, AGM/VRLA (Absorbed Glass Mat/Valve Regulated Lead Acid) batteries that have been field proven and tested by the U.S. military.

2.6.2 The battery system shall consist of a single string of 6 (1250VA) or 8 (2000VA) batteries of extreme temperature, deep cycle, AGM/VRLA type (Absorbed Glass Mat/Valve Regulated Lead Acid) batteries.

2.6.3 Batteries shall be certified to operate at extreme temperatures (from -40°C to +74°C) and shall not require aid of any external devices to cool or heat the batteries.

2.6.4 The batteries shall be provided with keyed interconnect wiring harness. This harness shall connect the battery pack to the UPS module. The harness shall be a minimum of 5 feet in length.

2.6.5 The interconnect cable shall be protected with abrasion-resistant nylon sheathing.

2.6.6 The interconnect cable shall connect to the base module via a quick-release circular connector.

2.6.7 For purposes of safety and proper operation, the circular battery connector shall have interlocking pins to prevent turn-on if batteries are not connected, and to shut off the UPS should the batteries be disconnected.

2.6.8 Battery construction shall include heavy-duty, inter-cell connections for low-impedance between cells, and heavy-duty plates to withstand shock and vibration.

2.6.9 The top cover shall use tongue and groove construction and shall be epoxied to the battery case for maximum strength and durability.

2.6.10 An optional external, stand-alone pad, or pole mounted, outdoor enclosure shall be available should there be inadequate room in the signal cabinet or should the consulting/traffic engineer prefer independent, external mounting. The external cabinet shall be a 336 170 style cabinet with EIA rack, light, fan, and vents with front and back door.

3.0 Electrical Specifications

3.1 Input Voltage

Nominal Input Voltage	120 VAC, Single Phase
DC Battery Buss	72VDC-1250VA or 96VDC-2000VA
Input Voltage Range	85 VAC to 140 VAC
Input Frequency	50 or 60 Hz (+/-5%)
Input Configuration	3 Wire (Hot, Neutral & Ground)
Input Current (Max. draw)	7.2 amps, PFC-1250VA or 14.6 amps, PFC-2000VA
Input Protection	Input Fuse (20 amps)

3.1 Output Specification

Nominal Output Voltage	120 VAC, Single Phase
Power Rating	1250VA/825W with (10 sec) 2000VA/1400W.
Output Voltage Regulation	+/-2% for 100% step load change and from High battery to Low battery condition
Output Frequency	50 or 60 Hz (+/-5%)
Output Configuration	Keyed, circular connectors and duplex receptacle
Output Wave Form	True Sinewave
Overload capability	110% for 10 minutes 200% for ½ second

Fault clearing	Current limit and automatic shutdown
Short circuit protection	Current limit and automatic shutdown
Efficiency	92% at full load
Load Power Factor	.7 lagging through unity to .7 leading

4.0 Physical Specifications

UPS Electronics Module shall be no greater than:
Rack-mount: Width = 19", Depth = 13", Height = 3.5" (2U)
Shelf-mount: Width = 19", Depth = 13", Height = 3.5"
Wall-mount: Width = 19", Depth – 13", Height = 3.5"
Detachable Power-Interface Module = Width = 6", Depth = 2.8", Height = 9"
Weight: UPS: 20 lbs. or less, Shipping weight: 25 lbs. or less

5.0 Environmental Specification

5.1 The UPS system, including batteries, shall meet or exceed NEMA temperature standards from -40° C to +74° C.

5.2 The UPS system, including batteries, shall be certified and field proven to meet or exceed NEMA temperature standards. A certificate of compliance, from a independent testing facility, shall be made available upon request.

6.0 Battery Specifications

6.1 The battery system shall be certified and field proven to meet or exceed NEMA temperature standards from –40° C to +74° C.

6.2 Batteries shall be the 41 Ampere-Hour rating type.

6.3 Batteries shall meet MIL SPEC B-8565J for hydrogen gas emissions.

7.0 Communication, Controls and Diagnostics

7.1 Alarm function monitoring through the UPS shall be through a standard DB-9F connector with open collectors (40V@20mA) indicating:
a) Loss of utility power
b) Inverter failure
c) Low battery

7.2 An RS232 interface shall be provided via a DB-9F connector to allow full interactive remote computer monitoring and control of the UPS functions.

7.3 Front panel controls shall consist of no less than: Power On, Cold (DC) Start, Alarm Silence, Battery Test, Bypass Breaker, and DC/Battery Breaker.

8.0 Reliability

8.1 Calculated MTBF is 100,000 hours based on component ratings.

8.2 When Bypass and Power Interface Module are included, system MTBF increases to 150,000 hours.

9.0 Options

9.1 UPS-Link, Internally mounted STMP/NTCIP adapter

9.2 Extended run times via additional batteries

9.3 Battery tray for 170 type cabinets, to hold a maximum of 4 batteries and mounts on RETMA rails.

9.4 Swing-out battery box, capable of being mounted on right inside rail behind back door of 170 type cabinets. Box to hold a maximum of 6 batteries.

9.5 Service pedestal or cabinet mount.

9.6 High rate battery charger for accelerated charging capacity for multiple battery strings.

10.0 External UPS Cabinet

The External UPS Cabinet shall be a NEMA 3R rated cabinet mounted to the side of the Model 332 Cabinet (see Figure 925- 8 for details). This external UPS cabinet shall conform to TEES, August 16, 2002 Chapter 7, Section 2-Housings for the construction and finish of the cabinet. The specific finish of the external UPS cabinet shall be anodic as per TEES 7.2.2.3.1. Anti-Graffiti paint shall not be used.

Figure 925- 8 External UPS Cabinet

External UPS Cabinet

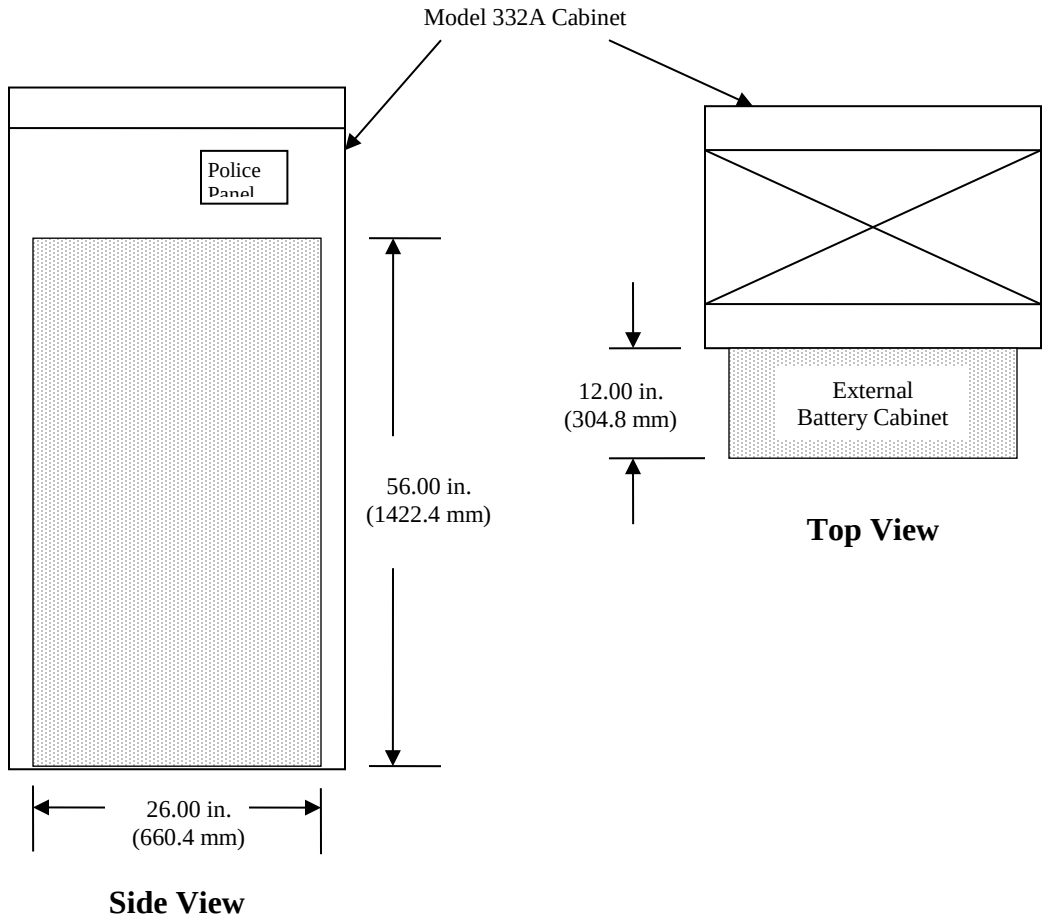

10.1 The external cabinet shall mount to the Model 332 Cabinet with a minimum of eight bolts. Figure 925- 8 shows the typical mounting location of the external cabinet.

10.2 The specific dimensions and details of the external UPS cabinet shall be as shown in Figure 925 – 9 through 925 – 11.

10.3 Four shelves shall be provided. There shall be a minimum of 304.8mm (12”) clearance between shelves. Each shelf shall be a minimum of 263.65mm (10.38”) X 635.0mm (25”), and capable of supporting a minimum of 57kg (125 lbs.). Shelf edges shall be turned down on all four sides for support and to provide a flat top surface. Shelves shall be predrilled with EIA rail mounting holes.

10.4 The bottom shelf shall be removable.

10.5 The external UPS cabinet shall be ventilated through the use of louvered vents, filter, and one thermostatically controlled fan as per TEES Chapter 7 Section 2-Housings.

10.6 External UPS cabinet fan shall be AC operated from the same line output of the Manual Bypass Switch that supplies power to the 332 Cabinet. A 2-position

terminal block shall be provided on the fan panel, along with 3 meters of connected hookup wire.

10.7 The door shall be attached to the cabinet through the use of either a continuous stainless steel piano hinge or four, two-bolts per leaf, hinges as per TEES Chapter 7 Section 2. The door shall use a padlock clasp or latch and lock mechanisms as described in the TEES, in order to lock the door.

10.8 The external UPS cabinet shall come provided with all bolts, washers, nuts and cabinet-cabinet coupler fittings provided, necessary for mounting the external UPS cabinet to the 332A Cabinet.

Figure 925 – 9 External UPS Cabinet Details

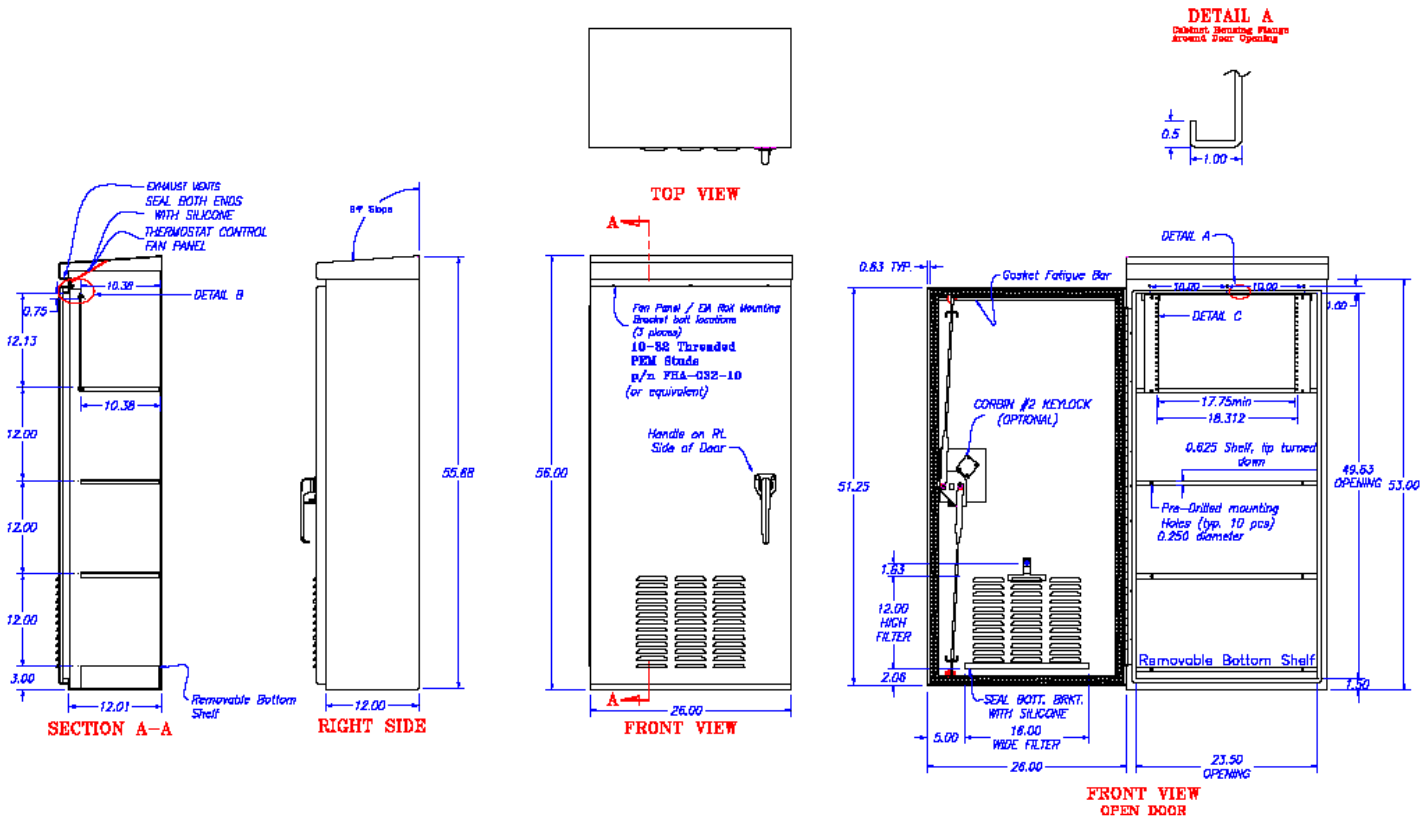

10.9 Fasteners shall meet the following requirements:

- (Total of 8 bolts per cabinet with 2 flat washers per bolt and 1 K-lock nut per bolt)
- Cabinet mounting bolts shall be:
- 18-8 Stainless Steel Hex Head (Fully Threaded)
- 3/8” – 16 X 1”

- Washers shall be:
- Designed for 3/8” bolt
- 18-8 Stainless Steel 1” OD round flat type
- K-lock washer shall be:
- 18-8 Stainless Steel, Hex Nut Assembled with Free-Spinning Tooth Washer
- 3/8” – 16 Screw size

10.10 External UPS Cabinet to 332A Cabinet couplings shall provide a conduit for power connections between the 332A Cabinet and External UPS Cabinet. The couplings shall consist of three parts and meet the following requirements:

- 2” Nylon Insulated, Steel Chase Nipple, T & B 1947 or equivalent
- 2” Sealing, Steel Locknut, T & B 146SL or equivalent
- 2” Nylon Insulated, Steel Bushing, T & B 1227 or equivalent

10.11 Two EIA angle rails, per Detail C, Figure 925 – 10, along with all necessary mounting hardware (4 sets of 10-32 bolts and nuts with captive washers) shall be provided with the external cabinet (not installed). Rails shall be symmetric to allow for installation on either right or left sides of the cabinet. Mounting holes and bracket shall allow for EIA rail installation at any location in the external cabinet. The EIA mounting angle nominal thickness shall be either 0.1345 inch (3.4163mm) plated steel or 0.105 inch (2.667mm) stainless steel.

Figure 925 – 10 EIA Rail for Mounting Inverter or PTR inside External UPS Cabinet

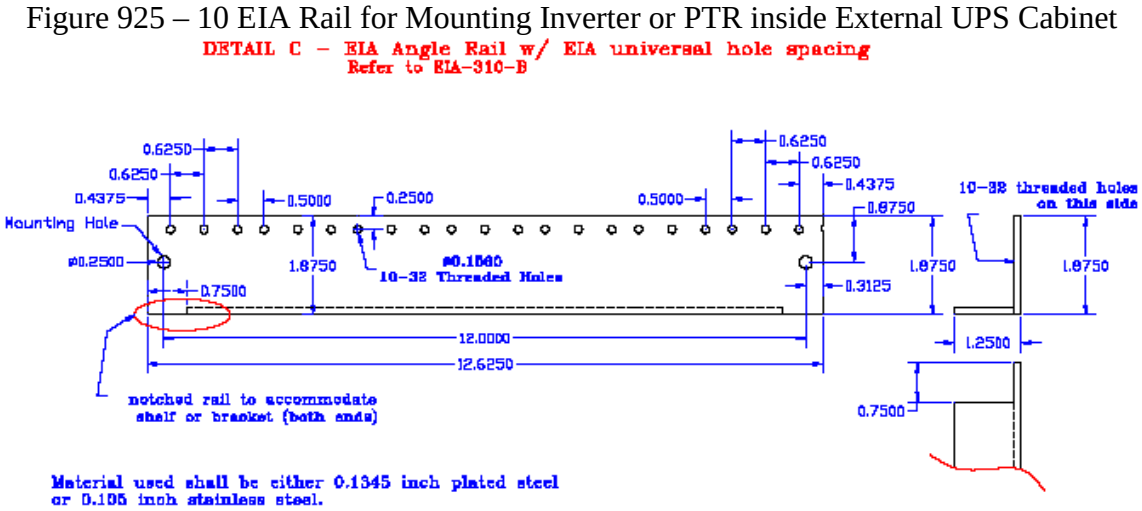

10.12 EIA rail mounting bracket shall be of continuous, one-piece design bolted into the cabinet to provide adequate support for rail-mounted equipment. See Figure 925 – 11.

10.13 Pressed in, flush-head threaded screw posts shall be inserted into the front face of the cabinet enclosure top sill. These threaded posts shall be used to mount both the fan panel and the EIA rail-mounting bracket. The screw posts shall be #10-32 thread size PEM Stud, part number FHA-032-10 or equivalent. Refer to Figure 925 – 9, front views for mounting detail.

Figure 925 – 11 EIA Rail Mounting Bracket for Mounting EIA Rails inside External UPS Cabinet

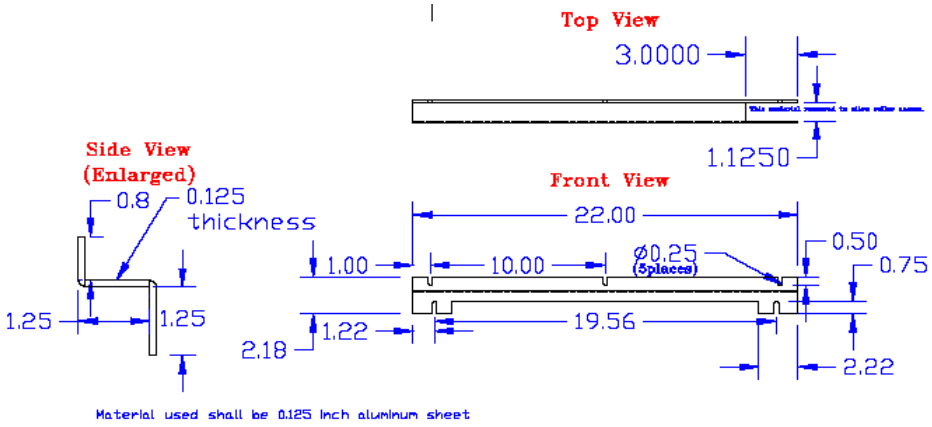

11.0 Serviceability & Maintainability

11.1 MTTR (Mean-Time-To-Replace or Repair)

11.1.1 Electronics: 15 minutes or less

11.1.2 Battery System: 15 minutes or less

12.0 Warranty

Standard warranty terms cover entire UPS including battery. Terms are two-year parts and labor F.O.B. factory.

Section 3

Battery Backup System

925.2.06 Battery Backup System

A. Requirements

This specification is for establishing the minimum requirements for a complete emergency battery backup system for use with Light Emitting Diode Traffic Signal Modules at intersections with 332 cabinets. The Battery Backup System (BBS) shall include, but not be limited to the following: Inverter/Charger, Power Transfer Relay, Batteries, a separate manually operated non-electric Bypass Switch and all necessary hardware and interconnect wiring. The BBS shall be capable of providing power for full run-time operation for an "LED –only" intersection (all colors: red, yellow, green and pedestrian heads) or flashing mode operation and intersection Red LED's. The BBS shall be designed for outdoor applications, in accordance with the CALTRANS TEES.

Figure 925-4 Battery Backup Block Diagram

Battery Back Up System (BBS) Block Diagram

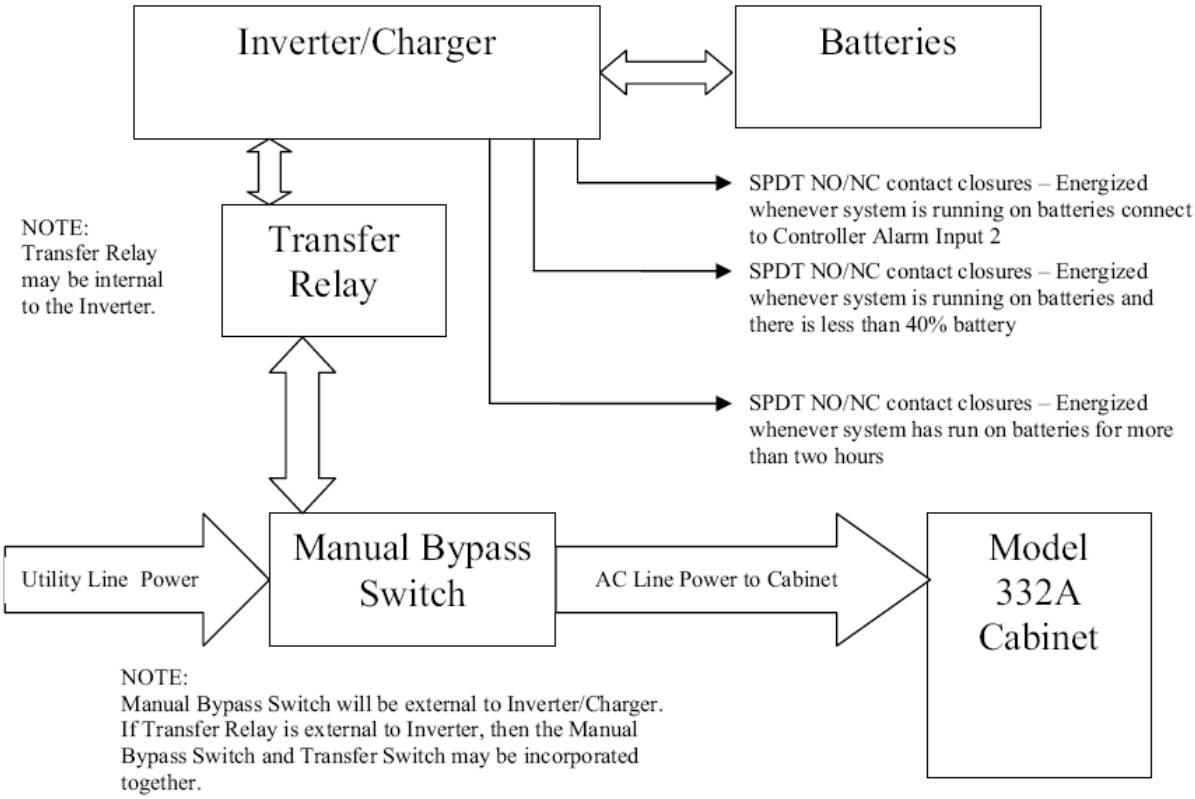

1. Operation:
   a. The BBS shall provide a minimum two (2) hours of full run-time operation for an "LED-only" intersection (minimum 700W/1000VA active output capacity, with 80% minimum inverter efficiency).
   b. The maximum transfer time allowed, from disruption of normal utility line voltage to stabilized inverter line voltage from batteries, shall be 65 milliseconds. The same maximum allowable transfer time shall also apply when switching from inverter line voltage to utility line voltage.
   c. The BBS shall include a Manual Bypass Switch which provides capability to transfer the power service to disable the BBS and operate only from the power service provided. The Manual Bypass Switch shall be as shown in Figure 925-5.

Figure 925 – 5 Manual Bypass Switch (Shown in normal BBS Mode)

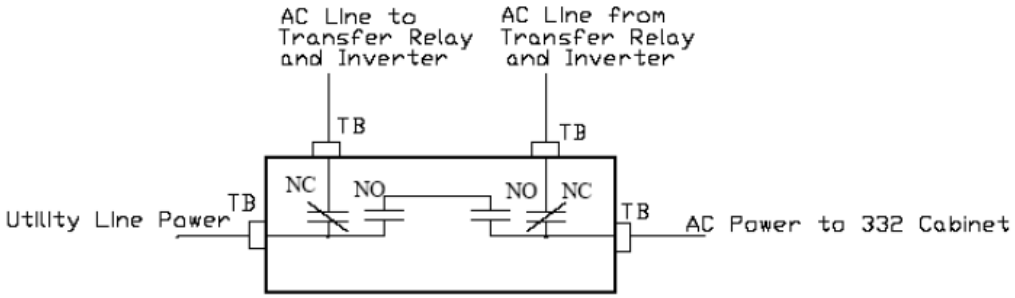

Notes:
1. TB - #8 Terminal Blocks
2. NO - Normally Open
3. NC - Normally Closed
4. NO/NC contacts shall all toggle simultaneously with one single manually operated switch.
5. Manual Bypass Switch shall only switch line. Neutral and Equipment Ground are not switched and shall be connected to 332 Cabinet buses.

d. The BBS shall provide the user with 3-sets of normally open (NO) and normally closed (NC) single-pole double-throw (SPDT) dry relay contact closures, available on a panel-mounted terminal block, rated at a minimum 120V/1A, and labeled so as to identify each contact. For typical configuration, see Figure 925-6.

1). The first set of NO and NC contact closures shall be energized whenever the unit switches to battery power. Contact shall be labeled or marked “On Batt.”

2). The second set of NO and NC contact closures shall be energized whenever the battery approaches approximately 40% of remaining useful capacity. Contact shall be labeled or marked “Low Batt.”

3). The third set of NO and NC contact closures shall be energized two hours after the unit switches to battery power. Contact shall be labeled or marked “Timer.”

4). Relay contact activation shall be annunciated on the front panel via a visual indication. This can be either discreet LED, or part of LCD screen, etc.

Figure 925 – 6 Relay Contacts (NO/NC) available on panel-mounted terminal block (typ)

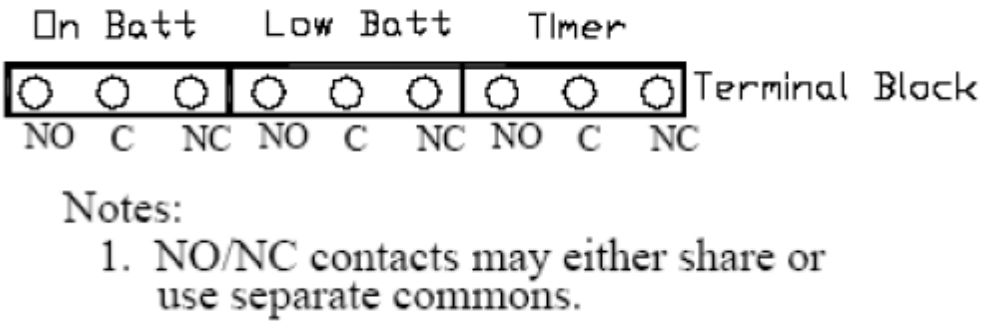

e. Operating temperature for both the inverter/charger, power transfer relay and manual bypass switch shall be –37 °C (-35F) to +74 °C (+165 F).

f. Both the Power Transfer Relay and Manual Bypass Switch shall be rated at 240VAC/30 amps, minimum

g. The BBS shall use a temperature-compensated battery charging system. The charging system shall compensate over a range of 2.5 – 4.0 mV/ °C (5-8 F) per cell. The temperature sensor shall be external to the inverter/charger unit. The temperature sensor shall come with 3 meters (10 feet) of wire.

h. Batteries shall not be recharged when battery temperature exceeds 50 °C (122 F) ± 3 °C (6 F).

i. BBS shall bypass the utility line power whenever the utility line voltage is outside of the following voltage range: 100VAC to 130VAC (± 2VAC).

j. When utilizing battery power, the BBS output voltage shall be between 110 VAC and 125 VAC, pure sine wave output, _ 3% THD, 60Hz ± 3Hz.

k. BBS shall be compatible with CALTRANS Model 332A Cabinets, Model 170E Controllers, Model 2070 Controllers and cabinet components for full time operation.

l. In cases of low (below 98VAC) or absent utility line power, when the utility line power has been restored at above 105 VAC ± 2 VAC for more than 30 seconds, the BBS shall transfer from battery backed inverter mode back to utility line mode.

m. In cases of high utility line power (above 132VAC), when the utility line power has been restored at below 125VAC ± 2 VAC for more than 30 seconds, the BBS shall transfer from battery backed inverter mode back to utility line mode

n. BBS shall be equipped to prevent a malfunction feedback to the cabinet or from feeding back to the utility service.

o. In the event of inverter/charger failure, battery failure or complete battery discharge, the power transfer relay shall revert to the NC (and de-energized) state, where utility line power is connected to the cabinet.

p. Recharge time for the battery, from “protective low-cutoff” to 80% or more of full battery charge capacity, shall not exceed twenty (20) hours.

2. Mounting/Configuration

NOTE: All references made to EIA rail or EIA 19” (482.6mm) rack shall conform to Electronic Industries Standards EIA-310-B, Racks, Panels, and Associated Equipment, with 10-32 “Universal Spacing” threaded holes.

a. General

1). Inverter/Charger Unit shall be shelf-mounted or rack-mounted on a standard EIA 19” rack. If the

inverter/charger is mounted inside the 332A Cabinet (Configuration 1), a shelf shall be provided that supports the weight of the unit.

2). Power Transfer Relay and Manual Bypass Switch shall be mounted on EIA rail.

3). All interconnect wiring shall be provided between Power Transfer Relay, Bypass Switch and Cabinet Terminal Service Block and shall be no less than 3 meters (9'10") of UL Style 1015 CSA TEW with the following characteristics:

- AWG Rating: 10 AWG
- Stranding: 105 strands of 30 AWG tinned copper
- Rating: 600 V, 105 °C, PVC Insulation

4). Relay contact wiring provided for each set of NO/NC relay contact closure terminals shall be a minimum of 3 meters (10 feet) of UL Style 1015 CSA TEW 18 AWG wire, same ratings as above, except 16 strands of 30 AWG tinned copper. Wiring shall be of adequate length for particular installation.

5). Figure 925-7 provides clarification as to how BBS Power Transfer Relay and Manual Bypass Switch are interconnected with Model 332A Cabinets in order to ensure interchangeability between all BBS manufacturers.

Figure 925- 7 BBS Utility Power Connection Diagram

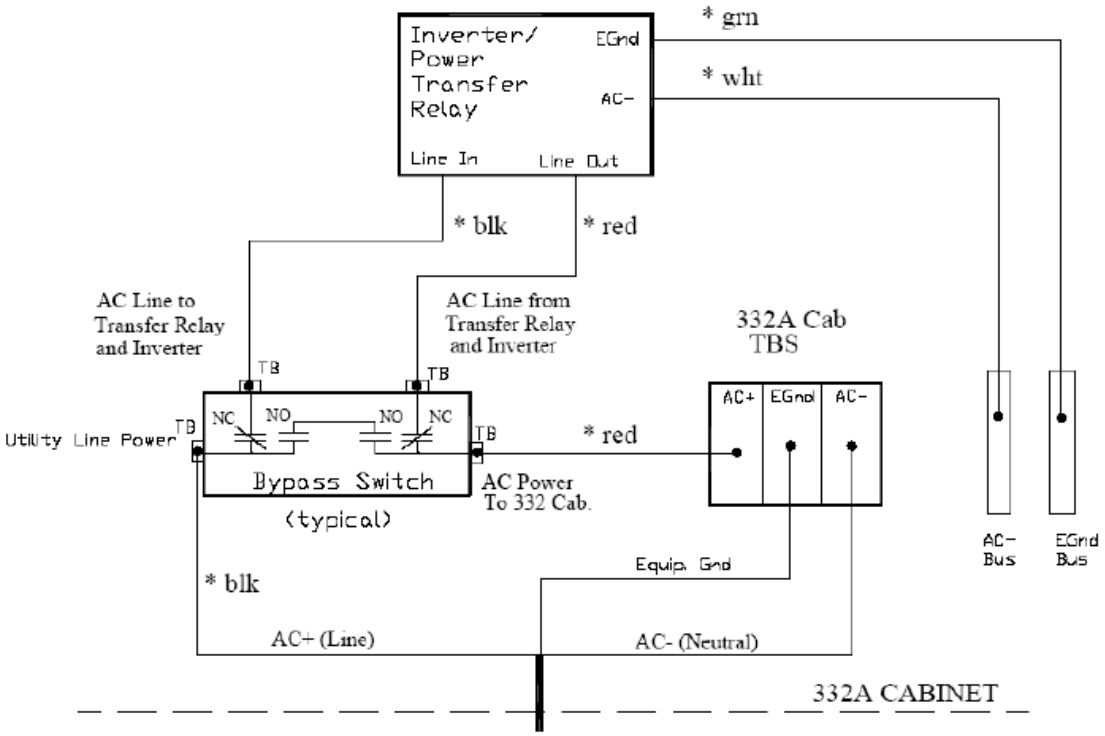

* As a minimum, these 3-meter lengths as par kit.

*As a minimum, these wires shall be provided in 3-meter (10 feet) lengths as part of the interconnect wiring kit.

6). All necessary hardware for mounting (shelf angles, rack, etc) shall be included in the bid price of the BBS. All bolts/fasteners and washers shall meet the following requirements:

- Screw type: Pan Head Phillips machine screw
- Size and Thread pitch: 10-32
- Material: 18-8 stainless steel (Type 316 stainless steel is acceptable as an alternate)
- Washer: Use one flat washer (18-8 stainless steel) under the head of each 10-32 screw (provided that the screws are properly tightened, lock washers are unnecessary.)
- Number of screws per hinge bracket: Minimum of six (6) screws per hinge bracket spaced evenly along bracket, with one screw near each end.

7). There shall be two (2) basic BBS mounting options:

a). Configuration 1 – The BBS (Inverter/Charger, Bypass Switch and Transfer Relay only) installed inside the 332A Cabinet, with the batteries installed in the externally mounted cabinet. See Figure 925-8 for location of inverter in 332A cabinet.

b). Configuration 2 – The entire BBS, including batteries, installed inside the externally mounted cabinet.

Figure 925-8 BBS Mounting Diagram

For a typical Model 332A Cabinet

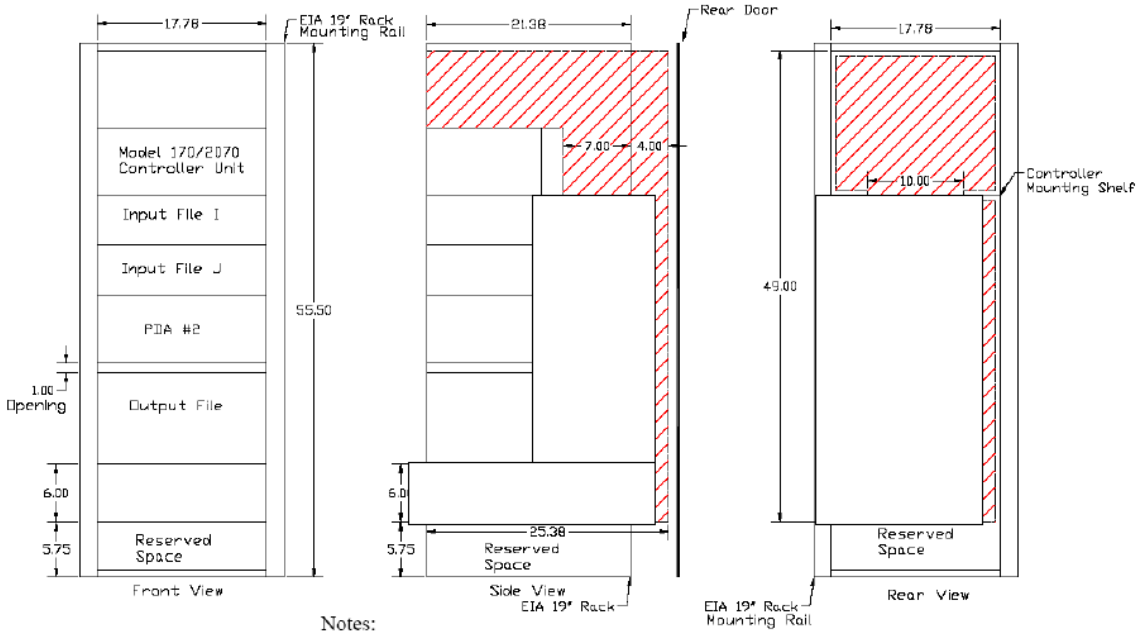

Notes:
Area inside of dashed lines represents available mounting locations for BBS.
Prescribed available mounting areas are approximate.
All dimensions shown are in inches.

8). External Cabinet

a). The External Cabinet shall be used for housing batteries and/or BBS, which includes inverter/charger unit, power transfer relay, manually operated bypass switch, any other control panels, and all wiring and harnesses.

b). The same Inverter/Charger, Power Transfer Relay and manually operated Bypass Switch that fits inside a typical fully equipped CALTRANS Model 332A Cabinet shall also be able to fit inside the externally mounted cabinet.

c). The External Cabinet shall be a NEMA 3R rated cabinet conforming to <u>TEES, August 16, 2002 Chapter 7, Section 2-Housings</u> for the construction and finish of the cabinet. The specific finish of the external cabinet shall match the finish of the 332A cabinet. Anti-Graffiti paint shall not be used. Two separate mounting installations shall be used. Refer to the project plans for the appropriate mounting installation.

i. Mounting Installation Type A shall be typically used for installing at locations with existing 332 cabinet. This cabinet mounting installation shall attach the exterbnal cabinet to the side of the 332 cabinet in the relationship as shown in figure 925-9. Type A mounting installation shall use fasteners that meet the following requirements:

- *(Total of 8 bolts per cabinet with 2 flat washers per bolt and 1 K-lock nut per bolt)*
- *Cabinet mounting bolts shall be:*
- *18-8 Stainless Steel Hex Head (Fully Threaded)*
- *3/8" – 16 X 1"*
- *Washers shall be:*
- *Designed for 3/8" bolt*
- *18-8 Stainless Steel 1" OD round flat type*
- *K-lock washer shall be:*
- *18-8 Stainless Steel, Hex Nut Assembled with Free-Spinning Tooth Washer*
- *3/8" – 16 Screw size*

External Cabinet to 332A Cabinet couplings shall provide a conduit for power connections between the 332A Cabinet and External Cabinet. The couplings shall consist of three parts and meet the following requirements:

- *2" Nylon Insulated, Steel Chase Nipple*
- *2" Sealing, Steel Locknut*
- *2" Nylon Insulated, Steel Bushing*

The external cabinet shall come provided with all bolts, washers, nuts and cabinet-cabinet coupler fittings provided, necessary for mounting the external cabinet to the 332A Cabinet.

ii. *Mounting Installation Type B shall be typically used for locations where a new traffic controller cabinet and foundation are being installed. This cabinet installation shall provide the external battery cabinet as a base mount cabinet on the same foundation as the 332 cabinet. Connections between the cabinets shall be through conduit in the cabinet base. The external cabinet shall be installed in the same relationship as shown in figure 925-9 to the 332 cabinet.The external cabinet shall be installed so that it is centered on the 30 inch left side of the 332 cabinet.*

Figure 925-9 External BBS Cabinet Details

External Battery Cabinet

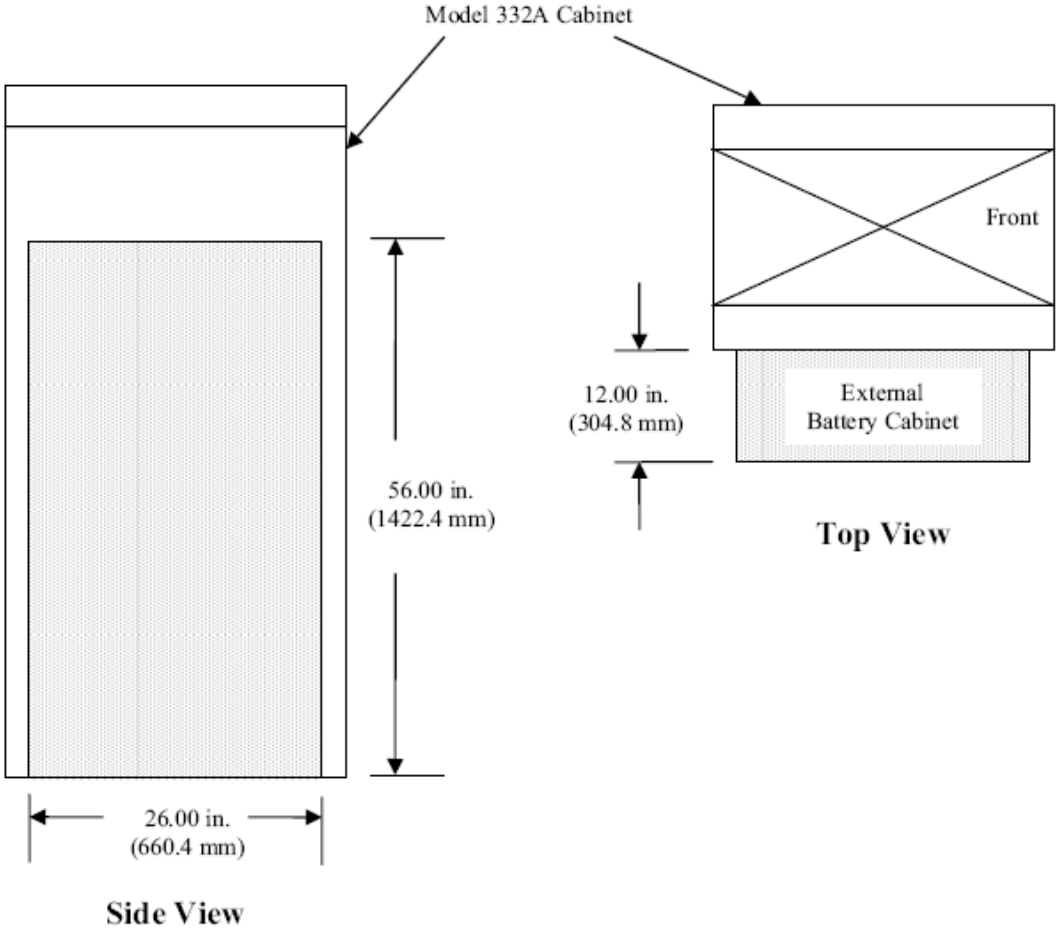

d). The specific dimensions and details of the external battery cabinet shall be as shown in Figures 925 – 10 through 925 – 12.

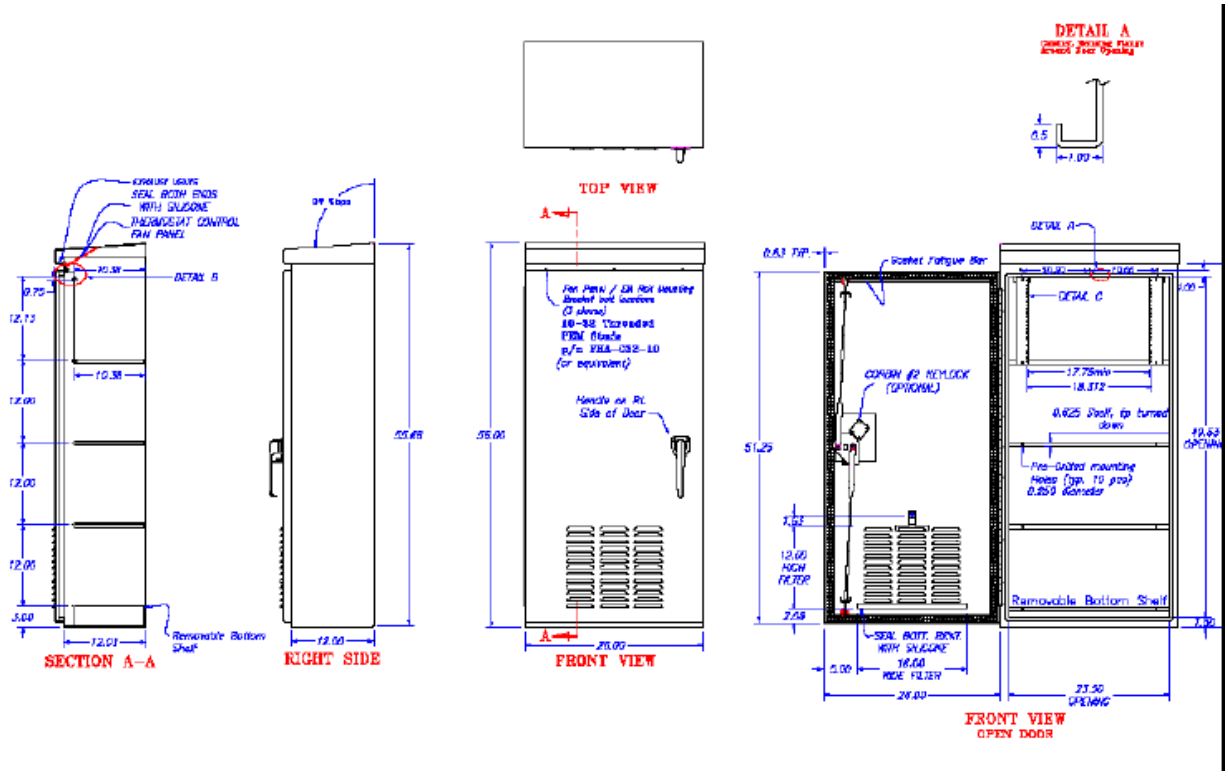

e). Four shelves shall be provided. There shall be a minimum of 304.8mm (12”) clearance between shelves. Each shelf shall be a minimum of 263.65mm (10.38”) X 635.0mm (25”), and capable of supporting a minimum of 57kg (125 lbs.). Shelf edges shall be turned down on all four sides for support and to provide a flat top surface. Shelves shall be predrilled with EIA rail mounting holes. Shelves shall provide a vertical “passageway” for wring in the rear of the cabinet on both the left and right.

f). The bottom shelf shall be capable of being removed.

Figure 925-11 EIA Rail for Mounting Inverter or PTR inside External BBS Cabinet

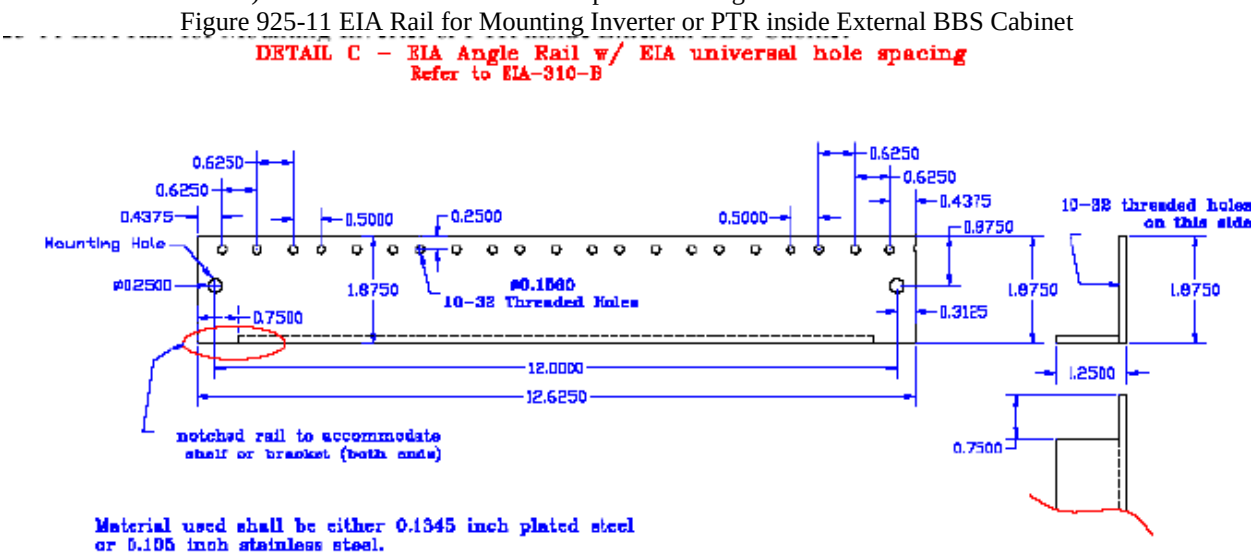

g). The external cabinet shall be ventilated through the use of louvered vents, filter, and one thermostatically controlled fan as per TEES Chapter 7 Section 2-Housings.

h). External cabinet fan shall be AC operated from the same line output of the Manual Bypass Switch that supplies power to the 332 Cabinet. A 2-position terminal block shall be provided on the fan panel, along with 3 meters (10 feet) of connected hookup wire.

i). The door shall be attached to the cabinet through the use of either a continuous stainless steel piano hinge or four, two-bolts per leaf, hinges as per TEES Chapter 7 Section 2. The door shall use a padlock clasp or latch and lock mechanisms as described in the TEES, in order to lock the door.

j). Two EIA angle rails, per Detail C, Figure 925 – 11, along with all necessary mounting hardware (4 sets of 10-32 bolts and nuts with captive washers) shall be provided with the external cabinet (not installed). Rails shall be symmetric to allow for installation on either right or left sides of the cabinet. Mounting holes and bracket shall allow for EIA rail installation at any location in the external
cabinet. The EIA mounting angle nominal thickness shall be either 0.1345 inch (3.4163mm) plated steel or 0.105 inch (2.667mm) stainless steel.

k). EIA rail mounting bracket shall be of continuous, one-piece design bolted into the cabinet to provide adequate support for rail-mounted equipment. See Figure 925 – 12.

l). Pressed in, flush-head threaded screw posts shall be inserted into the front face of the cabinet enclosure top sill. These threaded posts shall be used to mount both the fan panel and the EIA railmounting bracket. The screw posts shall be #10-32 thread size stud 0.625 inches in length. Refer to Figure 925 – 10, front views for mounting detail.

Figure 925 – 12 EIA Rail Mounting Bracket for Mounting EIA Rails inside External BBS Cabinet

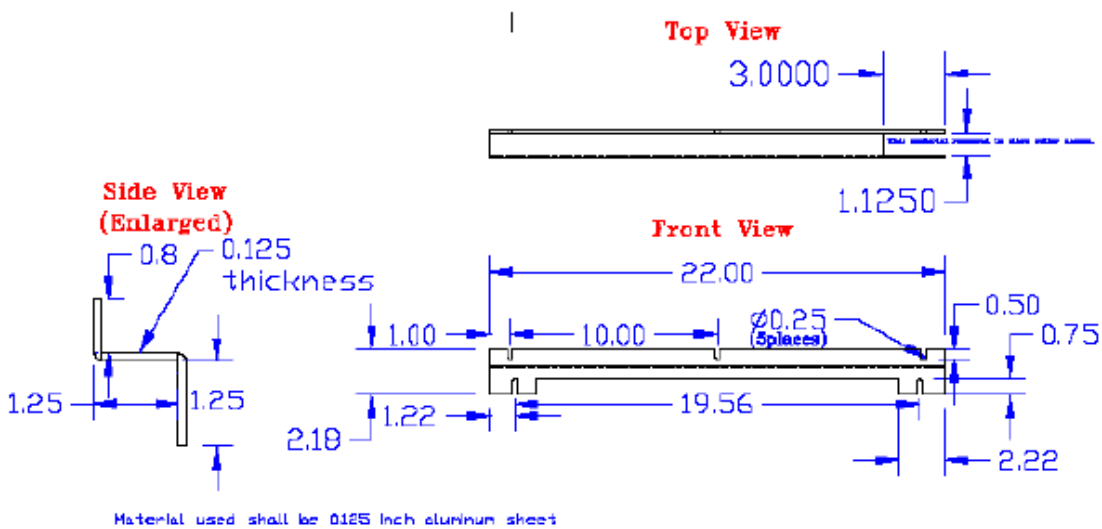

3. Maintenance, Displays, Controls and Diagnostics

a. The BBS shall include a display and /or meter to indicate current battery charge status and conditions.

1). The BBS shall provide voltmeter standard probe input-jacks (+) and (-) to read the exact battery voltage drop at the inverter input.

2). The BBS shall include a 0 to 100% battery capacity LED indicator.

b. The BBS shall have lightning surge protection compliant with IEEE/ANSI C.62.41.

c. The BBS shall be equipped with an integral system to prevent battery from destructive discharge and overcharge.

d. The BBS and batteries shall be easily replaced with all needed hardware and shall not require any special tools for installation.

e. The BBS shall include a front-panel event counter display to indicate the number of times the BBS was activated and a front-panel hour meter to display the total number of hours the unit has operated on battery power. Both meters shall have push button resets.

f. Manufacturer shall include a set of equipment lists, operation and maintenance manuals, and board-level schematic and wiring diagrams of the BBS,

g. The BBS shall include on the front panel of the inverter, a factory installed Ethernet port for SNMP/WEB communications.

4. Battery System
   a. Individual batteries shall be:
      1). Voltage rating: 12V type
      2). Group size: 24 maximum
      3). Batteries shall be easily replaced and commercially available off the shelf.
   b. Batteries used for BBS shall consist of 4 to 8 batteries with a cumulative minimum rated capacity of 240 amphours.
   c. Batteries shall be deep cycle, sealed prismatic lead-calcium based AGM/VRLA (Absorbed Glass Mat/ Valve Regulated Lead Acid).
   d. Batteries shall be certified by the manufacturer to operate over a temperature range of – 25 °C (-13F) to +74 °C (+165 F).
   e. The batteries shall be provided with appropriate interconnect wiring and corrosion-resistant mounting trays and/or brackets appropriate for the cabinet into which they will be installed.
   f. Batteries shall indicate maximum recharge data and recharging cycles.
   g. Battery Harness
      1). Battery interconnect wiring shall be via two-part modular harness.
      2). Part I shall be equipped with red (+) and black (-) 30.48 cm (12 inches) cabling that can be permanently connected to the positive and negative posts of each battery. Each red and black pair shall be terminated into an Anderson Power Pole Connector or AMP Power Series Connector or equivalent style connector.
      3). Part II shall be equipped with the mating Power Pole style connector for the batteries and a single, insulated Power Pole style connection to the inverter/charger unit. Harness shall be fully insulated and constructed to allow batteries to be quickly and easily connected in any order to ensure proper polarity and circuit configuration.
      4). Power Pole style connectors may be either one-piece or two-piece. If a two-piece connector is used, a locking pin shall be used to prevent the connectors from separating.
      5). The length of the battery interconnect harness (Part II) shall be a minimum of 152.4 cm (60 inches) from the Inverter/Charger plug to the first battery in the string. The lateral length of the harness between battery connectors shall be a minimum of 30.48 cm (12 inches).
      6). All battery interconnect harness wiring shall be UL Style 1015 CSA TEW or Welding Style Cable or equivalent, all of proper gauge with respect to design current and with sufficient strand count for flexibility and ease of handling.
      7). Battery terminals shall be covered and insulated with molded boots so as to prevent accidental shorting.

B. Fabrication

Refer to Subsection 925.2.07.A.1 for controller cabinet minimum fabrication Specifications.

C. Acceptance

General Provisions 101 through 150. Each BBS shall be manufactured in accordance with a manufacturer Quality Assurance (QA) program. The QA program shall include two Quality Assurance procedures: (1) Design QA and (2) Production QA. The Production QA shall include statistically controlled routine tests to ensure minimum performance levels of BBS units built to meet this specification and a documented process of how problems are to be resolved. The manufacturer, or an independent testing lab hired by the manufacturer, shall perform Design Qualification Testing on new BBS system(s) offered, and when any major design change has been implemented on an existing design. A major design change is defined as any modification, material, electrical, physical or theoretical, that changes any performance
characteristics of the system, or results in a different circuit configuration. Where a dispute arises in determining if a system is a new design or if the system has had a major design change, the State will make the final determination if Design Qualification Testing is required prior to production consideration.
Production Quality Control tests shall be performed on each new system prior to shipment. Failure to meet this requirements shall be cause for rejection. The manufacturer shall retain test results for seven years. Each BBS shall be given a minimum 100-hour burn-in period to eliminate any premature failures. Each system shall be visually inspected for any exterior physical damage or assembly anomalies. Any defects shall be cause for rejection.

D. Materials Warranty

Refer to Subsection 925.2.01.D for Materials Warranties. Manufacturers shall provide a two (2) year factory-repair warranty for parts and labor on the BBS from date of acceptance by the Department. Batteries shall be warranted for full replacement for two (2) years from date of purchase. The warranty shall be included in the total bid price of the BBS. **EXAMPLE: Alpha FXM-1100 watt series with Ethernet communications**

GROUP 2

Vehicle Detection, Measurement and Data Acquisition System

1. General System Requirements

1.1 These specifications define the minimum acceptable design, operational and functional performance requirements for high performance, multiple channel inductive loop vehicle detectors and its configuration software.

1.2 Detectors shall be warranted against defects in workmanship or materials for seven (7) years from date of shipment.

2. Inductive Loop Detection System

2.1 General Hardware Requirements

2.1.1 Detectors shall detect and hold the presence of all licensable motor vehicles including small motorcycles without detecting traffic in the adjacent lane (beyond 90 cm from the loop) on different loop and microloop configurations and with up to 750 meters of #18 AWG conductor homerun cable.

2.1.2. The detectors shall be STD card size (17.78 cm long by 11.43 cm high) with a front panel (2.67 cm wide by 11.43 cm high) and a 22 position edge connector, 3.96 mm spacing center-to-center gold over nickel plated contacts, dual sided contacts (44 contacts total).

2.1.3 Detectors shall be configured with the configuration software.

2.2 Special Features and Functional Performance Requirements

2.2.1 Detectors shall have eight sensitivity settings that are set independently for each channel.

2.2.1.1 Sensitivity settings, ΔL thresholds, shall directly relate to nanohenries of inductance change (ΔL).

2.2.1.2 The software sensitivity setting shall be one of seven Presence mode sensitivity settings.

The software sensitivity setting shall be one of eight Pulse mode sensitivity settings.

2.2.2 Detection output shall be based on a change in inductance, which exceeds the selected ΔL threshold.

2.2.3. Each increase in presence or pulse mode setting shall double the sensitivity of the previous setting.

2.2.4 Each detector shall have a single, switched oscillator system to sequentially excite and measure the inductance change in each channel to prevent crosstalk between channels within a unit.

2.2.5 Each detector shall have two independent serial ports, a front panel RS232 port and an RS485 port on the rear connector, to facilitate serial communication.

2.2.5.1 RS232 serial port shall have a multi-drop mode and be capable of full-duplex party line communication with up to eight detectors on the party line.

2.2.5.2 RS485 serial port shall have a multi-drop mode and be capable of half-duplex party line communication with up to thirty-two detectors on the party line.

2.2.6 The detector shall accommodate a communication module that converts the half-duplex RS485 port to a full-duplex RS232 port.

2.2.7 Presence output shall hold vehicle detection for at least a minimum of four minutes for small licensed motor vehicles (100cc. motorcycles) and for at least 60 minutes for automobiles before tuning-out vehicles.

2.2.8 Detector units shall have optically-isolated call outputs – $V_f \leq 2V@I_f=50mA$, $V_{off}=40VDCmax$. Output(s) shall be programmable to turn ON (fail-safe mode) or to turn OFF during inductive loop or traffic sensor failures.

2.2.9 Each channel shall have loop measurement capability to continuously verify loop system integrity.

2.2.9.1 The loop detector shall be capable of detecting and displaying current and historical faults in the inductive loop or lead-in system (short to ground, open circuit or inductance change ≥25%)

2.2.10 A green "Detect" LED and a red "Fault" LED on the front panel shall indicate status of each channel.

2.2.11 Call output for each detector channel shall provide detect durations in response to a licensed vehicle over a three or four turn 1.8m by 1.8m square loop to enable an external device to make accurate count, occupancy, vehicle speed and vehicle length measurements.

2.2.12 The response time to inductance decreases (vehicle detects), call output ON, shall be symmetrical with the response time to inductance increases (loss of vehicle detection), call output OFF.

2.2.13 The detectors shall have software configurable Normal and Fast Recovery modes of operation

2.2.13.1 In Fast Recovery mode the channel shall recover to full sensitivity within 750 milliseconds after all vehicles leave the inductive loop sensing zone.

2.2.14 Loop detectors shall have a Remote Reset input pin on the card rear connector.

2.2.15 Each detector shall be capable of synchronizing to other detectors of the same make and model within the same detector rack. One detector shall be set as synchronization master while all other detectors in the group shall be set as synchronization slaves.

2.2.16 The vehicle detector shall collect and store counts and occupancy in time bins for each channel.

2.2.17 The detector shall be capable of being configured to Long Loop Counting mode with the software.

2.2.16.1. The long-loop vehicle count shall store in the detector's memory for downloading with software using the serial ports.

2.2.18 Channel pair 1 & 2 or channel pair 3 & 4 shall configurable with the software to Directional Detection for detection of the travel direction of vehicles and for counting the vehicles for each direction.

2.3 Connector Pinout Configuration

BOARD EDGE CONNECTOR TERMINATIONS			
Pin	**Function**	**Pin**	**Function**
A	Common of +24 VDC	1	Synchronize Conductor 1
B	+24 VDC (+10.8 VDC to 38 VDC)	2	Synchronize Conductor 2
C	RESET External	3	NC
D	Channel 1 Loop Input A	4	Channel 1 Redundant Loop Input A
E	Channel 1 Loop Input B	5	Channel 1 Redundant Loop Input B
F	Channel 1 Switch Output (C)	6	NC
H	Channel 1 Switch Output (E)	7	Channel 1 Disturbance Signal (OC)
J	Channel 2 Loop Input A	8	Channel 2 Redundant Loop Input A
K	Channel 2 Loop Input B	9	Channel 2 Redundant Loop Input B
L	PE (Protective Earth)	10	NC
M	NC	11	NC
N	NC	12	NC
P	Channel 3 Loop Input A	13	Channel 3 Redundant Loop Input A
R	Channel 3 Loop Input B	14	Channel 3 Redundant Loop Input B
S	Channel 3 Switch Output (C)	15	NC
T	Channel 3 Switch Output (E)	16	Channel 3 Disturbance Signal (OC)
U	Channel 4 Loop Input A	17	Channel 4 Redundant Loop Input A
V	Channel 4 Loop Input B	18	Channel 4 Redundant Loop Input B
W	Channel 2 Switch Output (C)	19	RS-485-A
X	Channel 2 Switch Output (E)	20	Channel 2 Disturbance Signal (OC)
Y	Channel 4 Switch Output (C)	21	RS-485-B
Z	Channel 4 Switch Output (E)	22	Channel 4 Disturbance Signal (OC)

Pin 1 through 22 is on the top (component) side and pin A through Z is on the back (solder side).

Polarization keys shall be located at three positions:

Between B/2 and C/3
Between M/11 and N/12
Between E/5 and F/6

3.1 Configuration Software Requirements

3.1.1 A Windows™ based configuration software program shall be available for setting up the vehicle detector parameters, communication and data collection, for configuring binning, logging, directional detection, viewing diagnostics, and fault monitoring using the vehicle detector's serial ports.

3.1.2 A Microloop tab shall allow setting Microloop mode and parameters for each channel independently.

3.1.3 A Long-Loop tab shall allow Long Loop Count mode to be set up for each channel independently.

3.1.4 A Directional tab shall allow directional travel detection set up by channel pair.

3.1.5 A Real-Time Vehicle Logging icon shall allow channel pairs to be set up for later use in calculation of vehicle speed and length measurements using the configuration software.

3.1.6 A Traffic Data Binning icon with tab to set up channels for collecting binned count and occupancy data and tab to retrieve collected data.

3.1.7 The Real-Time Activity window shall display all current detection information pertaining to each channel, including current inductance measurements, last fault (or historical fault) information, information specific to the last vehicle detected plus traffic counts/travel direction detection counts.

3M CANOGA C900 2-CHANNEL OR 4-CHANNEL DETECTOR OR APPROVED EQUIVALENT.

GROUP 3

The purpose of Group 3 is to set forth specification requirements for Vehicular Signal Heads, Pedestrian Signal Heads, CCTV Camera's, Video Detection, Microwave Vehicle Motion Detector, LED Signals,. All design qualification testing shall be completed, documented and submitted with the equipment quotation.

SECTION 1

TRAFFIC SIGNAL HEADS

Specification for Traffic Signal Heads

1. General

This specification sets forth the minimum requirements for a traffic signal housing.

1.1 The standard signal is composed of (3) injection molded polycarbonate LED ready body sections containing the door and visor. The basic construction design provides minimum weight but maximum rigidity and strength. The housing, door and visor are injection molded of ultraviolet stabilized, pre-colored opaque polycarbonate. It meets or exceeds ITE specifications.

1.2 **Thickness –** One piece unit with serrations in 5 degree increments at each end. Each housing has provisions for mounting two terminal blocks and attaching backplates. Housings may be fastened together to make multi-section signals. The 8" and 12" housings can be intermixed to form combination signals

1.3 **LED MODULES -** Modules are to be pixalated. The standard lens is poly carbonate and capable of withstanding illumination by standard traffic signal positive positioning. Locking is achieved through the use of serrated brackets, mast arm or span wire fittings.

1.4 **DOOR –** One piece polycarbonate unit equipped with stainless steel hinge pins. Stainless steel captive eyebolts and wingnut to hold the door against the housing. The door may not weigh more than 1.5 lbs. The door shall be constructed in a way so that a positive deliberate upward force may remove the entire door assembly without the use of a tool.

1.5 **VISOR -** The removable twist-on visor is secured to the door with 4 stainless steel Phillips head screws. Cut-away, tunnel, and full circle visors are available upon request. Visors may not way more than 1.4 lbs

1.6 **TERMINAL BLOCK –** All terminal blocks are composed of a sturdy polycarbonate weather resistant casing and stainless steel hardware. The terminal block is to come installed in the yellow section of the signal. The terminal block is to come with (4) position 6X32 x ¾" screws standard for 3 section signal housings and (6) position 6X32 x ¾" screws standard for 4,5,and 6

section assemblies. The terminal block partition walls between each screw shall be a minimum height of 3/8".

1.7 **HARDWARE –** The signal head is to come assembled with round stainless steel top and bottom support brackets in the green and yellow sections. The top section shall have a support bracket on the inside and outside of the signal section. The outside top support bracket shall cover the entire top of the housing.

1.8 **HOUSING –** The signal housings shall be made of Gloss Black UV stabilized polycarbonate. The housing shall have UV stabilized door hinges that allow the signal door to be removed by a deliberate directed upward force without removing the pin. The door hinges shall have stainless steel pins as supports for the door assembly to rest on. The back of the signal housing shall have a round nipple design that allows for excess room inside the signal housing for wiring storage. The housing may not weight more than 5.3 lbs

Example of signal housing meeting specification = LFE

PEDESTRIAN SIGNAL HOUSING

1.9 **PEDESTRIAN SIGNAL HOUSING –** Pedestrian signal housing shall be designed to fit the same mounting brackets employed by California type A, B, C, and G pedestrian signals. Construction design shall be compatible with clamshell mounting hardware. The construction shall include a single piece cast aluminum housing, a single piece cast aluminum swing down door frame that utilizes aluminum hinge pins that can be removed by using positive force without the use of a tool, and a blank-out Z-crate sun visor. The wingnuts shall be aluminum and also be removed by using positive force without the use of a tool. The maximum overall dimension of the signal shall be 18.5"W x 18.75"H x 9"D, including the Z-crate sun visor and hinges. The entire unit shall be gloss black in color. Example part Traffic Parts **CH- SSPED-PNN-B2N-N**

1.10 **NSTALLATION OF PEDESTRIAN SIGNAL HEADS and PED EQUIPMENT** Refer to Douglas County Traffic Signal Specifications Group 5 Sections 2,3,4,5,6,7,8,9 for parts and Group 5 Section 14 for drawing of construction method.

SECTION 2

VIDEO DETECTION / VIDEO IMAGE PROCESSING SYSTEM

Specification for a Modular (Single or Dual Camera), Detector Rack Mounted Video Detection

1. General

This specification sets forth the minimum requirements for a system that detects vehicles on a roadway using only video images of vehicle traffic.

The intent of the following specification is to describe the **minimum** requirements for providing a complete Video Detection System. The system shall be capable of providing presence vehicle detection and traffic data collection at selected intersections. The video system shall be expandable without removing or replacing existing units. The system shall have the capability to be altered in operation from a centrally based traffic management center using VRAS software.

OVERVIEW:

Acceptable systems include that of any manufacturer, provided such equipment meets **all** qualifying specifications identified herein. Using standard image sensor optics and in the absence of occlusion, the system shall be able to detect vehicle presence with 98% accuracy under normal conditions (days and nights), and 96% accuracy under adverse conditions (fog, rain, snow).

All items and materials furnished shall be new, unused, current production models installed and operational in a user environment and shall be items currently in distribution. The detection and data collection algorithms shall have a proven record of field use, with a minimum of three (3) years of service.

VIDEO VEHICLE DETECTION SYSTEM

1. GENERAL:

These technical specifications describe the minimum physical and functional properties of a video detection system. The system shall be capable of monitoring all licensed vehicles on the roadway, providing video detection for areas outlined in the construction drawings. The entire video detection system shall consist of the following:

- Single Slot Video Image Processing unit(s).
- Single Slot MPEG-4 Video system communications module.
- Video camera(s) with sunshield.
- Camera lens.
- Surge suppressor.
- All other necessary equipment for operation.
- The IVDS system should be able to return video to a central Traffic Control Center by use of a Edge Connect Video Card Processor. Detection programming should also be possible using VRAS software.

1.1 System Hardware

The video detection system shall consist of one, two or four video cameras, a video detection processor (VDP) which mounts in a standard detector rack; a detector rack mounted extension module (EM), surge suppressor for video, and a pointing device.

1.2 System Software

The system shall include software that detects vehicles in multiple lanes using only the video image. Detection zones shall be defined using only an on board video menu and a pointing device to place the zones on a video image. Up to 24 detection zones per camera shall be available. A separate computer shall not be required to program the detection zones.

2. Functional Capabilities

2.1 The VDP shall process video from one, two or four sources depending upon the VDP module used. The source can be a video camera, DVD or video tape player. The video shall be input to the VDP in NTSC or PAL composite video format and shall be digitized and analyzed in real time. Dual and quad video VDP's shall process images from all video inputs simultaneously.

2.2 The VDP shall detect the presence of vehicles in up to 24 detection zones per camera. A detection zone shall be approximately the width and length of one car.

2.3 Detection zones shall be programmed via an on-board menu displayed on a video monitor and a pointing device connected to the VDP. The menu shall facilitate placement

of detection zones and setting of zone parameters or to view system parameters. A separate computer shall not be required for programming detection zones or to view system operation.

2.4 The VDP shall store up to three different detection zone patterns. The VDP can switch to any one of the three different detection patterns within 1 second of user request via menu selection with the pointing device. Each configuration can be uniquely labeled for identification and the current configuration letter is displayed on the monitor.

2.5 The VDP shall detect vehicles in real time as they travel across each detector zone.

2.6 The VDP shall have an EIA232 port for communications with an external computer. The VDP EIA232 port shall be multi-drop compatible.

2.7 The VDP shall accept new detector patterns from an external computer through the EIA232 port when the external computer uses the correct communications protocol for downloading detector patterns. A Windows™-based software designed for local or remote connection and providing video capture, real-time detection indication and detection zone modification capability shall be provided with the system.

2.8 The VDP shall send its detection patterns to an external computer through the EIA232 port when requested when the external computer uses the appropriate communications protocol for uploading detector patterns.

2.9 The extension module (EM) shall be available to avoid the need of rewiring the detector rack, by enabling the user to plug an extension module into the appropriate slot in the detector rack. The extension module shall be connected to the VDP by an 8-wire cable with modular connectors. VDP and EM communications shall be accommodated by methods using differential signals to reject electrically coupled noise. The extension module shall be available in both 2 and 4 channel configurations. EM configurations shall be programmable from the VDP. A separate I/O module with 24 outputs – 8 inputs using external wire harness for expanded flexibility shall also be available.

2.10 The camera system shall be able to transmit the composite video signal, with minimal signal degradation, up to 1000 feet under ideal conditions.

2.11 The associated VDP shall default to a safe condition, such as a constant call on each active detection channel, in the event of loss of video signal.

2.12 The system shall be capable of automatically detecting low-visibility conditions such as fog and respond by placing all defined detection zones in a constant call mode. A user-selected output shall be active during the low-visibility condition that can be used to modify the controller operation if connected to the appropriate controller input modifier(s). The system shall automatically revert to normal detection mode when the low-visibility condition no longer exists.

3. Vehicle Detection

3.1 A minimum of 24 detection zones shall be supported and each detection zone shall be user definable in size and shape to suit the site and the desired vehicle detection region.

3.2 A single detection zone shall be able to replace multiple inductive loops and the detection zones shall be OR'ed as the default or may be AND'ed together to indicate vehicle presence on a single phase of traffic movement.

3.3 Placement of detection zones shall be done by using only a pointing device and a graphical interface built into the VDP and displayed on a video monitor. No separate computer shall be required to program the detection zones.

3.4 A minimum of 3 detection zone patterns shall be saved within the VDP memory. The VDP's memory shall be non-volatile to prevent data loss during power outages. The VDP shall continue to operate (e.g. detect vehicles) using the existing zone configurations even when the operator is defining/modifying a zone pattern. The new zone configuration shall not go into effect until the configuration is saved by the operator.

3.5 The selection of the detection zone pattern for current use shall be done through a local menu selection or remote computer via EIA232 port. It shall be possible to activate a detection zone pattern from VDP memory and have that detection zone pattern displayed within 1 second of activation.

3.6 When a vehicle is detected crossing a detection zone, the corners of the detection zone will flash on the video overlay display screen to confirm the detection of the vehicle.

3.7 Detection shall be at least 98% accurate in good weather conditions and at least 96% accurate under adverse weather conditions (rain, snow, or fog). Detection accuracy is dependent upon site geometry; camera placement, camera quality and detection zone location, and these accuracy levels do not include allowances for occlusion or poor video due to camera location or quality.

3.8 Detector placement shall not be more distant from the camera than a distance of ten times the mounting height of the camera.

3.9 The VDP shall provide up to 24 channels of vehicle presence detection per camera through a standard detector rack edge connector and one or more extension modules.

3.10 The VDP shall provide dynamic zone reconfiguration (DZR) to enable normal detector operation of existing channels except the one where a zone is being added or modified during the setup process. The VDP shall output a constant call on any detection channel corresponding to a zone being modified.

3.11 Detection zone setup shall not require site specific information such as latitude and longitude to be entered into the system.

3.12 The VDP shall output a constant call for each enabled detector output channel if a loss of video signal occurs. The VDP shall also output a constant call during the background learning period.

3.13 Detection zone outputs shall be configurable to allow the selection of presence, pulse, extend, and delay outputs. Timing parameters of pulse, extend, and delay outputs shall be user definable between 0.1 to 25.0 seconds.

3.14 Up to six detection zones shall be capable to count the number of vehicles detected. The count value shall be internally stored for later retrieval through the EIA232 port. The data collection interval shall be user definable in periods of 5, 15, 30 or 60 minutes.

4. VDP and EM Hardware

4.1 The VDP and EM shall be specifically designed to mount in a standard NEMA TS-1, TS-2, 2070 ATC, 170 type detector rack, using the edge connector to obtain power and provide contact closure outputs. No adapters shall be required to mount the VDP or EM in a standard detector rack. Detector rack rewiring shall not be required.

4.2 The VDP and EM shall operate in a temperature range from -34°C to +74°C and a humidity range from 0%RH to 95%RH, non-condensing.

4.3 The VDP and EM shall be powered by 12 or 24 volts DC. These modules shall automatically compensate for the different input voltages.

4.4 VDP power consumption shall not exceed 300 milliamps at 24 VDC. The EM power consumption shall not exceed 120 milliamps at 24 VDC.

4.5 The VDP shall include an EIA232 port for serial communications with a remote computer. The VDP EIA232 port shall be multi-drop compatible. This port shall be a 9-pin "D" subminiature connector on the front of the VDP.

4.6 The VDP shall utilize flash memory technology to enable the loading of modified or enhanced software through the EIA232 port without modifying the VDP hardware.

4.7 The VDP and EM shall include detector output pin out compatibility with industry standard detector racks.

4.8 The front of the VDP shall include detection indications, such as LED's, for each channel of detection that display detector outputs in real time when the system is operational.

4.9 The front of the single and dual VDPs shall include one or two BNC video input connectors suitable for RS170 video inputs as required. For four channel VDPs, an adapter cable that converts a DB15 interface to 4 individual BNC connectors shall be used. The video input shall include a switch selectable 75-ohm or high impedance termination to allow camera video to be routed to other devices, as well as input to the VDP for vehicle detection. RCA type connectors/jacks for video input are not allowed. Video shall not be routed via the edge connectors of the processor.

4.10 The front of the VDP shall include one BNC video output providing real time video output that can be routed to other devices. A RCA type connector/jack for video output is not allowed.

4.11 The front panel of the VDP and EM shall have a detector test switch to allow the user to place calls on each channel. The test switch shall be able to place either a constant call or a momentary call depending on the position of the switch.

5. Video Detection Camera

5.1 Refer to “Camera Specification” for specific information and camera options.

6. Installation

6.1 The coaxial cable to be used between the camera and the VDP in the traffic cabinet shall be Belden 8281. The coax cable shall be a continuous unbroken run from the camera to the VDP. This cable shall be suitable for installation in conduit or overhead with appropriate span wire. 75-ohm BNC plug connectors should be used at both the camera and cabinet ends. The coaxial cable, BNC connector, and crimping tool shall be approved by the supplier of the video detection system, and the manufacturer's instructions must be followed to ensure proper connection.

6.2 The power cabling shall be 16 AWG three conductor cable with a minimum outside diameter of 0.325 inch and a maximum diameter of 0.490 inch. The cabling shall comply with the National Electric Code, as well as local electrical codes. Cameras may acquire power from the luminaire if necessary.

6.3 The video detection camera shall be installed by factory-certified installers as recommended by the supplier and documented in installation materials provided by the supplier. Proof of factory certification shall be provided.

6.4 The camera enclosure shall be equipped with separate, weather-tight connections for power and setup video cables at the rear of the enclosure. These connections may also allow diagnostic testing and viewing of video at the camera while the camera is installed on a mast arm or pole using a lens adjustment module (LAM) supplied by the VDP supplier. Video and power shall not be connected within the same connector.

6.5 Recommended camera placement height shall be 33 feet (or 10 meters) above the roadway, and over the traveled way on which vehicles are to be detected. For optimum detection the camera should be centered above the traveled roadway. The camera shall view approaching vehicles at a distance not to exceed 350 feet for reliable detection (height to distance ratio of 10:100). Camera placement and field of view (FOV) shall be unobstructed and as noted in the installation documentation provided by the supplier.

7. Limited Warranty

7.1 The supplier shall provide a limited three-year warranty on the video detection system. See suppliers standard warranty included in the Terms and Conditions of Sale documentation.

7.2 During the warranty period, technical support shall be available from the supplier via telephone within 4 hours of the time a call is made by a user, and this support shall be available from factory-certified personnel or factory-certified installers.

7.3 Updates to VDP software shall be available from the supplier without charge.

8. Maintenance and Support

8.1 The supplier shall maintain an adequate inventory of parts to support maintenance and repair of the video detection system. These parts shall be available for delivery within 30 days of placement of an acceptable order at the supplier's then current pricing and terms of sale for said parts.

8.2 The supplier shall maintain an ongoing program of technical support for the video detection system. This technical support shall be available via telephone, or via personnel sent to the installation site upon placement of an acceptable order at the supplier's then current pricing and terms of sale for on site technical support services.

8.3 Installation or training support shall be provided by a factory-authorized representative and shall be a minimum IMSA-Level II Traffic Signal Technician certified.

8.4 All product documentation shall be written in the English language.

IVDS VIDEO DETECTION CAMERA UNIT

Specification for a Color Video Detection Camera

1. General

This specification sets forth the minimum requirements for cameras that are to be used by video detection systems.

2. Video Detection Camera

2.1 Video detection cameras used for traffic detection shall be furnished by the video detection processor (VDP) supplier and shall be qualified by the supplier to ensure proper system operation.

2.2 The camera shall produce a useable video image of the bodies of vehicles under all roadway lighting conditions, regardless of time of day. The minimum range of scene luminance over which the camera shall produce a useable video image shall be the minimum range from nighttime to daytime, but not less than the range 1.0 lux to 10,000 lux.

2.3 The imager luminance signal to noise ratio (S/N) shall be more than 50 dB.

2.4 The camera shall be digital signal processor (DSP) based and shall use a CCD sensing element and shall output color video with resolution of not less than 470 TV lines. The CCD imager shall have a minimum effective area of 768(h) x 494(v) pixels.

2.5 The camera shall include an electronic shutter control based upon average scene luminance and shall be equipped with an auto-iris lens that operates in tandem with the electronic shutter.

2.6 The camera shall utilize automatic white balance.

2.7 The camera shall include a variable focal length lens with variable focus that can be adjusted, without opening up the camera housing, to suit the site geometry by means of a portable interface device designed for that purpose and manufactured by the detection system supplier.

2.8 The horizontal field of view shall be adjustable from 5.4 to 50.7 degrees. This camera configuration may be used for the majority of detection approaches in order to minimize the setup time and spares required by the user. The lens shall be a 10x zoom lens with a focal length of 3.8mm to 38.0 mm.

2.9 The lens shall also have an auto-focus feature with a manual override to facilitate ease of setup.

2.10 The camera shall incorporate the use of preset positioning that store zoom and focus positioning information. The camera shall have the capability to recall the previously stored preset upon application of power.

2.11 The camera electronics shall optionally include automatic gain control (AGC) to produce a satisfactory image at night.

2.12 The camera shall be housed in a weather-tight sealed enclosure. The enclosure shall be made of 6061 anodized aluminum. The housing shall be field rotatable to allow proper alignment between the camera and the traveled road surface.

2.13 The camera enclosure shall be equipped with a sunshield. The sunshield shall include a provision for water diversion to prevent water from flowing in the camera's field of view. The camera enclosure with sunshield shall be less than 6" diameter, less than 18" long, and shall weigh less than 6 pounds when the camera and lens are mounted inside the enclosure.

2.14 The enclosure shall be design so that the pan, tilt and rotation of the camera assembly can be accomplished independently without affecting the other settings.

2.15 The camera enclosure shall include a proportionally controlled heater, where the output power of the heater varies with temperature, to assure proper operation of the lens functions at low temperatures and prevent moisture condensation on the optical faceplate of the enclosure.

2.16 The glass face on the front of the enclosure shall have an anti-reflective coating to minimize light and image reflections.

2.17 The glass face shall also employ a special coating to minimize the buildup of environmental debris such as dirt and water.

2.18 When mounted outdoors in the enclosure, the camera shall operate satisfactorily in a temperature range from -34 °C to +60 °C and a humidity range from 0% RH to 100% RH. Measurement of satisfactory video shall be based upon VDP system operation.

2.19 The camera shall be powered by 120-240 VAC 50/60 Hz. Power consumption shall be 45 watts or less under all conditions. An optional DC power configuration shall be available for 12 VDC operation.

2.20 Recommended camera placement height shall be 33 feet (or 10 meters) above the roadway, and over the traveled way on which vehicles are to be detected. For optimum detection the camera should be centered above the traveled roadway. The camera shall view approaching vehicles at a distance not to exceed 350 feet for reliable detection (height to distance ratio of 10:100). Camera placement and field of view (FOV) shall be unobstructed and as noted in the installation documentation provided by the supplier.

2.21 The camera enclosure shall be equipped with separate, weather-tight connections for power and video cables at the rear of the enclosure. These connections may also allow diagnostic testing and viewing of video at the camera while the camera is installed on a mast arm or pole using a lens adjustment module (LAM) supplied by the VDP supplier. Video and power shall not reside within the same connector.

2.22 The video signal shall be fully isolated from the camera enclosure and power cabling.

3. Installation

3.1 The coaxial cable to be used between the camera and the VDP in the traffic cabinet shall be Belden 8281. This cable shall be suitable for installation in conduit or overhead with appropriate span wire. 75-ohm BNC plug connectors should be used at both the camera and cabinet ends. The coaxial cable, BNC connector, and crimping tool shall be approved by the supplier of the video detection system, and the manufacturer's instructions must be followed to ensure proper connection.

3.2 The power cabling shall be 16 AWG three conductor cable with a minimum outside diameter of 0.325 inch and a maximum diameter of 0.490 inch. The cabling shall comply

with the National Electric Code, as well as local electrical codes. Cameras may acquire power from the luminaire if necessary.

3.3 The video detection camera shall be installed by factory-certified installers as recommended by the supplier and documented in installation materials provided by the supplier. Proof of factory certification shall be provided.

4. Limited Warranty

4.1 The supplier shall provide a limited three-year warranty on the video detection camera. See suppliers standard warranty included in the Terms and Conditions of Sale documentation.

4.2 During the warranty period, technical support shall be available from the supplier via telephone within 4 hours of the time a call is made by a user, and this support shall be available from factory-certified personnel or factory-certified installers.

5. Maintenance and Support

5.1 The supplier shall maintain an adequate inventory of parts to support maintenance and repair of the video detection camera. These parts shall be available for delivery within 30 days of placement of an acceptable order at the supplier's then current pricing and terms of sale for said parts.

5.2 The supplier shall maintain an ongoing program of technical support for the video detection system. This technical support shall be available via telephone, or via personnel sent to the installation site upon placement of an acceptable order at the supplier's then current pricing and terms of sale for on site technical support services.

5.3 Installation or training support shall be provided by a factory-authorized representative and shall be a minimum IMSA-Level II Traffic Signal Technician certified.

5.4 All product documentation shall be written in the English language.

SECTION 3

LED SPECIFICATIONS

LIGHT EMITTING DIODE (LED) TRAFFIC SIGNAL
12" SPECIFICATION
FOR SPAN WIRE AND MAST ARM MOUNTED SIGNALS

Purchase Specification

LED Traffic Signal Modules

300mm (12 in.) and 200mm (8 in.)

1.0 PURPOSE

This specification provides the minimum performance requirements for 300 mm (12 in) and 200 mm (8 in) LED traffic signal modules. This specification refers to definitions and practices described in "Vehicle Traffic Control Signal Heads – Light Emitting Diode (LED) Circular Signal Supplement, Adopted June 27, 2005", referred to in this document as "VTCSH". All lamps shall be fully compliant to ITE requirements and shall be affixed with an ETL Verified label to demonstrate compliance to Section 6.3 (Production Tests & Inspections) of the latest ITE VTCSH Full Ball specifications.
Manufacturer shall use LEDs that are high flux or equivalent. LEDs that are 5mm shall not be used for 8" and 12" Full Ball modules. The multiple LED light source should be the latest technology available on the market. Only Red, Yellow and Green color emitting LED shall be utilized in the respective lamps. Mixtures of LEDs emitting different colors in a lamp is not permitted.

2.0 PHYSICAL AND MECHANICAL REQUIREMENTS

2.1 General

LED traffic signal modules are designed, as retrofit replacements for existing signal lamps shall not require special tools for installation. Retrofit replacement LED modules shall fit into existing traffic signal housings built to the VTCSH Standard without modification to the housing.

Installation of a retrofit replacement LED signal module into an existing signal housing shall only require the removal of the following existing components: lens, lamp module, reflector and gaskets.

The module shall be weather tight and fit securely in the housing and connect directly to existing electrical wiring.

2.2 LED Signal Module

2.2.1 The retrofit LED module shall be capable of replacing the optical unit.

2.2.2 The lens shall be clear for red, yellow and green modules. Tinting of any color is not permitted.

2.2.3 To achieve the visual appearance similar to that of an incandescent lamp (ie. smooth and non-pixilated), the LED module shall use a centralized light source.

2.2.4 The LED module lens shall be hard coated or otherwise made to comply with material exposure and weathering effects requirements per SAE J576

2.3 Environmental Requirements

2.3.1 The LED module shall be rated for use in the ambient operating temperature range measured at the exposed rear of the module, of -40 to +74°C (-40 to +165°F) according to MIL-STD-883, test method 1010.

2.3.2 A module shall be protected against dust and moisture intrusion, including rain and blowing rain according to MIL-STD-810F, test method 506.4, procedure 1, Rain and Blowing Rain.

2.3.3 The module lens shall be made of a UV stabilized material to prevent cracking, crazing or yellowing due to UV irradiation.

2.3.4 The external lens shall be smooth on the outside to prevent excessive dirt/dust buildup and the LED module shall be specifically designed to reduce sun reflections (Sun Phantom).

2.3.5 To minimize potential of sun reflections (Sun Phantom) the inside of LED module shall have a matte black finish with no added reflectors or mirrored surfaces.

2.3.6 The LED module shall be supplied with an installed gasket.

2.3.7 To ensure corrosion resistance, all modules shall be compliant to salt Fog ASTM B117-03 testing for 48 hours at 5% concentration with no traces of corrosion

2.4 Construction

2.4.1 The LED module shall be a single, self-contained device, not requiring on-site assembly for installation into an existing traffic signal housing. The power supply must fit and mount inside the LED module.

2.4.2 The assembly and manufacturing process for the LED assembly shall be designed to ensure all internal LED and electronic components are adequately supported to withstand mechanical shock and vibration from high winds and other sources.

2.4.3 To ensure the unit meets required environmental standards (including water tightness), the unit shall be sealed by use of an O-ring gasket compressed radially or permanently sealed in production. Lens' attached to housing with screws shall not be used.

2.4.4 All LED module shall be compliant with Shipping Test ISTA 1C (Vibration, compression and drop test). Third party test results are required.

2.5 Materials

2.5.1 Materials used for the lens and LED module construction shall conform to ASTM specifications, where applicable.

2.5.2 Enclosures containing the power supply and electronic components of the LED module shall be made of UL94 flame retardant materials. The lens of the LED module is excluded from this requirement.

2.6 Module Identification

2.6.1 Each LED module shall be identified on the backside with the manufacturer's name, serial number and country of origin.

2.6.2 The following operating characteristics shall be identified: nominal operating voltage, power consumption, and Volt-Ampere.

2.6.3 LED modules shall have a prominent and permanent vertical indexing indicator, i.e., an arrow pointing up or the word ‘UP’ or ‘TOP’, for correct indexing and orientation inside a signal housing. The distribution optics and front shell shall be designed with a key to ensure proper orientation when installed.

3.0 PHOTOMETRIC REQUIREMENTS

3.1 Luminous Intensity & Distribution

3.1.1 The maintained minimum luminous intensity values for the LED modules throughout the warranty period and at the end of the warranty period, under the operating conditions defined in Sections 2.3.1, and 4.2.1, shall not be less than the values shown in Appendices 1A & 1B.

3.1.2 To allow for inherent technology light depreciation over time and to compensate for high ambient temperature (+74°C, +165°F), manufacturer shall provide initial (Time = 0) intensity values by color as follows: Red = 160%, Green = 125%, Yellow = 150%.

3.1.2 The maximum permissible luminous intensity within the temperature range shall not exceed three times the required peak value of the minimum maintained luminous intensity for the selected signal size and color as per Appendix 1.

3.1.3 The uniformity of the signal output across the entire module shall not exceed a ratio of 10 to 1 between the maximum and minimum luminance values (cd/m^2). This must be verified by an independent lab report by a third party testing laboratory.

3.1.4 The LED module shall have a visual appearance similar to that of an incandescent lamp (ie: Smooth and non-pixilated).

3.1.5 Manufacturer shall use LEDs that are high flux or equivalent. LEDs that are 5mm shall not be used for 8” and 12” Full Ball modules.

3.2 Chromaticity

3.2.1 The measured chromaticity coordinates of the LED modules shall conform to the chromaticity requirements seen in Appendix 2.

3.2.2 The dominant wavelength for any individual color measurement of a portion of the emitting surface of a module, shall be within ±3 nm of the dominant wavelength for the average color measurement of the emitting surface as a whole.

4.0 ELECTRICAL

4.1 General

4.1.1 All wiring and terminal blocks shall meet or exceed the requirements of VTCSH Section 5.1. Two secured, color coded, minimum 39in long 600 V, 16 AWG minimum, jacketed wires, conforming to the NFPA 70, National Electrical Code, and rated for service at +105°C, are to be provided for electrical connection.

4.2 Voltage Range

4.2.1 LED modules shall operate from a 60 ± 3 Hz AC power line over a voltage range from 80 to 135 VAC RMS.

4.2.2 Nominal operating voltage for all measurements shall be 120 ± 3 Volts rms.

4.2.3 Fluctuations in line voltage over the range of 80 to 135 Vac shall not affect luminous intensity by more than ± 10 %.

4.2.4 The LED circuitry shall prevent flickering at less than 100 Hz over the voltage range specified in Section 4.2.1.

4.2.5 Low Voltage Turn Off: There shall be no illumination from the module when the applied voltage is less than 35 VAC.

4.2.6 Turn-On and Turn-Off Time: The modules shall reach 90% of their full illumination (turn-on) within 75 ms after the application of the nominal operating voltage. The LED modules shall not be illuminated (turn-off) within 75 ms after the removal of the nominal operating voltage. This shall be validated by an independent lab report by a third party testing laboratory.

4.3 Transient Voltage Protection

4.3 The LED module on-board circuitry shall include voltage surge protection to withstand high-repetition noise transients and low-repetition, high-energy transients as stated in NEMA Standard TS-2-2003 Section 2.1.8

In addition the module shall withstand the following surge immunity tests

- Sec 2.1.6 NEMA TS-2-2003, 300V, 2500W

- Sec 2.1.6 NEMA TS-2-2003, 600V, 10 microfarads
- IEC 1000-4-5 & ANSI/IEEE C62.41.2-2002, 3kV, 2 ohms
- IEC 1000-4-12 & ANSI/IEEE C62.41.2-2002, 6 kV, 30 ohms

4.4 LED Drive Circuitry

4.4.1 The shut down circuit should be triggered by the absence of LED current and not by measuring the output voltage across the LEDs.

4.4.2 The power supply must be current regulated.

4.5 Electronic Noise

The LED module and the associated on-board circuitry must meet Federal Communications Commission (FCC) Title 47, Subpart B, Section 15.109(b) regulations concerning the emission of electronic noise by Class A digital devices.

4.6 Power Factor (PF) and AC Harmonics

4.6.1 LED modules shall provide a power factor of 90% or greater when operated at nominal operating voltage and 25°C (77°F).

4.6.2 Total harmonic distortion induced into an AC power line by an LED signal module, operated at nominal operating voltage and 25°C (77°F) shall not exceed 20%.

4.7 Thermal Protection

The heat sink shall be U shaped for optimal thermal protection and have a surface area of adequate size to ensure proper heat dissipation from LEDs.

4.8 Failed State Impendence

The LED module shall be designed to detect catastrophic loss of the LED load. Upon sensing of the LED load, the module shall present a resistance of at least 250 Kohms across the input power leads within 300 msec. The Led light source will be said to have failed catastrophically if it fails to show any visible illumination when energized according to Section 4.2.1 after 75 msec.

4.9 Controller assembly Compatibility

4.9.1 The current draw shall be sufficient to ensure compatibility and proper triggering and operation of load current switches and conflict monitors in signal controller units.

4.9.2 Off State Voltage Decay: When the module is switched from the on state to the off state, the terminal voltage decay to a value less than 10 VAC RMS in less that 100 msec when driven by a maximum allowed load switch leakage current of 10 milliamps peak (7.1 milliamps AC).

5.0 QUALITY ASSURANCE

5.1 General

5.1.1 Quality Assurance Program: LED modules shall be manufactured in accordance with a vendor quality assurance (QA) program. The QA program shall include two types of quality assurance: (1) design quality assurance, and (2) production quality assurance. The production quality assurance shall include statistically controlled routine tests to ensure minimum performance levels of LED modules built to meet this specification.

5.1.2 Record Keeping: QA process and test result documentation shall be kept on file for a minimum period of five years following production of the last production unit.

5.1.3 Conformance: LED module designs not satisfying design qualification testing and the production quality assurance testing performance requirements in Sections 5.3 and 5.4 shall not be labeled, advertised, or sold as conforming to this specification.

5.1.4 ISO 9001:2000: Compliance: LED module manufacturer must present upon request the ISO 9001:2000 certificate of conformance

5.1.5 Independent Lab Testing: All lab report results shall be provided from an independent third part testing facility with randomly picked production units clearly indicating module serial numbers and production date codes.

5.2 Module Identification

5.2.1 Each LED module shall be identified with the manufacturer's name, model, operating characteristics and serial number. The operating characteristics shall include the nominal operating voltage, the stabilized power consumption and the nominal current draw in Watts, Volt-Amperes and Amperes, respectively.

5.3 Production Tests & Inspections

All lamps manufactured shall be affixed with an Intertek ETL Verified label to demonstrate compliance to Section 6.3 (Production Tests & Inspections) of the latest ITE VTCSH Full Ball specification, dated June 27, 2005.

5.3.1 Production Test Requirement: All new LED modules tendered for sale shall undergo the following Production Test and Inspection prior to shipment. Failure of a module to meet requirements of these Production Test and Inspection shall be cause for rejection. Test results shall be maintained for a period of 5 years following the production of the last production unit.

5.3.2 Luminous Intensity: All LED modules shall be tested for maintained minimum luminous intensity. A single point measurement with a correlation to the intensity requirements referred to in Section 3.0 may be used. The LED module shall be operated at nominal operating voltage and at an ambient temperature of 25°C (77°F).

5.3.3 Power Factor: All LED modules shall be tested for power factor per the requirements of Section 4.6.1. A commercially available power factor meter may be used to perform this measurement.

5.3.4 Current: All LED modules shall be measured for current flow in Amperes. The measured current values shall be compared against those resulting from design qualification measurements in Section 5.4.6.1. Measured current values in excess of 120% of the design qualification current values shall be cause for rejection.

5.3.5 Visual Inspection: All LED modules shall be visually inspected for any exterior physical damage or assembly anomalies.

5.4 Design Qualification Testing

5.4.1 Design Qualification Test Requirements. Design qualification testing shall be performed on new module designs, when a major design change has been implemented on an existing design, or after every 5 years that a design is in service. Modules used in design qualification testing shall be representative of the manufacturer's proposed normal production. If modules are provided with both clear and tinted lenses, the tests detailed below shall be conducted for all lens types. The certification of UV Stabilization (VTCSH Section 6.4.5.2) shall be provided for all materials used in or on the emitting lenses.

5.4.1.1 The manufacturer shall retain test data in accordance with VTCSH Section 6.1.2 or for 60 months following final production of a specific design, whichever is longer.

5.4.1.2 Six modules shall be used in Design Qualification Testing. All six modules shall be subjected to conditioning (VTCSH Section 6.4.2), followed by the Environmental Tests (VTCSH Section 6.4.3). Following the Environmental Tests, three modules shall undergo Photometric & Colorimetric Tests (VTCSH Section 6.4.4), followed by the Lens Tests (VTCSH Section 6.4.5). The remaining three modules shall undergo the Electrical Tests (VTCSH Section 6.4.6). Tests shall be conducted in the order described herein, unless otherwise specified. Figure 2 provides a flow chart for the Design Qualification Testing.

5.4.1.3 In order for a module design to be considered acceptable for marking with the label described in 3.6.3, all tested modules must comply with the acceptance/rejection criteria for the Environmental Tests (VTCSH Section 6.4.3), Photometric & Colorimetric Tests (VTCSH Section 6.4.4), Lens Tests (VTCSH Section 6.4.5), Electrical Tests (VTCSH Section 6.4.6), controller Assembly Compatibility Tests (VTCSH Section 6.4.7) and Failed State Impedance Test (VTCSH Section 6.4.8).

5.4.2 Conditioning: Modules shall be energized for a minimum of 24 hours, at 100% duty cycle, in an ambient temperature of +60°C (+140°F).

5.4.2.1 High Temperature High Humidity (HTHH): All Modules shall be tested for 1000 hours at 60°C temperature, 90% humidity using 100% Duty Cycle for the Red & Green and 12.5% Duty Cycle (5 sec on, 35 sec off) for the Yellow. Test results shall be provided to show compliance.

5.4.3 Environmental Tests:

5.4.3.1 Mechanical Vibration: Mechanical vibration testing shall be performed per MIL-STD-883, Test Method 2007, using three 4 minute

cycles along each x, y and z axis, at a force of 2.5 Gs, with a frequency sweep from 2 Hz to 120 Hz.

5.4.3.2 Temperature Cycling: Temperature cycling shall be performed per MIL-STD-883, Test method 1010. The temperature range shall include the full ambient operating temperature range specified in VTCSH Section 3.3.2. A minimum of 20 cycles shall be performed with a 30-minute transfer time between extremes and a 30-minute dwell time at each extreme temperature. Signals under test shall be non-operating.

5.4.3.3 Moisture Resistance: Moisture resistance testing shall be performed per MIL-STD-810F, Test Method 506.4, Procedure 1, Rain and Blowing Rain. The test shall be conducted on stand-alone modules, without a protective housing. The rainfall rate shall be 1.7 mm/min (4 in/hr) and droplet size shall predominantly between 0.5 mm and 4.5 mm (0.02 to 0.18 in). The modules shall be vertically oriented, such that the lens is directed towards the wind source when at a zero rotation angle. The module shall be rotated at a rate of 4 degrees per minute along the vertical axis, from an orientation of -60 to +60 degrees during the test. The duration of the test shall be 30 minutes. The modules shall be energized throughout the test. The water shall be at 20°C ± 5° (77°F ± 9°). The wind velocity shall be 80 km/hr (50 mph). If the module is equipped with a remote power supply unit, then the test shall be conducted with the remote power supply unit attached to the clamping device holding the module to the test apparatus.

5.4.3.4 Environmental Tests Evaluation: At the conclusion of the Environmental Tests, all the modules will be visual inspected for damage and energized to insure proper operation.

5.4.3.5 Acceptance/Rejection Criteria: The loosening of the lens, or any internal components, or evidence of other physical damage, such as cracking of the module lens or housing, or presence of internal moisture, or failure to operate correctly after testing shall be considered a failure of the design.

5.4.4 Photometric & Colorimetric Tests: Three of the modules that were subjected to the Environmental Tests shall undergo Photometric & Colorimetric Tests. Unless otherwise specified, these tests shall be performed with the modules energized at nominal operating voltage.

5.4.4.1 Luminous intensity at standard temperature: The modules shall be tested for compliance with the requirements for minimum maintained luminous intensity at a temperature of 25^0C (77^0F). Measurements shall be made for all angular combinations specified in VTCSH Table 1, or at other angles, as specified by the purchaser.

5.4.4.1.1 Luminous intensity measurements for red and green signal modules shall be made after the signal module has been operated under the test conditions for a minimum of 60 minutes at 100% duty cycle.

5.4.4.1.2 Luminous intensity measurements for yellow signal modules shall be made after the module has been operated under the test conditions for a minimum of 60 minutes at a 12.5% duty cycle (5 seconds ON and 35 seconds OFF). Readings shall be taken at the end of the 5-second ON interval, or as close to the end of the ON interval as possible.

5.4.4.2 Luminous intensity at low voltage: The modules shall be tested for compliance with the requirements for minimum maintained luminous

intensity when operated at 80 VAC at a temperature of 25^0C (77^0F). A single-point correlation measurement of the luminous intensity, in the region from 0 to 7.5 degrees down, and from 7.5 degrees left to 7.5 degrees right shall be recorded. The single-point measurement shall be correlated to the measurement made in the same direction under VTCSH Section 6.4.4.1 to generate a full range of luminous intensity values at reduced voltage. The luminous intensity measurement at reduced voltage shall be made immediately following measurements for luminous intensity at standard temperature (VTCSH Section 6.4.4.1).

5.4.4.3 Luminous intensity at elevated voltage: The modules shall be tested for compliance with the requirements for minimum maintained luminous intensity when operated at 135 VAC at a temperature of 25^0C (77^0F). A single-point correlation measurement of the luminous intensity, in the region from 0 to 7.5 degrees down, and from 7.5 degrees left to 7.5 degrees right shall be recorded. The single-point measurement shall be correlated to the measurement made in the same direction under section VTCSH Section 6.4.4.1 to generate a full range of luminous intensity values at elevated voltage. The luminous intensity measurement at elevated voltage shall be made immediately following measurements for luminous intensity at reduced voltage (VTCSH Section 6.4.4.2).

5.4.4.4 Luminous intensity at high temperature: The red and green modules shall be tested for compliance with the requirements for minimum maintained luminous intensity at a temperature of 74^0C (165^0F). The modules shall be mounted in a temperature chamber so that the lens is outside the chamber and all portions behind the lens are within the chamber at a temperature of 74ºC (165ºF). The air temperature in front of the lens shall be maintained at a minimum of 49^0C (120^0F) during all tests. A single-point correlation measurement of the luminous intensity, in the region from 0 to 7.5 degrees down, and from 7.5 degrees left to 7.5 degrees right shall be recorded. The single-point measurement at shall be factored to the 25^0C (77^0F) measurement made in the same direction under VTCSH Section 6.4.4.1 to generate a full range of luminous intensity values at high temperature.

5.4.4.4.1 Luminous intensity measurements for red and green signal modules shall be made after the module has been operated under the test conditions for a minimum of 60 minutes at a 100% duty cycle.

5.4.4.4.2 Luminous intensity measurements for yellow signal modules shall be made after the module has been operated under the test conditions for a minimum of 60 minutes at a 12.5% duty cycle (5 seconds ON and 35 seconds OFF). Readings shall be taken at the end of the 5-second ON interval, or as close to the end of the ON interval as possible.

5.4.4.5 Luminance uniformity: The modules shall be tested for compliance with the requirements for luminance uniformity at a temperature of 25ºC (77ºF). Measurements shall be made using a luminance meter located on the physical axis of the module lens at a distance such that the selected aperture samples a spot size of 25mm (1 inch) at the lens surface. The position of the luminance meter shall be translated from side to side and up and down, so as to sample the entire emitting surface of the module. The highest and lowest values of luminance shall be

recorded. The measurements may be made immediately following measurements for luminous intensity at standard temperature and elevated voltage (VTCSH Section 6.4.4.3), after returning the voltage to the nominal operating voltage (120VAC).

5.4.4.5.1 Luminance uniformity measurements for the green and red signals must be made with the signal module operating at a 100% duty cycle. Therefore, it is necessary for the signal module under test to reach thermal equilibrium, and for the output to be stable prior to taking measurements.

5.4.4.5.2 Measurement for yellow signal modules shall be made after the module has been operated under the test conditions for a minimum of 60 minutes at a 12.5% duty cycle (5 seconds ON and 35 seconds OFF). Readings shall be taken at the end of the 5-second ON interval, or as close to the end of the ON interval as possible.

5.4.4.6 Chromaticity: The chromaticity of the emitted light from modules shall be measured at a temperature of 25ºC (77ºF). A spectra-radiometer with a maximum bandwidth of 4nm, or a colorimeter that has a measurement uncertainty of less that 2.5% over the emission spectra of the module, shall be used for this measurement. The spectra-radiometer or colorimeter shall be located on the physical axis of the module lens at a distance such that the selected aperture samples a spot size of 25mm (1 inch) at the lens surface. The meter shall be translated from side to side and up and down, so as to sample a minimum of nine equally distributed positions about the emitting surface of the module. The colorimetric values of the emitted light at each of the nine positions shall be recorded, and an average value calculated, based on the CIE Standard 2º Observer. These measurements may be made for luminance uniformity (VTCSH Section 6.4.4.5).

5.4.4.6.1 Chromaticity measurements must be made with the signal module operating at a 100% duty cycle. Therefore, it is necessary for the signal module under test to reach thermal equilibrium, and for the output to be stable prior to taking measurements.

5.4.4.6.2 Measurements for yellow signal modules shall be made after the module has been operated under the test conditions for a minimum of 60 minutes at a 12.5% duty cycle (5 seconds ON and 35 seconds OFF). Readings shall be taken at the end of the 5-second ON interval, or as close to the end of the ON interval as possible.

5.4.4.7 Color uniformity: The average and nine individual sets of chromaticity values of each module under evaluation shall be plotted on the CIE 1931 Chromaticity Diagram (see VTCSH Figure 1).

5.4.4.8 Photometric & Colorimetric Tests Evaluation: At the conclusion of the Photometric & Colorimetric Tests, the measurement data shall be compared to the applicable requirements of VTCSH Section 4.1 and VTCSH Section 4.2.

5.4.4.9 Acceptance/Rejection Criteria: The failure of any module to meet the requirements for minimum maintained luminous intensity (VTCSH Section 4.1.1) or maximum permissible luminous intensity (VTCSH Section 4.1.2) under standard and high temperatures, the requirement for

luminance uniformity (VTCSH Section 4.1.3) and/or the appropriate requirement for chromaticity (VTCSH Section 4.2) shall be considered a failure of the proposed design.

5.4.5 Lens Tests: Following the Photometric & Colorimetric Tests, the three modules shall be subjected to the following tests of the acceptability of the lens construction.

5.4.5.1 UV Stabilization: Documentation shall be provided that certifies that the loss of direct transmission through the lens shall not cause the performance of the module to fall below the photometric requirements, or deviate from the colorimetric requirements of the specification after 60 months, or greater as specified by the manufacturer, of service in accordance with VTCSH Section 3.3.1 and VTCSH Section 3.3.4. Documentation shall be provided for hard-coat film if used, tinting film or material (if used) and lens material.

5.4.5.2 Lens Abrasion Test: Abrasion resistance testing of the module lens shall be performed as follows:

a) A lens shall be mounted in the abrasions test fixture with the lens facing upwards.

b) An abrading pad meeting the requirements in paragraphs c) through f) below shall be cycled back and forth (1 cycle) for 12 cycles at 10 cm ± 2cm per second over the whole surface of the lens.

c) The abrading pad shall be not less than 2.5cm ± 0.1cm square, constructed of 0000 steel wool and rubber, cemented to a rigid base shaped to the same contour as the lens. The “grain” of the pad shall be perpendicular to the direction of motion.

d) The abrading pad support shall be equal in size to the pad and the center of the support surface shall be within ± 2mm of parallel to the lens surface.

e) The density of the abrading pad shall be such that when the pad is mounted to its support and is resting un-weighted on the lens, the base of the pad shall be no closer than 3.2mm to the lens at its closest point.

f) When mounted on its support and resting on the lens, the abrading pad shall be weighted such that a pad pressure of 14 kPa ± 1kPa exists at the center and perpendicular to the face of the lens.

g) A pivot shall be used if required to follow the contour of the lens.

h) Unused steel wool shall be used for each test.

5.4.5.3 Acceptance/Rejection Criteria: The photometric performance of a module following the lens abrasion test shall be 90% or more of the photometric performance of the same module measured prior to the lens abrasion test. A single point correlation as described in paragraph VTCSH Section 6.4.4.4 may be used to determine the change in photometric performance. Failure of any module to meet the requirement for photometric performance following the lens abrasion test shall be considered a failure of the proposed design.

5.4.6 Electrical Tests: Three of the modules that were subjected to the environmental Tests shall undergo Electrical Tests. These tests shall be performed with the modules energized at nominal operating voltage and at a standard temperature of 25ºC (77ºC), unless specified otherwise.

5.4.6.1 Current Consumption: The current flow, in Amperes, shall be measured at various ambient temperatures across the span of the operating temperature range specified in VTCSH Section 3.3.2 The manufacturer shall provide information (charts, tables and/or graphs) on the variations in current through 60 months of service, or greater as specified by the manufacturer, within operating temperature range of VTCSH Section 3.3.2. In addition, the current consumption at start-up shall be measured at 25ºC (77ºF) to establish the reference value used for Production Quality Assurance (VTCSH Section 6.3.4).

5.4.6.2 Low-Voltage Turn-OFF: The modules shall be connected to a variable power supply, and energized at nominal operating voltage. The applied voltage shall be reduced to a point where there is no visible illumination from the module when the background is at an average luminance of 0.1 cd/m^2 (0.01 ft-cd).

5.4.6.3 Turn-ON/Turn-OFF Times: Using a two-channel oscilloscope, the time delay between application of normal operating voltage and the module reaching 90% of full light output, and the time delay between de-energizing the module and the light output dropping to 0% of full output, shall be measured.

5.4.6.4 Transient Voltage Immunity: The modules shall be tested for transient immunity using the procedure described in Section 2.1.8, NEMA Standard TS 2-1998.

5.4.6.5 Electronic Noise: The modules shall be tested for conformance with the requirements of a Class A digital device, as specified in FCC Title 47, Subpart B, Section 15.109(b).

5.4.6.6 Power Factor: The power factor for the modules shall be measured and recorded. A commercially available power factor meter may be used to perform this measurement.

5.4.6.7 Total Harmonic Distortion (THD): The THD induced into an AC power line by the modules shall be measured and recorded. A commercially available THD meter may be used to perform this measurement.

5.4.6.8 Electrical Tests Evaluation: At the conclusion of the Electrical Tests, the measurement data shall be compared to the requirements of VTCSH Section 5.2 through VTCSH Section 5.5.

5.4.6.9 Acceptance/Rejection Criteria: The failure of any module to meet the requirements for low-voltage turn-OFF (VTCSH Section 5.2.4), turn-ON/turn-OFF times (VTCSH Section 5.2.5), transient voltage immunity (VTCSH Section 5.3), emission of electronic noise (VTCSH Section 5.4), minimum power factor (VTCSH Section 5.5.1), and/or maximum total harmonic distortion (VTCSH Section 5.5.2) shall be considered a failure of the proposed design.

5.4.7 Controller Assembly Compatibility Tests: Following the Electrical Tests, three modules shall be tested for compatibility with load current switches and conflict monitors presently in service. The manufacturer shall test the design for the specific type signal control unit with which the design is intended to be compatible.

5.4.7.1 Load Switch Compatibility: The modules shall be tested for compatibility and proper operation with load current switches. Each module shall be connected to a variable AC voltage supply. The AC line current into the module shall be monitored for sufficient current draw to ensure proper load switch operation while the voltage is varied from 80 to 135 VAC.

5.4.7.2 Off State Voltage Decay Test: Each module shall be operated from a 135 VAC voltage supply. A 19.5 kΩ resistor shall be wired in series in the hot line between the module and the AC power supply. A single-pole-single-throw switch shall be wired in parallel with the 19.5 kΩ resistor. A 220 kΩ shunt resistor shall be wired between the hot line connection and the neutral line connection on the module. Conflict monitor Off state impedance compatibility shall be tested by measuring the voltage decay across the 220 kΩ shunt resistor as follows: The single-pole-single-throw switch shall be closed, bypassing the 19.5 kΩ resistor and allowing the AC power supply to energize the module. Next, the switch shall be opened and the voltage across the 19.5 kΩ shunt resistor shall be measured for decay to a value equal to or less than 10 VAC RMS. The test shall be repeated 10 times, with the longest decay time recorded as the final test value.

5.4.7.3 Controller Assembly Compatibility Tests Evaluation: At the conclusion of the Controller Assembly Compatibility Tests, the measurement data shall be compared to the requirements of VTCSH Section 5.6.

5.4.7.4 Acceptance/Rejection Criteria: Failure of the module to draw sufficient current to ensure compatibility with the load current switches in appropriate Controller Assembly (VTCSH Section 5.6.1) and/or failure of the circuit voltage to decay to a value equal to or less than 10 VAC RMS within a time period equal to or less than 100 milliseconds (VTCSH Section 5.6.2) shall be considered a failure of the proposed design.

5.4.8 Failed State Impedance Test: The modules shall be tested for compliance with the requirement for provision for failed-state impedance (VTCSH Section 5.7). The test is conducted in two parts: first the module is energized with the LED load disconnected from the power supply to establish the failed-state impedance. Next, the requirement for the failed state impedance is tested. The module shall be operated from a 120 VAC voltage supply.

Wire a 50 kΩ resistor in series with the hot line between the module and the AC power supply. A 100 kΩ shunt resistor shall be wired between the hot line connection and the neutral line connection on the module. A single-pole-single-throw switch shall be wired in parallel with the 50 kΩ resistor. With the switch in the closed position and the LED load disconnected from the module power supply, energize the module for 300ms to establish the failed state impedance (VTCSH Section 5.7).

The second part of the failed state impedance test is conducted to insure that the appropriate failed state impedance is established. The switch is opened and the circuit is energized by the 120VAC voltage supply. The voltage across the 100 kΩ shunt resistor shall be continuously monitored. The voltage shall decay to a value equal to or greater than 70 VAC RMS. For the continuous interval of 500 ms through 1500 ms, after energizing the circuit with an open switch, the measured voltage shall be 70 VAC RMS or greater. The second part of the test shall be repeated to times, with the minimum voltage recorded during the

continuous interval of 500 ms through 1500 ms, after energizing the circuit with an open switch, recorded as the final test value.

5.4.8.1 Acceptance/Rejection Criteria: Failure of the circuit voltage to remain at a value equal to or greater than 70 VAC RMS for the continuous time interval of 500 ms through 1500 ms, after energizing the circuit with an open switch, shall be considered a failure of the proposed design.

6.0 WARRANTY

6.1 Warranty

6.1.1 LED modules shall be replaced or repaired if an LED module fails to function as intended due to workmanship or material defects within the first 60 months from the date of delivery.

6.1.2 LED modules that exhibit luminous intensities less than the minimum values specified in VTCSH Section 3.0 within the first 60 months of the date of delivery, shall be replaced or repaired.

7.0 INDEPENDENT LAB REPORT

7.1 An independent lab report verifying ITE compliance shall include:

- Conditioning
- Mechanical Vibration
- Temperature Cycling: Temperature cycling shall be performed per MIL-STD-883, Test method 1010
- Moisture Resistance: Moisture resistance testing shall be performed per MIL-STD-810F, Test Method 506.4, Procedure I, Rain and Blowing Rain
- Photometric & Colorimetric Tests
- Lens Abrasion Resistance
- Current Consumption
- Low-Voltage Turn-OFF
- Turn-ON/Turn-OFF Times
- Transient Voltage Immunity
- Electronic Noise
- Power Factor
- Total Harmonic Distortion (THD)
- Load Switch Compatibility
- Offstate Voltage Decay

- Failed State Impedance Test

APPENDIX 1A (200mm, 8-inch)

Minimum maintained luminous intensity requirements

Vertical Angle	Horizontal Angle	Luminous Intensity (candela)					
		Red (ITE)	Red 160%	Green (ITE)	Green 125%	Yellow (ITE) *	Yellow 150%*
+12.5	2.5	17	27	22	28	41	62
	7.5	13	21	17	21	33	50
+7.5	2.5	31	50	41	51	78	117
	7.5	25	40	32	40	62	93
	12.5	18	29	24	30	45	59
+2.5	2.5	68	109	88	110	168	252
	7.5	56	90	73	91	139	209
	12.5	38	61	49	61	94	141
	17.5	21	34	28	35	53	80
	22.5	12	19	15	19	29	44
-2.5	2.5	162	259	211	264	402	603
	7.5	132	211	172	215	328	492
	12.5	91	146	118	148	226	339
	17.5	53	85	69	86	131	197
	22.5	28	45	37	46	70	105
	27.5	15	24	19	24	37	56
-7.5	2.5	127	203	166	208	316	474
	7.5	106	170	138	173	262	393
	12.5	71	114	92	115	176	264
	17.5	41	66	54	68	103	155
	22.5	21	34	28	35	53	80
	27.5	12	19	15	19	29	44
-12.5	2.5	50	80	65	81	123	185
	7.5	40	64	52	65	98	147
	12.5	28	45	37	46	70	105
	17.5	17	27	22	28	41	62
	22.5	8	13	11	14	21	32
	27.5	5	8	6	8	12	18
-17.5	2.5	23	37	30	38	57	86
	7.5	18	29	24	30	45	68
	12.5	13	21	17	21	33	50
	17.5	7	11	9	11	16	24
	22.5	3	5	4	5	8	12
-22.5	2.5	17	27	22	28	41	62
	7.5	13	21	17	21	33	50
	12.5	10	16	13	16	25	38
	17.5	5	8	6	8	12	18
-27.5	2.5	12	19	15	19	29	44
	7.5	8	13	11	14	21	32

APPENDIX 1B (300mm, 12-inch)

Minimum maintained luminous intensity requirements

Vertical Angle	Horizontal Angle	Luminous Intensity (candela) 300 mm (12 inch)					
		Red (ITE)	Red 160%	Green (ITE)	Green 125%	Yellow (ITE) *	Yellow 150% *
+12.5	2.5	37	59	48	60	91	137
	7.5	29	46	38	48	73	110
+7.5	2.5	69	110	90	113	173	260
	7.5	55	88	71	89	137	206
	12.5	40	64	52	65	100	150
+2.5	2.5	150	240	195	244	373	560
	7.5	124	198	162	203	309	464
	12.5	84	134	109	136	209	314
	17.5	47	75	62	78	118	177
	22.5	26	42	33	41	64	96
-2.5	2.5	358	573	466	583	892	1338
	7.5	292	467	380	475	728	1092
	12.5	201	322	261	326	501	752
	17.5	117	187	152	190	291	437
	22.5	62	99	81	101	155	233
	27.5	33	53	43	54	82	123
-7.5	2.5	281	450	366	458	701	1052
	7.5	234	374	304	380	582	873
	12.5	157	251	204	255	391	587
	17.5	91	146	119	149	228	342
	22.5	47	75	62	78	118	177
	27.5	26	42	33	41	64	96
-12.5	2.5	110	176	143	179	273	410
	7.5	88	141	114	143	218	327
	12.5	62	99	81	101	155	233
	17.5	37	59	48	60	91	137
	22.5	18	29	24	30	46	69
	27.5	11	18	14	18	27	41
-17.5	2.5	51	82	67	84	127	191
	7.5	40	64	52	65	100	150
	12.5	29	46	38	48	73	110
	17.5	15	24	19	24	36	54
	22.5	7	11	10	13	18	27
-22.5	2.5	37	59	48	60	91	137
	7.5	29	46	38	48	73	110
	12.5	22	35	29	36	55	83
	17.5	11	18	14	18	27	41
-27.5	2.5	26	42	33	41	64	96
	7.5	18	29	24	30	46	69

APPENDIX 2

Chromaticity

Red: $y = 0.308$;
$y = 0.953 – 0.947x$;
$y = 0.290$:

Point	Red x	Red y
1	0.692	0.308

2	0.681	0.308
3	0.700	0.290
4	0.710	0.290

Yellow*: $y = 0.151 + 0.556x$;
$y = 0.972 – 0.976x$;
$y = 0.235 + 0.300x$:

	Yellow	
Point	*x*	*y*
1	0.545	0.454
2	0.536	0.449
3	0.578	0.408
4	0.588	0.411

*Yellow Measured at T_a = 25°C, preheat of 60 minutes (Cycling 5 sec ON, 35 sec Off)

Green: $y = 0.655 - 0.831x$
$x = 0.150$;
$y = 0.422 - 0.278x$:

	Green	
Point	*x*	*y*
1	0.005	0.651
2	0.150	0.531
3	0.150	0.380
4	0.022	0.416

SECTION 4

12” LED Vehicle Arrow Traffic Signal Modules

Omni Directional Arrows Purchase Specification

LED Traffic Signal Modules

300mm (12 in.)

1.0 PURPOSE

The purpose of this specification is to provide the minimum in-service performance requirements for 300 mm (12 in) LED vehicle arrow traffic signal modules. This specification refers to definitions and practices described in “Vehicle Traffic Control Signal Heads - Light Emitting Diode (LED) Vehicle Arrow Traffic Signal Supplement, Adopted July 1, 2007”, referred to in this document as "VTCSH". All lamps shall be fully compliant to ITE requirements and shall be affixed with an ETL Verified label to

demonstrate compliance to Section 6.3 (Production Tests & Inspections) of the latest ITE VTCSH Arrow specifications.

The multiple LED light source should be the latest technology available on the market. Only Red, Yellow and Green color emitting LED shall be utilized in the respective lamps. Mixtures of LEDs emitting different colors in a lamp is not permitted.

2.0 PHYSICAL AND MECHANICAL REQUIREMENTS

2.1 General

LED traffic signal modules are designed, as retrofit replacements for existing signal lamps shall not require special tools for installation. Retrofit replacement LED modules shall fit into existing traffic signal housings built to the VTCSH Standard without modification to the housing.

Installation of a retrofit replacement LED signal module into an existing signal housing shall only require the removal of the following existing components: lens, lamp module, reflector and gaskets.

The module shall be weather tight and fit securely in the housing and connect directly to existing electrical wiring.

2.2 LED Signal Module

2.2.1 The retrofit LED module shall be capable of replacing the optical unit.

2.2.2 The lens shall be clear for red, yellow and green arrow modules. Tinting of any color is not permitted.

2.2.3 The LED module external lens shall be capable of being replaced without special tools, independent of replacing the complete LED module.

2.2.4 The LED module lens shall be hard coated or otherwise made to comply with material exposure and weathering effects requirements per SAE J576

2.2.5 The general configuration of the arrow icon is illustrated in Figure 1. The arrow should be oriented in the direction of its intended use. LED vehicle arrow traffic signal modules shall be manufactured to be used as omni directional modules.

2.3 Environmental Requirements

2.3.1 The LED module shall be rated for use in the ambient operating temperature range measured at the exposed rear of the module, of -40 to +74°C (-40 to +165°F) according to MIL-STD-883, test method 1010.

2.3.2 A module shall be protected against dust and moisture intrusion, including rain and blowing rain according to MIL-STD-810F, test method 506.4, procedure 1, Rain and Blowing Rain.

2.3.3 The module lens shall be made of a UV stabilized material to prevent cracking, crazing or yellowing due to UV irradiation.

2.3.4 The external lens shall be smooth on the outside to prevent excessive dirt/dust buildup and the LED module shall be specifically designed to reduce sun reflections (Sun Phantom).

2.3.5 The LED module shall be supplied with an installed gasket.

2.4 Construction

2.4.1 The LED module shall be a single, self-contained device, not requiring on-site assembly for installation into an existing traffic signal housing. The power supply must fit and mount inside the LED module.

2.4.2 The assembly and manufacturing process for the LED assembly shall be designed to ensure all internal LED and electronic components are adequately supported to withstand mechanical shock and vibration from high winds and other sources.

2.4.3 To ensure the unit meets required environmental standards (including water tightness), the unit shall be sealed by use of an O-ring gasket compressed radially or permanently sealed in production. Lens' attached to housing with screws shall not be used.

2.4.4 All LED module shall be compliant with Shipping Test ISTA 1A-2001 (Vibration and drop test). Third party test results are required.

2.5 Materials

2.5.1 Materials used for the lens and LED module construction shall conform to ASTM specifications, where applicable.

2.5.2 Enclosures containing the power supply and electronic components of the LED module shall be made of UL94 flame retardant materials. The lens of the LED module is excluded from this requirement.

2.6 Module Identification

2.6.1 Each LED module shall be identified on the backside with the manufacturer's name, serial number and country of origin.

2.6.2 The following operating characteristics shall be identified: nominal operating voltage, power consumption, and Volt-Ampere.

2.6.3 Omni-Directional modules shall be clearly marked with the phrase “Suitable for mounting in any orientation” & removable lenses shall be keyed to only be installed in the correct orientation.

3.0 PHOTOMETRIC REQUIREMENTS

3.1 Luminous Intensity & Distribution

3.1.1 The maintained minimum luminous intensity values for the LED modules throughout the warranty period and at the end of the warranty period, under the operating conditions defined in Sections 2.3.1, and 4.2.1, shall not be less than the values shown in Appendix 1.

3.1.2 To allow for inherent technology light depreciation over time and to compensate for high ambient temperature (+74°C, +165°F), manufacturer shall provide initial (Time = 0) intensity values by color as follows: Red = 130%, Green = 130%, Yellow = 125%.

3.1.2 The maximum permissible luminous intensity within the temperature range shall not exceed three times the required peak value of the minimum maintained luminous intensity for the selected signal size and color as per Appendix 1.

3.1.3 The uniformity of the signal output across the entire module shall not exceed a ratio of 10 to 1 between the maximum and minimum luminance values (cd/m^2).

3.1.4 The LED module shall have a visual appearance similar to that of an incandescent lamp (ie: Smooth and non-pixilated).

3.2 Chromaticity

3.2.1 The measured chromaticity coordinates of the LED modules shall conform to the chromaticity requirements seen in Appendix 2.

3.2.2 The dominant wavelength for any individual color measurement of a portion of the emitting surface of a module, shall be within ±3 nm of the dominant wavelength for the average color measurement of the emitting surface as a whole.

4.0 ELECTRICAL

4.1 General

4.1.1 All wiring and terminal blocks shall meet or exceed the requirements of VTCSH Section 5.1. Two secured, color coded, minimum 39in long 600 V, 16 AWG minimum, jacketed wires, conforming to the NFPA 70, National Electrical Code, and rated for service at +105°C, are to be provided for electrical connection..

4.2 Voltage Range

4.2.1 LED modules shall operate from a 60 ± 3 Hz AC power line over a voltage range from 80 to 135 VAC RMS.

4.2.2 Nominal operating voltage for all measurements shall be 120 ± 3 Volts rms.

4.2.3 Fluctuations in line voltage over the range of 80 to 135 Vac shall not affect luminous intensity by more than ± 10 %.

4.2.4 The LED circuitry shall prevent flickering at less than 100 Hz over the voltage range specified in Section 4.2.1.

4.2.5 Low Voltage Turn Off: There shall be no illumination from the module when the applied voltage is less than 35 VAC.

4.2.6 Turn-On and Turn-Off Time: The modules shall reach 90% of their full illumination (turn-on) within 75 ms after the application of the nominal operating voltage. The LED modules shall not be illuminated (turn-off) within 75 ms after the removal of the nominal operating voltage. This shall be validated by an independent lab report by a third party testing laboratory.

4.3 Transient Voltage Protection (To be confirmed by the end of October 2007)

4.3 The LED module on-board circuitry shall include voltage surge protection to withstand high-repetition noise transients and low-repetition, high-energy transients as stated in NEMA Standard TS-2-2003 Section 2.1.8

In addition the module shall withstand the following surge immunity tests

- Sec 2.1.6 NEMA TS-2-2003, 300V, 2500W
- Sec 2.1.6 NEMA TS-2-2003, 600V, 10 microfarads
- IEC 1000-4-5 & ANSI/IEEE C62.41.2-2002, 3kV, 2 ohms
- IEC 1000-4-12 & ANSI/IEEE C62.41.2-2002, 6 kV, 30 ohms

4.4 LED Drive Circuitry

4.4.1 The shut down circuit should be triggered by the absence of LED current and not by measuring the output voltage across the LEDs.

4.4.2 The power supply must be current regulated.

4.5 Electronic Noise

The LED signal shall meet the requirements of the FCC Title 47, Subpart B, section 15 regulations concerning the emission of electronic noise for class A digital devices.

4.6 Power Factor (PF) and AC Harmonics

4.6.1 LED modules shall provide a power factor of 90% or greater when operated at nominal operating voltage and 25°C (77°F).

4.6.2 Total harmonic distortion induced into an AC power line by an LED signal module, operated at nominal operating voltage and 25°C (77°F) shall not exceed 20%.

4.7 Failed State Impendence

The LED module shall be designed to detect catastrophic loss of the LED load. Upon sensing of the LED load, the module shall present a resistance of at least 250 Kohms across the input power leads within 300 msec. The Led light source will be said to have failed catastrophically if it fails to show any visible illumination when energized according to Section 4.2.1 after 75 msec.

4.8 Controller assembly Compatibility

4.8.1 The current draw shall be sufficient to ensure compatibility and proper triggering and operation of load current switches and conflict monitors in signal controller units.

4.8.2 Off State Voltage Decay: When the module is switched from the on state to the off state, the terminal voltage decay to a value less than 10 VAC RMS in less that 100 msec when driven by a maximum allowed load switch leakage current of 10 mA peak (7.1 milliamps AC).

5.0 QUALITY ASSURANCE

5.1 General

5.1.1 Quality Assurance Program: LED modules shall be manufactured in accordance with a vendor quality assurance (QA) program. The QA

program shall include two types of quality assurance: (1) design quality assurance, and (2) production quality assurance. The production quality assurance shall include statistically controlled routine tests to ensure minimum performance levels of LED modules built to meet this specification.

5.1.2 Record Keeping: QA process and test result documentation shall be kept on file, and available for viewing, for a minimum period of seven years following production of the last production unit.

5.1.3 Conformance: LED module designs not satisfying design qualification testing and the production quality assurance testing performance requirements in Sections 5.3 and 5.4 shall not be labeled, advertised, or sold as conforming to this specification.

5.1.4 ISO 9001:2000: Compliance: LED module manufacturer must present upon request the ISO 9001:2000 certificate of conformance.

5.1.5 Independent Lab Testing: All lab report results shall be provided from an independent third party testing facility with randomly picked production units clearly indicating module serial numbers and production date codes.

5.2 Module Identification

5.2.1 Each LED module shall be identified with the manufacturer's name, model, operating characteristics and serial number. The operating characteristics shall include the nominal operating voltage, the stabilized power consumption and the nominal current draw in Watts, Volt-Amperes and Amperes, respectively.

5.3 Production Tests & Inspections

All lamps manufactured shall be affixed with an Intertek ETL Verified label to demonstrate compliance to Section 6.3 (Production Tests & Inspections) of the latest ITE VTCSH Arrow Specification, dated July 1, 2007.

5.3.1 Production Test Requirement: All new LED modules tendered for sale shall undergo the following Production Test and Inspection prior to shipment. Failure of a module to meet requirements of these Production Test and Inspection shall be cause for rejection. Test results shall be maintained for a period of 7 years following the production of the last production unit.

5.3.2 Luminous Intensity: All LED modules shall be tested for maintained minimum luminous intensity. A single point measurement with a correlation to the intensity requirements referred to in Section 3.0 may

be used. The LED module shall be operated at nominal operating voltage and at an ambient temperature of 25°C (77°F).

5.3.3 Power Factor: All LED modules shall be tested for power factor per the requirements of Section 4.6.1. A commercially available power factor meter may be used to perform this measurement.

5.3.4 Current: All LED modules shall be measured for current flow in Amperes. The measured current values shall be compared against those resulting from design qualification measurements in Section 5.4.6.1. Measured current values in excess of 120% of the design qualification current values shall be cause for rejection.

5.3.5 Visual Inspection: All LED modules shall be visually inspected for any exterior physical damage or assembly anomalies.

5.4 Design Qualification Testing

5.4.1 Design Qualification Test Requirements. Design qualification testing shall be performed on new module designs, when a major design change has been implemented on an existing design, or after every 5 years that a design is in service. Modules used in design qualification testing shall be representative of the manufacturer's proposed normal production. If modules are provided with both clear and tinted lenses, the tests detailed below shall be conducted for all lens types. The certification of UV Stabilization (VTCSH Section 6.4.5.1) shall be provided for all materials used in or on the emitting lenses.

5.4.1.1 The manufacturer shall retain test data in accordance with VTCSH Section 6.1.2 or for 60 months following final production of a specific design, whichever is longer.

5.4.1.2 Six modules shall be used in Design Qualification Testing. All six modules shall be subjected to conditioning (VTCSH Section 6.4.2), followed by the Environmental Tests (VTCSH Section 6.4.3). Following the Environmental Tests, three modules shall undergo Photometric & Colorimetric Tests (VTCSH Section 6.4.4), followed by the Lens Tests (VTCSH Section 6.4.5). The remaining three modules shall undergo the Electrical Tests (VTCSH Section 6.4.6). Tests shall be conducted in the order described herein, unless otherwise specified. Figure 2 provides a flow chart for the Design Qualification Testing.

5.4.1.3 In order for a module design to be considered acceptable for marking with the label described in 3.6.3, all tested modules must comply with the acceptance/rejection criteria for the Environmental Tests (VTCSH Section 6.4.3), Photometric & Colorimetric Tests (VTCSH Section 6.4.4), Lens Tests (VTCSH Section 6.4.5), Electrical Tests (VTCSH Section 6.4.6), controller Assembly Compatibility Tests (VTCSH Section 6.4.7) and Failed State Impedance Test (VTCSH Section 6.4.8).

5.4.2 Conditioning: Modules shall be energized for a minimum of 24 hours, at 100% duty cycle, in an ambient temperature of +60°C (+140°F).

5.4.2.1 High Temperature High Humidity (HTHH): All Modules shall be tested for 1000 hours at 60°C temperature, 90% humidity using 100% Duty Cycle for the Red & Green and 12.5% Duty Cycle (5 sec on, 35 sec off) for the Yellow. Test results shall be provided to show compliance.

5.4.3 Environmental Tests:

5.4.3.1 Mechanical Vibration: Mechanical vibration testing shall be performed per MIL-STD-883, Test Method 2007, using three 4 minute cycles along each x, y and z axis, at a force of 2.5 Gs, with a frequency sweep from 2 Hz to 120 Hz.

5.4.3.2 Temperature Cycling: Temperature cycling shall be performed per MIL-STD-883, Test method 1010. The temperature range shall include the full ambient operating temperature range specified in VTCSH Section 3.3.2. A minimum of 20 cycles shall be performed with a 30-minute transfer time between extremes and a 30-minute dwell time at each extreme temperature. Signals under test shall be non-operating.

5.4.3.3 Moisture Resistance: Moisture resistance testing shall be performed per MIL-STD-810F, Test Method 506.4, Procedure 1, Rain and Blowing Rain. The test shall be conducted on stand-alone modules, without a protective housing. The rainfall rate shall be 1.7 mm/min (4 in/hr) and droplet size shall predominantly between 0.5 mm and 4.5 mm (0.02 to 0.18 in). The modules shall be vertically oriented, such that the lens is directed towards the wind source when at a zero rotation angle. The module shall be rotated at a rate of 4 degrees per minute along the vertical axis, from an orientation of -60 to +60 degrees during the test. The duration of the test shall be 30 minutes. The modules shall be energized throughout the test. The water shall be at 20°C ± 5° (77°F ± 9°). The wind velocity shall be 80 km/hr (50 mph). If the module is equipped with a remote power supply unit, then the test shall be conducted with the remote power supply unit attached to the clamping device holding the module to the test apparatus.

5.4.3.4 Environmental Tests Evaluation: At the conclusion of the Environmental Tests, all the modules will be visual inspected for damage and energized to insure proper operation.

5.4.3.5 Acceptance/Rejection Criteria: The loosening of the lens, or any internal components, or evidence of other physical damage, such as cracking of the module lens or housing, or presence of internal moisture, or failure to operate correctly after testing shall be considered a failure of the design.

5.4.4 Photometric & Colorimetric Tests: Three of the modules that were subjected to the Environmental Tests shall undergo Photometric & Colorimetric Tests. Unless otherwise specified, these tests shall be performed with the modules energized at nominal operating voltage.

5.4.4.1 Luminous intensity at standard temperature: The modules shall be tested for compliance with the requirements for minimum maintained luminous intensity at a temperature of 25^0C (77^0F). Measurements shall be made for all angular combinations specified in VTCSH Table 1 or 3, as appropriate, or at other angles, as specified by the purchaser.

5.4.4.1.1 Luminous intensity measurements for red and green signal modules shall be made after the signal module has been operated under the test conditions for a minimum of 60 minutes at 100% duty cycle.

5.4.4.1.2 Luminous intensity measurements for yellow signal modules shall be made after the module has been operated under the test conditions for a minimum of 60 minutes at a 12.5% duty cycle (5 seconds ON and 35 seconds OFF). Readings shall be taken at the end of the 5-second ON interval, or as close to the end of the ON interval as possible.

5.4.4.2 Luminous intensity at low voltage: The modules shall be tested for compliance with the requirements for minimum maintained luminous intensity when operated at 80 VAC at a temperature of 25°C (77°F). A single-point measurement of the luminous intensity shall be recorded, and correlated to the measurement made in the same direction under Section 6.4.4.1 to generate a full range of luminous intensity values at reduced voltage. For modules intended for use in a specific orientation, the single point measurement shall be taken in the region from 0 to 7.5 degrees down and from 7.5 degrees left to 7.5 degrees right. For omni directional modules, the single point measurement shall be taken in the region from 7.5 degrees up to 7.5 degrees down and from 7.5 degrees left to 7.5 degrees right. The luminous intensity measurement at reduced voltage shall be made immediately following measurements for luminous intensity at standard temperature (6.4.4.1).

5.4.4.3 Luminous intensity at elevated voltage: The modules shall be tested for compliance with the requirements for minimum maintained luminous intensity when operated at 135 VAC at a temperature of 25°C (77°F). A single-point measurement of the luminous intensity shall be recorded, and correlated to the measurement made in the same direction under Section 6.4.4.1 to generate a full range of luminous intensity values at elevated voltage. The single point measurement shall be taken in the region described in Section 6.4.4.2. The luminous intensity measurement at elevated voltage shall be made immediately following measurements for luminous intensity at reduced voltage (6.4.4.2).

5.4.4.4 Luminous intensity at high temperature: The modules shall be tested for compliance with the requirements for minimum maintained luminous intensity at a temperature of 74ºC (165ºF). The modules shall be mounted in a temperature chamber so that

the signal module lens is outside the chamber and all portions behind the lens are within the chamber at a temperature of 74ºC (165ºF). The air temperature in front of the lens of the signal shall be maintained at a minimum of 49°C (120°F) during all tests. A single-point measurement of the luminous intensity shall be recorded, and correlated to the 25°C (77°F) measurement made in the same direction under Section 6.4.4.1 to generate a full range of luminous intensity values at high temperature. The single point measurement shall be taken in the region described in Section 6.4.4.2.

5.4.4.4.1 Luminous intensity measurements for red and green signal modules shall be made after the module has been operated under the test conditions for a minimum of 60 minutes at a 100% duty cycle.

5.4.4.4.2 Luminous intensity measurements for yellow signal modules shall be made after the module has been operated under the test conditions for a minimum of 60 minutes at a 12.5% duty cycle (5 seconds ON and 35 seconds OFF). Readings shall be taken at the end of the 5-second ON interval, or as close to the end of the ON interval as possible.

5.4.4.5 Luminance uniformity: The modules shall be tested for compliance with the requirements for luminance uniformity at a temperature of 25°C (77°F). Measurements shall be made using a luminance meter located on the physical axis of the module lens at a distance such that the selected aperture samples a circular spot with a diameter of 12mm (0.5 inch) at the lens surface. The position of the luminance meter shall be translated from side to side and up and down, so as to sample the entire emitting surface of the module. The highest and lowest values of luminance shall be recorded. Luminance measurements may be made immediately following measurements for luminous intensity at standard temperature and elevated voltage (6.4.4.3), after returning the voltage to the nominal operating voltage (120VAC).

5.4.4.5.1 Luminance uniformity measurements for the green and red signals must be made with the signal module operating at a 100% duty cycle. Therefore, it is necessary for the signal module under test to reach thermal equilibrium, and for the output to be stable prior to taking measurements.

5.4.4.5.2 Measurement for yellow signal modules shall be made after the module has been operated under the test conditions for a minimum of 60 minutes at a 12.5% duty cycle (5 seconds ON and 35 seconds OFF). Readings shall be taken at the end of the 5-second ON interval, or as close to the end of the ON interval as possible.

5.4.4.6 Chromaticity: The chromaticity of the emitted light from modules shall be measured at a temperature of 25°C (77°F). A spectro-radiometer with a maximum bandwidth of 4nm, or a colorimeter that has a measurement uncertainty of less than 2.5%

over the emission spectra of the module, shall be used for this measurement. The spectro-radiometer or colorimeter shall be located on the physical axis of the module lens at a distance such that the selected aperture samples a circular spot with a diameter of 12mm (0.5 inch) at the lens surface. The meter shall be translated from side to side and up and down, so as to sample a minimum of nine equally distributed positions about the emitting surface of the module. The colorimetric values of the emitted light at each of the nine positions shall be recorded, and an average value calculated, based on the CIE Standard 2° Observer. These measurements may be made immediately following measurements for luminance uniformity (6.4.4.5).

5.4.4.6.1 Chromaticity measurements must be made with the signal module operating at a 100% duty cycle. Therefore, it is necessary for the signal module under test to reach thermal equilibrium, and for the output to be stable prior to taking measurements.

5.4.4.6.2 Measurements for yellow signal modules shall be made after the module has been operated under the test conditions for a minimum of 60 minutes at a 12.5% duty cycle (5 seconds ON and 35 seconds OFF). Readings shall be taken at the end of the 5-second ON interval, or as close to the end of the ON interval as possible.

5.4.4.7 Color uniformity: The average and nine individual sets of chromaticity values of each module under evaluation shall be plotted on the CIE 1931 Chromaticity Diagram (see VTCSH Figure 1).

5.4.4.8 Photometric & Colorimetric Tests Evaluation: At the conclusion of the Photometric & Colorimetric Tests, the measurement data shall be compared to the applicable requirements of Sections 4.1 and 4.2.

5.4.4.9 Acceptance/Rejection Criteria: The failure of a module to meet any of the following: the requirements for minimum maintained luminous intensity (4.1.1) or maximum permissible luminous intensity (4.1.2) under standard and high temperatures, the requirement for luminance uniformity (4.1.3), or the appropriate requirement for chromaticity (4.2) shall be considered a failure of the proposed design.

5.4.5 Lens Tests: Following the Photometric & Colorimetric Tests, the three modules shall be subjected to the following tests of the acceptability of the lens construction.

5.4.5.1 UV Stabilization: Documentation shall be provided that certifies that the loss of direct transmission through the lens shall not cause the performance of the module to fall below the photometric requirements, or deviate from the colorimetric requirements of this specification after 60 months, or greater as specified by the manufacturer, of service in accordance with 3.3.1

and 3.3.4. Documentation shall be provided for hard-coat film (if used), tinting film or material (if used) and lens material.

5.4.5.2 Lens Abrasion Test: Abrasion resistance testing of the module lens shall be performed as follows:

i) A lens shall be mounted in the abrasions test fixture with the lens facing upwards.

j) An abrading pad meeting the requirements in paragraphs c) through f) below shall be cycled back and forth (1 cycle) for 12 cycles at 10 cm ± 2cm per second over the whole surface of the lens.

k) The abrading pad shall be not less than 2.5cm ± 0.1cm square, constructed of 0000 steel wool and rubber, cemented to a rigid base shaped to the same contour as the lens. The “grain” of the pad shall be perpendicular to the direction of motion.

l) The abrading pad support shall be equal in size to the pad and the center of the support surface shall be within ± 2mm of parallel to the lens surface.

m) The density of the abrading pad shall be such that when the pad is mounted to its support and is resting un-weighted on the lens, the base of the pad shall be no closer than 3.2mm to the lens at its closest point.

n) When mounted on its support and resting on the lens, the abrading pad shall be weighted such that a pad pressure of 14 kPa ± 1kPa exists at the center and perpendicular to the face of the lens.

o) A pivot shall be used if required to follow the contour of the lens.

p) Unused steel wool shall be used for each test.

5.4.5.3 Acceptance/Rejection Criteria: The photometric performance of a module following the lens abrasion test shall be 90% or more of the photometric performance of the same module measured prior to the lens abrasion test. A single point correlation as described in 6.4.4.2 may be used to determine the change in photometric performance. The single point measurement shall be made at an ambient temperature of 25°C (77°F) and nominal voltage of 120VAC. Failure of any module to meet the requirement for photometric performance following the lens abrasion test shall be considered a failure of the proposed design.

5.4.6 Electrical Tests: Three of the modules that were subjected to the environmental Tests shall undergo Electrical Tests. These tests shall be performed with the modules energized at nominal operating voltage and at a standard temperature of 25ºC (77ºC), unless specified otherwise.

5.4.6.1 Current Consumption: The current flow, in Amperes, shall be measured at various ambient temperatures across the span of the operating temperature range specified in 3.3.1. The manufacturer shall provide information (charts, tables and/or graphs) on the variation in current through 60 months of service, or greater as specified by the manufacturer, within the operating temperature range of 3.3.2. In addition, the current consumption at start-up shall be measured at 25°C (77°F) to establish the reference value used for Production Quality Assurance (6.3.4).

5.4.6.2 Low-Voltage Turn-OFF: The modules shall be connected to a variable power supply, and energized at nominal operating voltage. The applied voltage shall be reduced to a point where there is no visible illumination from the module when the background is at an average luminance of 0.1 cd/m^2 (0.01 ft-cd).

5.4.6.3 Turn-ON/Turn-OFF Times: Using a two-channel oscilloscope, the time delay between application of normal operating voltage and the module reaching 90% of full light output, and the time delay between de-energizing the module and the light output dropping to 0% of full output, shall be measured.

5.4.6.4 Transient Voltage Immunity: The modules shall be tested for transient immunity using the procedure described in Section 2.1.8, NEMA Standard TS 2-2003.

5.4.6.5 Electronic Noise: The modules shall be tested for conformance with the requirements of a Class A digital device, as specified in FCC Title 47, Subpart B, Section 15.109(b).

5.4.6.6 Power Factor: The power factor for the modules shall be measured and recorded. A commercially available power factor meter may be used to perform this measurement.

5.4.6.7 Total Harmonic Distortion (THD): The total harmonic distortion induced into an AC power line by the modules shall be measured and recorded. A commercially available total harmonic distortion meter may be used to perform this measurement.

5.4.6.8 Electrical Tests Evaluation: At the conclusion of the Electrical Tests, the measurement data shall be compared to the requirements of Sections 5.2 through 5.5.

5.4.6.9 Acceptance/Rejection Criteria: The failure of any module to meet the requirements for low-voltage turn-OFF (5.2.4), turn-ON/turn-OFF times (5.2.5), transient voltage immunity (5.3), emission of electronic noise (5.4), minimum power factor (5.5.1), and/or maximum total harmonic distortion (5.5.2) shall be considered a failure of the proposed design.

5.4.7 Controller Assembly Compatibility Tests: Following the Electrical Tests, three modules shall be tested for compatibility with load current switches and conflict monitors presently in service. The manufacturer shall test the design for the specific type signal control unit with which the design is intended to be compatible.

5.4.7.1 Load Switch Compatibility: The modules shall be tested for compatibility and proper operation with load current switches. Each

module shall be connected to a variable AC voltage supply. The AC line current into the module shall be measured for sufficient current draw to ensure proper load switch operation while the voltage is varied from 80 to 135 VAC.

5.4.7.2 Off State Voltage Decay Test: Each module shall be operated from a 135 VAC voltage supply. A 19.5 kΩ resistor shall be wired in series in the hot line between the module and the AC power supply. A single-pole-single-throw switch shall be wired in parallel with the 19.5 kΩ resistor. A 220 kΩ shunt resistor shall be wired between the hot line connection and the neutral line connection on the module. Conflict monitor Off state impedance compatibility shall be tested by measuring the voltage decay across the 220 kΩ shunt resistor as follows: The single-pole-single-throw switch shall be closed, bypassing the 19.5 kΩ resistor and allowing the AC power supply to energize the module. Next, the switch shall be opened and the voltage across the 220 kΩ shunt resistor shall be measured for decay to a value equal to or less than 10 VAC RMS. The test shall be repeated 10 times, with the longest decay time recorded as the final test value.

5.4.7.3 Controller Assembly Compatibility Tests Evaluation: At the conclusion of the Controller Assembly Compatibility Tests, the measurement data shall be compared to the requirements of Section 5.6.

5.4.7.4 Acceptance/Rejection Criteria: Failure of the module to draw sufficient current to ensure compatibility with the load current switches in the appropriate Controller Assembly (5.6.1) and/or failure of the circuit voltage to decay to a value equal to or less than 10 VAC RMS within a time period equal to or less than 100 milliseconds (5.6.2) shall be considered a failure of the proposed design.

5.4.8 Failed State Impedance Test: The modules shall be tested for compliance with the requirement for provision of a failed-state impedance (5.7). The test is conducted in two parts: first the module is energized with the LED load disconnected from the power supply to establish the failed-state impedance. Next, the requirement for the failed state impedance is tested. The module shall be operated from a 120 VAC voltage supply.

Wire a 50 kΩ resistor in series with the hot line between the module and the AC power supply. A 100 kΩ shunt resistor shall be wired between the hot line connection and the neutral line connection on the module. A single-pole-single-throw switch shall be wired in parallel with the 50 kΩ resistor. With the switch in the closed position and the LED load disconnected from the module power supply, energize the module for 300ms to establish the failed state impedance (5.7.2).

The second part of the failed state impedance test is conducted to insure that the appropriate failed state impedance is established. The switch is opened and the circuit is energized by the 120VAC voltage supply. The voltage across the 100 kΩ shunt resistor shall be continuously monitored.

The voltage shall decay to a value equal to or greater than 70 VAC RMS. For the continuous interval of 500 ms through 1500 ms, after energizing the circuit with an open switch, the measured voltage shall be 70 VAC RMS or greater. The second part of the test shall be repeated 10 times, with the minimum voltage recorded during the continuous interval of 500 ms through 1500 ms, after energizing the circuit with an open switch, recorded as the final test value.

5.4.8.1 Failed State Impedance Test Evaluation: At the conclusion of the Failed State Impedance Test, the measurement data shall be compared to the requirement of Section 5.7.

5.4.8.2 Acceptance/Rejection Criteria: Failure of the voltage across the 100 kΩ shunt resistor to remain at a value equal to or greater than 70 VAC RMS for the continuous time interval of 500 ms through 1500 ms, after energizing the circuit with an open switch, shall be considered a failure of the proposed design.

6.0 WARRANTY

6.1 Warranty

6.1.1 LED modules shall be replaced or repaired if an LED module fails to function as intended due to workmanship or material defects within the first 60 months from the date of delivery.

6.1.2 LED modules that exhibit luminous intensities less than the minimum values specified in VTCSH Section 4.0 within the first 60 months of the date of delivery, shall be replaced or repaired.

7.0 INDEPENDENT LAB REPORT

7.1 An independent lab report verifying ITE compliance shall include:

- Mechanical Vibration
- Temperature Cycling: Temperature cycling shall be performed per MIL-STD-883, Test method 1010
- Moisture Resistance: Moisture resistance testing shall be performed per MIL-STD-810F, Test Method 506.4, Procedure I, Rain and Blowing Rain
- Photometric & Colorimetric Tests
- Current Consumption
- Low-Voltage Turn-OFF
- Turn-ON/Turn-OFF Times
- Transient Voltage Immunity
- Electronic Noise
- Power Factor

- Total Harmonic Distortion (THD)
- Failed State Impedance Test

APPENDIX 1 (300mm, 12-inch)

Minimum Maintained Luminous Intensity Values (With Margins) —VTCSH LED Vehicle Arrow Traffic Signal (Omni directional)

Vertical Angle (deg)	Horizontal Angle (deg)	Omni directional Angle (deg)	Luminous Intensity (candela) 300mm (12 in) Arrow Signal					
			Red		Yellow		Green	
			ITE	130%	ITE	125%	ITE	130%
27.5	7.5	28.4	2.8	3.6	6.9	8.6	3.6	4.7
	2.5	27.6	3.3	4.3	8.2	10.3	4.3	5.6
22.5	17.5	28.2	2.9	3.8	7.2	9.0	3.8	4.9
	12.5	25.6	5.0	6.5	12.4	15.5	6.4	8.3
	7.5	23.7	7.1	9.2	17.7	22.1	9.2	12.0
	2.5	22.6	8.5	11.1	21.2	26.5	11.1	14.4
17.5	22.5	28.2	2.9	3.8	7.2	9.0	3.8	4.9
	17.5	24.6	6.0	7.8	15.0	18.8	7.8	10.1
	12.5	21.4	10.5	13.7	26.1	32.6	13.6	17.7
	7.5	19	15.1	19.6	37.7	47.1	19.7	25.6
	2.5	17.7	18.2	23.7	45.3	56.6	23.7	30.8
12.5	22.5	25.6	5.0	6.5	12.4	15.5	6.4	8.3
	17.5	21.4	10.5	13.7	26.1	32.6	13.6	17.7
	12.5	17.6	18.3	23.8	45.7	57.1	23.9	31.1
	7.5	14.5	26.7	34.7	66.5	83.1	34.7	45.1
	2.5	12.7	32.1	41.7	80.1	100.1	41.8	54.3
7.5	27.5	28.4	2.8	3.6	6.9	8.6	3.6	4.7
	22.5	23.7	7.1	9.2	17.7	22.1	9.2	12.0
	17.5	19	15.1	19.6	37.7	47.1	19.7	25.6
	12.5	14.5	26.7	34.7	66.5	83.1	34.7	45.1
	7.5	10.6	38.9	50.6	97.0	121.3	50.6	65.8
	2.5	7.9	47.0	61.1	117.1	146.4	61.1	79.4
2.5	27.5	27.6	3.3	4.3	8.2	10.3	4.3	5.6
	22.5	22.6	8.5	11.1	21.2	26.5	11.1	14.4
	17.5	17.7	18.2	23.7	45.3	56.6	23.7	30.8
	12.5	12.7	32.1	41.7	80.1	100.1	41.8	54.3
	7.5	7.9	47.0	61.1	117.1	146.4	61.1	79.4
	2.5	3.5	56.8	73.8	141.6	177.0	73.9	96.1

Note 1: Luminous intensity values for equivalent up and down vertical angles are the same.

Note 2: Luminous intensity values for equivalent left and right horizontal angles are the same.

Note 3: Tabulated values of luminous intensity are rounded to the first decimal place

APPENDIX 2
Chromaticity

Red: $y = 0.308$;
$y = 0.953 – 0.947x$;
$y = 0.290$:

Point	Red x	Red y
1	0.692	0.308
2	0.681	0.308
3	0.700	0.290
4	0.710	0.290

Yellow*: $y = 0.151 + 0.556x$;
$y = 0.972 – 0.976x$;
$y = 0.235 + 0.300x$:

Point	Yellow x	Yellow y
1	0.545	0.454
2	0.536	0.449
3	0.578	0.408
4	0.588	0.411

*Yellow Measured at T_a = 25°C, preheat of 60 minutes (Cycling 5 sec ON, 35 sec Off)

Green: $y = 0.655 - 0.831x$
$x = 0.150$;
$y = 0.422 - 0.278x$:

Point	Green x	Green y
1	0.005	0.651
2	0.150	0.531
3	0.150	0.380
4	0.022	0.416

SECTION 5

LED PEDESTRIAN SIGNAL INDICATIONS

Purchase Specification for LED Pedestrian Countdown Modules 16in x 18in PED Countdown

2 PURPOSE

The purpose of this specification is to provide the minimum performance requirements for the LED "walking person" and "hand" icon pedestrian signal modules with countdown (hereafter called module or modules). This specification is only for the nominal overall message-bearing surface of 406 x 457 mm (16 x 18 in). This specification is not intended to impose restrictions upon specific designs and materials that conform to the purpose and the intent of this specification. This specification refers to definitions and practices described in "Pedestrian Traffic Control Signal Indications" published in the *Equipment and Materials Standards of the Institute of Transportation Engineers*, (referred to in this document as "PTCSI") and in the Applicable Sections of Manual on Uniform Traffic Control Devices (MUTCD) 2003 Section 4E. This purchasing specification applies to modules purchased after the effective date of these specifications.

3 PHYSICAL AND MECHANICAL REQUIREMENTS

3.1 General

Modules designed as retrofit replacements for existing pedestrian signal indication lamps shall not require special tools for installation. Retrofit replacement modules shall fit into existing pedestrian signal housings built for the PTCSI sizes stated in Section 1 of the "walking person" and "hand" icon pedestrian signal indication Standard without modification to the housing.

Installation of a retrofit replacement module into an existing pedestrian signal housing shall only require the removal of the existing optical unit components, i.e., lens, lamp module, gaskets, and reflector; shall be weather tight and fit securely in the housing; and shall connect directly to existing electrical wiring.

2.2 The Module under physical and mechanical requirements

2.2.1 The retrofit module shall be capable of replacing the optical component of the pedestrian indication.

2.2.2 The LED module shall have a visual appearance similar to that of an incandescent lamp (ie: Smooth and non-pixilated).

2.2.3 The module lens shall not be a replaceable part. Screwed on lenses are not allowed. Only modules with internal mask shall be utilized. No external silk-screen shall be permitted.

2.2.4 The dividers inside the module that make up the icons and digits shall be black so as to eliminate sun phantom effect. When not illuminated with the sun shining into the module, the WALKING PERSON and UPRAISED HAND and COUNTDOWN DIGITS shall not be readily visible.

2.2.5 The countdown digits of the pedestrian signal module shall be located adjacent to the associated UPRAISED HAND (symbolizing DON'T WALK). When displaying a number "1" for both digits, the number "1" shall use the two segments furthest to the right. The digits shall remain on during the entire count down cycle. Flashing digits are not allowed.

2.2.6 The display of the number of remaining seconds shall begin only at the beginning of the pedestrian change interval. After the countdown displays

zero, the display shall remain dark until the beginning of the next countdown.

2.2.7 The walking person, hand icons and countdown digits (16”x18” size only) shall be incandescent looking. The configurations of the walking person icon, hand icon and numbers icons are illustrated in Figures 1, 2 (per PTCSI Part 2 Specification) and Figure 3 respectively.

Figure 1

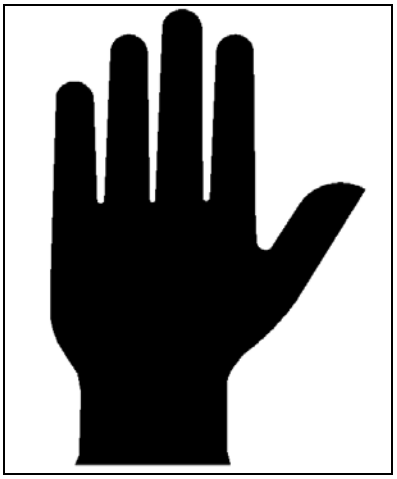

Figure 2

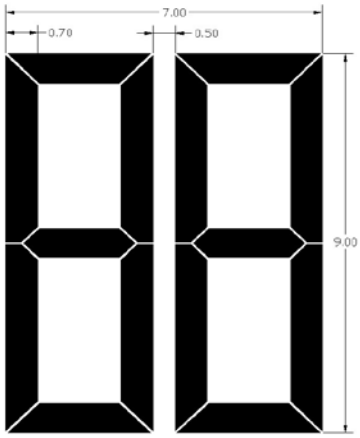

Figure 3

<u>Dimensions for Figures 1, 2 and 3</u>

For each nominal message bearing surface (module) size, use the corresponding minimum H (height) and W (width) measurements:

Module Size	Icon Height	Icon Width	Countdown Height	Countdown Width	Countdown Segment Width
406 x 457 mm (16 x 18 in)	297 mm 11 in	178 mm 7 in	229 mm 9 in	178 mm 7 in	17.78 mm 0.7 in

Note: The units shall not have any external attachments, dip switches, toggle switches or options that will allow the mode to be changed from counting the clearance cycle, to the full walk/don’t walk cycle or any other modification to the icons or digits.

2.3 Environmental Requirements

2.3.1. All exposed components of a module shall be suitable for prolonged exposure to the environment, without appreciable degradation that would interfere with function or appearance. As a minimum, selected materials shall be rated for service for a period of a minimum of 60 months in a south-facing Arizona Desert installation.

2.3.2. The module shall be rated for use in the ambient operating temperature range, measured at the exposed rear of the module, of -40°C to +74°C. (-40°F to +165°F)

2.3.3. A module shall be protected against dust and moisture intrusion, including rain and blowing rain. Shall be sealed and meet MIL-STD-810F Procedure I, Rain & Blowing Rain specifications.

2.3.4. The module lens shall not crack, craze or yellow due to solar UV irradiation typical for a south-facing Arizona Desert installation after a minimum of 60 months in service.

2.4 Construction

2.4.1. To prevent water seepage between the back cover and the electrical wires, or between the copper and insulation of the wires, the electrical wires shall not penetrate the LED module housing. Connection shall be made by use of an overmolded connector.

2.4.2. The module shall be a single, self-contained device, not requiring on-site assembly for installation into an existing pedestrian signal housing. The power supply shall be designed to fit and mount inside the pedestrian signal module.

2.4.3. The assembly and manufacturing process for the module shall be designed to assure all internal LED and electronic components are adequately supported to withstand mechanical shock and vibration from high winds and other sources.

2.5 Materials

2.5.1. Materials used for the lens and LED module construction shall conform to ASTM specifications where applicable.

2.5.2. Enclosures containing the power supply and electronic components of the LED module shall be made of UL94 flame retardant materials. The lens of the LED module is excluded from this requirement.

2.5.3. The front window shall be a transparent polycarbonate material with internal masking to prevent the icons and digits from being visible when not in operation. External masking or silk-screen technology shall not be permitted. When not illuminated, the Walking Person, Hand and Countdown Digits shall not be readily visible.

2.6 Module Identification

2.6.1 Each module shall be identified on the backside with the manufacturer's name, model, serial number and operating characteristics of each symbol. The operating characteristics identified shall include the nominal operating voltage and stabilized power consumption, in watts and Volt-Amperes.

2.6.2 Modules conforming to this specification (WALKING PERSON, UPRAISED HAND only), may have the following statement on an attached label: "Manufactured in Conformance with the ITE Pedestrian Traffic Control Signal Indications - Part 2: Light Emitting Diode (LED) Pedestrian Signal Modules".

4 PHOTOMETRIC REQUIREMENTS

3.1 Luminance, Uniformity & Distribution

3.1.1 For a minimum period of 60 months, the maintained minimum luminance values for the modules under the operating conditions defined in Sections 2.3.1 and 4.2.1, when measured normal to the plane of the icon surface, shall not be less than:

- Walking person: 2,200 cd/m^2;
- Hand: 1,400 cd/m^2.
- Countdown digits: 1,400 cd/m^2;

The luminance of the emitting surface, measured at angles from the normal of the surface, may decrease linearly to a value of 50% of the values listed above at an angle of 15 degrees.

The light output requirements in this specification apply to pedestrian signal heads without any visors, hooded or louvered (egg-crate).

3.1.2 The LED module shall have a visual appearance similar to that of an incandescent lamp (ie: Smooth and non-pixilated).

3.1.3 Maximum permissible luminance: When operated within the temperature range specified in Section 2.3.2, the actual luminance for a module shall not exceed three times the required peak value of the minimum maintained luminance.

3.1.4 Luminance uniformity: The uniformity of the signal output across the emitting section of the module lens (i.e. the hand, person or countdown icon) shall not exceed a ratio of 5 to 1 between the maximum and minimum luminance values (cd/m^2).

3.2 Chromaticity

3.2.1 The standard colors for the LED Pedestrian Signal Module shall be White for the walking person and Portland Orange for the hand icon and the countdown digits. The colors for these icons shall conform to the following color regions, based on the 1931 CIE chromaticity diagram:

Walking Person —White:

Blue boundary: $x = 0.280$.

1st Green boundary: $0.280 \leq x < 0.400$
$y = 0.7917 \cdot x + 0.0983$.

2nd Green boundary: $0.400 \leq x < 0.450$
$y = 0.4600 \cdot x + 0.2310$.

Yellow boundary: $x = 0.450$

1st Purple boundary: $0.450 \le x < 0.400$
$y = 0.4600 \cdot x + 0.1810.$

2nd Purple boundary: $0.400 \le x < 0.280$
$y = 0.7917 \cdot x + 0.0483.$

White		
Point	x	y
1	0.280	0.320
2	0.400	0.415
3	0.450	0.438
4	0.450	0.388
5	0.400	0.365
6	0.280	0.270

Hand and Countdown Digits—Portland Orange:

Yellow boundary: $y = 0.390$

White boundary: $0.600 \le x \le 0.659$
$y = 0.990 - x$

Red boundary: $y = 0.331.$

Portland Orange		
Point	X	Y
1	0.609	0.390
2	0.600	0.390
3	0.659	0.331
4	0.669	0.331

3.2.2 Color Uniformity:

Walking Person—White: $\sqrt{(\Delta x^2) + (\Delta y^2)} \le 0.04$

where Δx and Δy are the differences in the chromaticity coordinates of the measured colors to the coordinates of the average color, using the CIE 1931 Chromaticity Diagram and a 2 degree Standard Observer.

Hand and Countdown Digits—Portland Orange:
The dominant wavelength for any individual color measurement of a portion of the emitting surface of a module shall be within ±3nm of the dominant wavelength for the average color measurement of the emitting surface as a whole.

5 ELECTRICAL

4.1 General

All wiring and terminal blocks shall meet the requirements of Section 13.02 of the VTCSH Standard. Maximum of three secured, color coded, 1 meter (39 in) long 600 V, 16 AWG minimum, jacketed wires, conforming to the National Electrical Code, rated for service at +105°C, are to be provided for electrical connection. The conductors shall be color coded with orange for the hand, blue for the walking person and white as the common lead.

4.2 Voltage

4.2.1 LED modules shall operate from a 60 ± 3 Hertz ac line power over a voltage range from 80 to 135 VAC RMS.

4.2.2 Nominal operating voltage for all measurements shall be 120 ± 3 VAC RMS.

4.2.3 Fluctuations in line voltage over the range of 80 to 135 VAC RMS shall not affect luminous intensity by more than ± 10 %.

4.2.4 Catastrophic failure of one LED light source in Man & Hand icons shall not result in the loss of more than the light from that one LED.

4.2.5 To prevent the appearance of flicker, the module circuitry shall drive the LEDs at frequencies greater than 100 Hz when modulated, or at DC, over the voltage range specified in Section 4.2.1.

4.2.6 Low Voltage Turn Off: There should be no illumination of the module when the applied voltage is less than 35 VAC RMS. To test for this condition, each icon must first be fully illuminated at the nominal operating voltage. The applied voltage shall then be reduced to the point where there is no illumination. This point must be greater than 35 VAC RMS.

4.2.7 Turn-ON and Turn-OFF Time: A module shall reach 90% of full illumination (turn-ON) within 75 msec of the application of the nominal operating voltage. The signal shall cease emitting visible illumination (turn-OFF) within 75 msec of the removal of the nominal operating voltage.

4.2.8 Default Condition: For abnormal conditions when nominal voltage is applied to the unit across the two-phase wires (rather than being applied to the phase wire and the neutral wire) the pedestrian signal unit shall default to the hand symbol.

4.2.9 Icon Power Supplies: LED pedestrian countdown modules shall have two separate power supplies for powering the Walking Person and Upraised Hand icons. The circuitry shall be unrelated to power the LED Walking Person icon and the LED Upraised Hand icon, in order to virtually eliminate the risk of displaying the wrong icon

4.3 Transient Voltage Protection

The on-board circuitry of a module shall include voltage surge protection:

- To withstand high-repetition noise transients and low-repetition high-energy transients as specified in NEMA Standard TS-2 2003; Section 2.1.8
- Section 8.2 IEC 1000-4-5 & Section 6.1.2 ANSI/IEEE C62.41.2-2002, 3kV, 2 ohm
- Section 8.0 IEC 1000-4-12 & Section 6.1.1 ANSI/IEEE C62.41.2-2002, 6kV, 30 ohm

4.4 Electronic Noise

The LED signal and associated on-board circuitry shall meet the requirements of the Federal Communications Commission (FCC) Title 47, Subpart B, Section 15 regulations concerning the emission of electronic noise by Class A digital devices.

4.5 Power Factor (PF) and AC Harmonics

4.5.1 The modules shall provide a power factor of 0.90 or greater when operated at nominal operating voltage, and 25ºC (77ºF).

4.5.2 Total harmonic distortion induced into an AC power line by the module, operated at nominal operating voltage, and at 25ºC (77ºF) shall not exceed 20%.

4.6 Controller assembly Compatibility

4.6.1 The current draw shall be sufficient to ensure compatibility and proper triggering and operation of load current switches and conflict monitors in signal controller units.

4.6.2 Off State Voltage Decay: When the module is switched from the On state to the Off state the terminal voltage shall decay to a value less than 10 VAC RMS in less than 100 milliseconds when driven by a maximum allowed load switch leakage current of 10 milliamps peak (7.1 milliamps AC)

4.7 Constant Current Drive

The countdown digits shall be driven by constant current to improve LED efficiency and lifespan.

4.8 Power Consumption

Maximum power consumption requirements for the modules are as follows:

	25°C
"Hand"	11.0 Watts
“Walking Person”	8.0 Watts
"Count-Down Display"	6.0 Watts (when display shows “88”)

6 MODULE FUNCTIONS

5.1 Cycle

The module shall operate in one mode: *Clearance Cycle Countdown Mode Only.* The module shall start counting when the flashing don’t walk turns on and will countdown to “0” and turn off when the steady “Don’t Walk” signal turns on. The m*odule shall not have user accessible switches or controls for the purpose of modifying the cycle, icons or digits.*

5.2 Learning Cycle

At power on, the module enters a single automatic learning cycle. During the automatic learning cycle, the countdown display shall remain dark.

5.3 Cycle Modification

The unit shall re-program itself if it detects any increase or decrease of Pedestrian Timing. The digits shall go blank once a change is detected and then take one complete pedestrian cycle (with no counter during this cycle) to adjust its buffer timer.

5.4 Recycling

The module shall allow for consecutive cycles without displaying the steady Hand icon ("Don't Walk").

5.5 Pre-Emption

The module shall recognize preemption events and temporarily modify the crossing cycle accordingly.

- **If the controller preempts during the walking man, the countdown shall follow the controller's directions and shall adjust from walking man to flashing hand. It shall start to count down during the flashing hand.**
- If the controller preempts during the flashing hand, the countdown shall continue to count down without interruption.

The next cycle, following the preemption event, shall use the correct, initially programmed values. This specification is worded such that the flashing don't walk time is not modified.

5.6 "Don't Walk" Steady

If the controller output displays Don't Walk steady condition or if both the hand /person go dark and the unit has not arrived to zero, the unit suspends any timing and the digits shall go dark.

5.7 Power Outage

The digits will go dark for one pedestrian cycle after loss of power of more than 2.0 seconds.

5.8 Digit Operation

The digits shall remain continuously lit during the clearance cycle and shall not flash in conjunction with the Hand/Don't Walk icon.

7 QUALITY ASSURANCE

7.1 General

Unless otherwise specified all of the test will be conducted at an ambient temperature of 25°C and at the nominal operating voltage of 120 VAC RMS.

7.1.1 The modules shall be manufactured in accordance with a vendor quality assurance (QA) program.

7.1.2 QA process and test result documentation shall be kept on file for a minimum period of seven years

7.2 Conformance

The module designs not satisfying design qualification testing and the production quality assurance testing performance requirements shall not be labeled, advertised, or sold as conforming to this specification.

7.3 Production Tests & Inspections

All lamps manufactured shall be affixed with an Intertek ETL Verified label (or other 3rd Party "Nationally Recognized Testing Laboratory/NRTL") to demonstrate compliance to Section 6.3 (Production Tests & Inspections) of the latest ITE PTCSI Pedestrian specification, dated March 19, 2004.

6.3.1 Production Test Requirement: All new LED modules tendered for sale shall undergo the following Production Test and Inspection prior to shipment. Failure of a module to meet requirements of these Production Test and Inspection shall be cause for rejection. Test results shall be maintained for a period of 5 years following the production of the last production unit.

6.3.2 Luminous Intensity: All LED modules shall be tested for maintained minimum luminous intensity. A single point measurement with a correlation to the intensity requirements referred to in Section 3.0 may be used. The LED module shall be operated at nominal operating voltage and at an ambient temperature of 25°C (77°F).

6.3.3 Power Factor: All LED modules shall be tested for power factor per the requirements of Section 4.6.1. A commercially available power factor meter may be used to perform this measurement.

6.3.4 Current: All LED modules shall be measured for current flow in Amperes. The measured current values shall be compared against those resulting from design qualification measurements in Section 5.4.6.1. Measured current values in excess of 120% of the design qualification current values shall be cause for rejection.

6.3.5 Visual Inspection: All LED modules shall be visually inspected for any exterior physical damage or assembly anomalies.

7.4 Design Qualification Testing

7.4.1 Design Qualification testing shall be performed on new module designs, and when a major design change has been implemented on an existing design.

7.4.2 High Temperature High Humidity (HTHH): 1000 hours at +60°C (+140°F), 90% Relative Humidity with cycling starting at 30 down to 0. This will ensure that each symbol is properly tested.

7.4.3 Unless otherwise specified, all of the tests shall be conducted on the same set of randomly selected modules, hereafter called the sample set, at an ambient temperature of 25°C and at the nominal operating voltage of 120 VAC RMS.

7.4.4 Testing shall be performed once every 5 years or when the module design or LED technology has been changed. The module manufacturer shall retain test data for a minimum period of 7 years and for a period of at least 5 years beyond the last date of manufacture of that model type.

7.4.5 Conditioning: The module shall be energized for a minimum of 24 hours in an ambient temperature of +60°C (+140°F), 0% Relative Humidity with cycling starting at 99 down to 0. This will ensure that each symbol is properly conditioned.

7.4.6 Mechanical Vibration: Mechanical vibration testing shall be performed per MIL-STD-883, Test Method 2007.

7.4.7 Temperature Cycling: Temperature cycling shall be performed per MIL-STD-883, Test method 1010. The temperature range shall include the full ambient operating temperature range specified in Section 2.3.2.

7.4.8 Moisture Resistance: Moisture resistance testing shall be performed per MIL-STD-810F, Test Method 506.4, Procedure I, Rain and Blowing Rain. The test shall be conducted on stand-alone modules, without a protective housing. The modules shall be vertically oriented, such that the lens is directed towards the wind source when at a zero rotation angle. The modules shall be energized throughout the test. The water shall be at 25° ± 5°C (77° ± 9°F). The wind velocity shall be 80 km/hr (50 mph).

8 WARRANTY

Manufacturers will provide the following warranty provisions. Replacement or repair of an LED signal module that fails to function as intended due to workmanship or material defects within the first 5 years (60 months) from the date of delivery.

Section 6

CLOSED CIRCUIT TELEVISION (CCTV)

Purpose: This purpose of this section is to identify and describe a Pan Tilt Zoom Dome CCTV camera that has HD quality video and is truly an IP addressable piece of equipment without the use of media converters or other external devices.

A. PTZ I.P. addressable dome camera physical requirements

Follow these minimum requirements for a dome-enclosed camera system assembly including the camera, lens, pan/tilt drive, and control electronics.

- Provide a downward-looking circular dome-shaped enclosure assembly. The enclosure shall have an external aluminum casing that is IP66 compliant and NEMA 4x rated.
- The camera shall be provided with (2) lens shields one being clear dome (PMMA) type and the second being smoke in color and (PC/ASA) in rating.
- The weight of the camera shall not exceed 2.0kg (4.4lb.)
- Operating Conditions = -20 C to 50 C (-4 F to 122 F) Humidity 10 – 100% RH (condensing)
- Connectors = RJ-45 for 10BASE-T/100BASE-TX PoE IP66-rated RJ-45 connector kit included
- Mounts = The camera assembly must be able to accept a 1 & ½" threaded aluminum pendant mount that will allow the camera to attach to a section of 1 & ½" threaded pipe.

B. PTZ I.P. addressable dome camera features

The following are a set of minimum requirements regarding camera features that must be met in order to supply a CCTV PTZ Dome Camera.

- **Memory** = 256 MB Ram, 128 MB Flash
- **Edge Storage** = SD/SDHC/SDXC slot supporting memory card up to 64 GB (card not included) Support for recording to network share (network-attached storage or file server).
- **Network Security** = Password protection, IP address filtering, HTTPS encryption, IEEE 802.1X network access control, digest authentication user access log.
- **Supported Protocols** = IPv4/v6, HTTP,HTTPS,SSL/TLS, QoS Layer 3 DiffServ,FTP,CIFS/SMB,SMTP,Bonjour,UPnP,SNMPv1/v2c/v3 (MIB-II),DNS,DynDNS,NTP,RTSP,RTP,TCP,UDP,IGMP,RTCP,ICMP,DHCP,ARP,SOCKS
- **Video Streaming** = Multiple, individually configurable streams in H.264 and Motion JPEG. Controllable frame rate and bandwidth VBR/CBR H.264
- **Frame Rate** = H.264: up to 30/25 fps (60/50Hz) in all resolutions Motion JPEG: up to 30/25fps (60/50Hz) in all resolutions.
- **Resolutions** = HDTV 720p 1280x720 to 320x180
- **Video Compression** = H.264 (MPEG-4 Part 10/AVC) Motion JPEG
- **Image Settings** = Wide dynamic range (WDR), manual shutter time, compression, color, brightness, sharpness, white balance, exposure control, exposure zones, backlight compensation, fine tuning of behavior at low light, rotation, text and image overlay, 3D privacy mask, image freeze on PTZ.
- **Pan/Tilt/Zoom functionalities** = limited guard tour, control queue, on-screen directional indicator.
- **Pan/ Tilt/Zoom general** = E-flip, Auto-flip, 100 preset positions, Pan: 360 degrees (with Auto-flip), 0.2 – 300degrees /s Tilt: 180 degrees, 0.2 – 300degrees, 18x optical zoom and 12xdigital zoom, total 216x zoom.
- **Shutter Time** = 1/10000s to 1/4s
- **Minimum Illumination** = Color: 0.74 lux at 30 IRE F1.6, B/W: 0.04 lux at 30 IREF1.6
- **Lens** = f = 4.7 – 84.6mm, F1.6 – 2.8, autofocus, automatic day/night Horizontal angle of view: 55.2degrees -3.2 degrees.
- **Image Sensor** = 1/3" progressive scan CCD 1.3 megapixel

- **Application Programming Interface** = Open API for software integration, including VAPIX and AXIS Camera Application Platform.ONVIF, specification available at www.www.onvif.org
- **Intelligent Video** = Video motion detection, Advanced Gatekeeper functionality
- **Event Triggers** = Video motion detection, PTZ preset, temperature, memory card full
- **Event Actions** = File upload: FTP, Http, network share and email. Notification : email, HTTP and TCP PTZ preset, video recording to edge storage Pre- and Post-alarm video buffering.
- **Data Streaming** = Event data
- **Installation aid** = Pixel counter

C. PTZ I.P. addressable dome camera accessories.

The following are a set of minimum requirements regarding camera accessories that must be met in order to supply a CCTV PTZ Dome Camera.

- Power = Power over Ethernet Plus (PoE +) IEEE 802.3at, max. 30 W T8123 High PoE Midspan 1-port included: 100-240 VAC max. 37W
- T8123 High PoE Midspan 1-port, IP66-rated RJ-45 connector kit, smoked dome cover, installation guide, installation and management software cd, windows decoder 1- user license.

Section 7

OVERHEAD LED SIGNAGE

Internally Illuminated Edge Lit L.E.D. Street Name Signs

1. **Description**

The sign body shall be lightweight for easy installation and made of aluminum. and all hardware shall be stainless steel.

2. **Dimensions of Signs**

The standard sign assembly height is 22" (including frame, illuminated height is 19") with a sign thickness of 2 ½"standard. widths of:

- 48 inches (4 foot)
- 72 inches (6 foot)
- 96 inches (8 foot)

Are standard sizes. Special sizes are available upon request.

3. **Sign Weight.**

The maximum weight of the sign (without mounting hardware) should not exceed 70 lbs for the 96-inch, 40 lbs for the 72-inch, and 15 lbs for the 48-inch signs.

4. **Sign Construction**

Holes shall be positioned on the bottom of the sign to allow for the draining of any water condensation in the enclosure.

The finish of the aluminum sign assembly shall be powder coated. A quality assurance program meeting MIL-STD-883 at the factory of the manufacturer is preferred. The sign assembly, including the sign panel and mounting assemblies shall be designed, tested, and constructed to that no permanent deformation, warping, or failure will occur when subjected to 110 mph wind loads.

5. **Sign Facing**

The sign face shall be made of strong polycarbonate material with UV and abrasion resistance. The end user shall approve sheeting, including material and grades, before cutting. Lettering, including font and spelling, shall be reviewed and approved before making the signs. All letter and spacing shall be 100% of the M.U.T.C.D. minimum recommendation. Letters/legends requiring lengths in excess of the maximum size of the sign face shall be adjusted, condensing the letters/legend to make it fit.

6. **Sign Brightness and Function**

The entire surface of the sign panel shall be evenly illuminated with a minimum average brightness reading at the letters of 1615 lm per square meter (150 lm per square foot).

7. **Manufacturer Qualifications and Warranty**

The manufacturer shall have at least six (6) years of experience of making LED traffic control related products, and shall be ISO 9001-2000 International Quality System certified. The life expectancy of the LED sign shall be a minimum of 100,000 hours with a 50% duty cycle. The manufacturer shall provide a minimum of three (3) years warranty on the LED sign.

8. **LED Equipment**

The sign shall be equipped with solid-state high power white LED light strips utilizing sate-of-the-art hi-flux LED's with an efficient heat-dissipating feature. LED light engine maximum power values shall not exceed 100W for a 6-ft sign that is illuminated on both sides and 135W for an 8-ft sign illuminated on both sides. The LED light strip modules shall have a power supply regulating the voltage and current to preserve the life of the LED's. The sign shall operate on 120VAC (nominal). The sign shall be able to operate over the temperature range of -40oC to +74oC.

9. **Maintenance of Equipment / Replacement of LED Modules**

A. The sign shall be designed in a way that replacement of LED modules and sign face can be performed in the field without taking the whole sign back to the shop. The sides of the sign assembly facing traffic shall have removable faces mounted in an aluminum U-channel cover that is tightened at the bottom. The frame for these sides shall be of one-piece construction.

B. Each sign shall have a removable LED light strip located on the top and bottom of each sign. The strips shall be in two foot incriments that connect to the sign using metal contacts located on each end of the light strip. (no wiring harnesses on light modules).

10. **Mounting of Signage**

Brackets for mounting to mast arms shall be included with each sign.
A photo cell shall be provided as an integral part of the sign, if requested by Douglas County, for each sign for on and off electrical switching control of the sign.

EXAMPLE: DURALIGHT JXM-STN SERIES SIGNAGE

SECTION 8

LED OUTDOOR LUMINAIRE FIXTURES

1.0 PURPOSE

The purpose of this specification is to provide the minimum performance requirements for the LED Outdoor Luminaire Fixture. This specification refers to definitions and practices described in "Roadway Lighting" published in the American National Standard Practice for Roadway Lighting (ANSI / IESNA RP-8-00)

2.0 PHYSICAL AND MECHANICAL REQUIREMENT

2.1 General

2.1.1 Usage: Fixtures shall fit into existing Luminaire mast-arms with a diameter range from 1-3/4” to 2-3/8”.

2.1.2 Installation requirements: Installation of an LED fixture into existing mast arm shall allow fixture uptilt of 0°, 2.5°, 5° and 7.5°.

2.1.3 Internal terminal block shall accept #10AWG or smaller.

2.1.4 Installation shall not require special tools.

2.1.5 The module shall provide Type 3 radiation pattern and must meet minimum roadway surface illuminance requirements as per IESNA/ANSI RP8-10, American National Standard.

2.2 Physical Dimension

2.2.1 Nominal Fixture size: 15”X24.5”X4.5”

3.0 LED Outdoor Luminaire Fixture

3.1 The LED fixture shall provide a complete replacement of the light fixture.

3.2 The fixture lens shall be hard coated complying with (SAE) J576.

3.3 The fixture lens may be a replaceable part, without the need to replace the complete fixture.

1

3.4 The fixture power supply shall be a replaceable part, without the need to replace the complete fixture.

3.5 The fixture power supply shall be Class 2 UL approved.

3.6 The fixture shall be CSA/UL Listed for wet locations.

3.7 The fixture shall provide receptacle to connect to all standard photocell controller/timer.

4.0 Environmental Requirements

4.1 The LED fixture shall be rated for use in the ambient operating temperature range of -40°C to 50°C.

4.2 The LED fixture shall be protected against dust and moisture intrusion as per NEMA standard 250-1991 type 4. IP67

4.3 The lens surface shall be smooth on the outside to reduce dust and dirt collection.

4.4 The LED fixture shall be rated to withstand mechanical vibration per MIL-STD 883, test method 2007, using three 4-minute cycles along x, y and z axis, at a force of 2.5 Gs, with a frequency sweep from 2 Hz to 120 Hz.

5.0 Construction

5.1 The light fixture shall be a single, self-contained device, not requiring on-site assembly for installation into existing roadway mounting.

5.2 The assembly and manufacturing process for the light fixture shall be designed to assure all internal LED and electronic components are adequately supported to withstand mechanical shock and vibration from high winds and other sources.

5.3 The lens shall be clear polycarbonate UV stabilized, .100” thick, injection-molded and shall be free of interstitial bubbles and foreign matter.

5.4 The lens gasket shall be one piece, continuous molded silicone, held in place with a standing rib formed into the housing casting.

5.5 The lens shall be sealed against the housing with a minimum of twelve stainless steel fasteners.

5.6 The power-supply compartment shall hinge open and be secured with two stainless steel captive fasteners.

6.0 Materials

6.1 Materials used for the lens and LED module construction shall conform to ASTM specifications where applicable.

6.2 Enclosures containing the power supply and electronic components of the LED module shall be made of UL94VO flame retardant material.

6.3 Exterior finish shall be Epoxy Polyester, applied electrostatically in a powder form, baked per paint manufacturer specification. It shall pass 1000 hr salt spray, 1/8” cross-hatch adhesion, and impact tests per ASTM.

7.0 Module Identification

7.1 Each LED light fixture shall be identified on the backside with the manufacturer’s name and serial number.

7.2 The following operating characteristics shall be identified: nominal operating voltage, power consumption and Volt-Ampere.

8.0 Photometric Requirements

8.1 Photometric measurement shall be documented by an independent test lab report as tested by IESNA specification LM 79 and LM80

8.2 All certified independent test lab report shall include IES format file for use with lighting software.

2

8.3 Chromaticity

The standard color for the LED light output shall be white. The color temperature shall be typical 5500K +/- 500K, CRI of 72+

9.0 SOLID STATE LIGHT SOURCE COMPONENTS

9.1 High Power LED shall be manufactured by Nichia and shall conform to ANSI standard for High Power LED's. Nichia #NS6W083B. 100 lumens per watt minimum.

9.2 Thermal Management shall be achieved by the intimate contact of the PC board with the interior of the luminaire housing, which incorporates heat extraction fins with a surface area of 732 square inches.

9.3 Junction Temperatures shall operate at or below manufacturer specification while the luminaire operates in a 60°C ambient, or below.

10.0 ELECTRICAL

10.1 Voltage Range

10.2 LED light fixture shall operate from a 47-63 Hertz ac line power over a voltage range from 90 Vac RMS to 264 Vac RMS.

10.3 Nominal operating voltage for all measurements shall be 220+/- 3 Vac rms.

10.4 Fluctuation in the line over the voltage range shall not affect luminous intensity by more than +/- 10%.

10.5 Transient Voltage Protection

10.5.1 The LED fixture and the on-board circuitry shall include voltage surge protection to withstand high-repetition noise transients and low-repetition, high-energy transients as stated in section 2.1.6, NEMA Standard TS-2, 1992.

10.6 EMC Noise

10.6.1 The LED fixture and the on-board circuitry must meet Federal Communications Commission (FCC) Title 47, subpart B, section 15 regulations concerning the emission of electronic noise.

10.7 Power Factor (PF) and AC Harmonics

10.7.1 LED light fixture shall provide a power factor of .9 or greater.

10.7.2 Total Harmonic distortion shall be less than 20%.

10.8 Testing

10.8.1 Each luminaire shall be tested electrically under specified input voltages.

10.8.2 Each power supply shall be “Hi-Pot” tested at 8,000 volts for 0.1 seconds

10.9 Power Consumption

10.9.1

10.9.2 Typical power consumption for each model shall be as follows;

3

Part number Description	Power Consumption (W)	HPS Replacement	Lumen Output
SLN – 34_ _ _ _ – FX	51	75W	3400
SLN – 51_ _ _ _ – FX	73	100W	5100
SLN – 68 _ _ _ _ – FX	99	125W	6800
SLN – 85_ _ _ _ – FX	123	150W	8500
SLN – 102_ _ _ _ – FX	152	250W	10,200
SLN –156_ _ _ _ – FX	166	400W	15,600

Model Number	Lumens	Input Voltage	Color temperature	Light Distribution	Housing
EX: SLN	156	W	CW	M3	FX
MV: 110/220 27: 277 34: 347 48: 480 LV: 12/24			CW: Cool White 5500K NW: Neutral (4000K) WW: Warm White (3000)	S: Short M: Medium 2, 3, Type	

Section 9

Meterbases

1.0 Purpose : The purpose of this section is to describe a 200 amp metebase assembly that is a required piece of equipment on any electronic traffic control device installed inside of Douglas County. This equipment may be obtained locally from **Greystone Power** and is stocked at their facility. This equipment is a requirement specifically for projects that receive power service drops from Greystone Power.

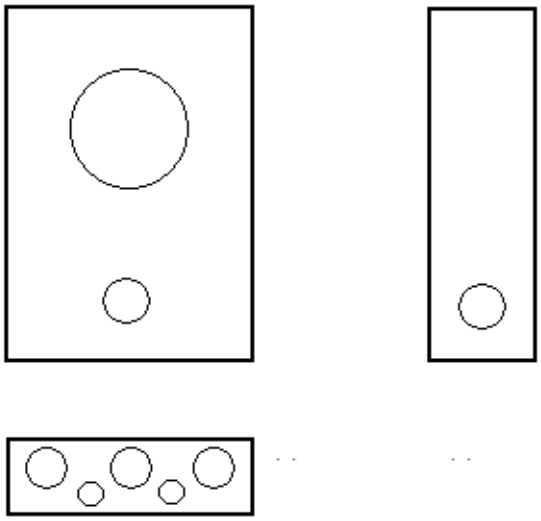

U9801-RXL
Specifications

KSCdirect Part Number: U9801-RXL
Manufacturer Part Number: U9801-RXL
Manufacturer: Milbank
Type:RINGLESS
Service Type:OVERHEAD/UNDERGROUND
Circuit Configuration:1 PHASE 3 WIRE
Voltage Rating:600 VAC
Current Rating:200 AMPERE
Bypass Switch Type:LEVER
Number of Jaws:4
Hub Type:LARGE OPENING WITH SMALL CLOSING PLATE
Knockouts:(1) 1/4 INCH, (1) (1/4-INCH-1/2 INCH)
CONCENTRIC KNOCKOUT, (1) 2 1/2 INCH, (4) 3 INCH
Neutral Type:BONDED/TRIPLEX NEUTRAL
Wire Size:6 AWG TO 350 KCMIL (ALUMINUM/COPPER) LINE/LOAD
Size:13 INCH W X 4-7/8 INCH D X 19 INCH H
Approval:UL
Manufacturer Short Name: MILB
Manufacturer UCC#: 784572
Item Weight: 22 lb.
Classification: Single Position Meter Socket
Short Description: 200A 4MTR SKT

The following design sheet shows the cutsheet for the product required. ALL wiring for meterbase equipment needs to include a 6awg stranded copper wire with a BLACK jacket and a 6awg stranded copper wire with a WHITE jacket for all neutral wires. The assembly must be grounded to earth ground.

9801-41

CAT. NO.	TOP ITEM #1	SHELL WELDMENT #
S,U,AP or UAP 9801-0	#1001098 (SC) #1000674-AC	#1124912 (SC) #1004047-AC
S,U,AP or UAP 9801-[1]	#1001611 (SC) #1023729 (AC)	#1124913 (SC) #1021379 (AC)
S,U,AP or UAP 9801-[2]	#1023723 (SC) #1023721 (AC)	#1124014 (SC) #1024201 (AC)

CAT. NO. PREFIX

R = 16 GA. STEEL PAINTED SHELL U/L LABELING, SINGLE PACK (RETAIL)
S = 18 GA. STEEL PAINTED SHELL NON-U/L LABELING
U = 18 GA. STEEL PAINTED SHELL U/L LABELING
AP = .064 ALUM. PAINTED SHELL NON-U/L LABELING
UAP = .064 ALUM. PAINTED SHELL U/L LABELING

CAT. NO. SUFFIX

SUFFIX	[1] SMALL HUB OPENING HUBS	ITEM #10
-0	BLANK TOP	# NONE
-WL	1"	# HUB W
-TL	1 1/4"	# HUB T
-3L	1 1/2"	# HUB 3
-DL	2"	# HUB D
-EL	2 1/2"	# HUB E
-XL	CLOSING PLATE	#1028222
-RL	HUB OPENING	# NONE

SUFFIX	[2] LARGE HUB OPENING HUBS	ITEM #10
-F	3"	# HUB F
-G	3 1/2"	# HUB G
-H	4"	# HUB H
-X	CLOSING PLATE	#1001188
-R	HUB OPENING	# NONE
-RRL	ADAPTER PLUGS W/ BLANK FRONT W/ 1" HUB	# HUB R
-RDL	ADAPTER PLUGS W/ 1" HUB	# HUB J
-REL	ADAPTER PLUGS W/ 2 1/2" HUB	# HUB K
-RXL	ADAPTER PLUGS W/ BLANK FRONT W/ CLOSING PLG.	# HUB I

SUFFIX	FRONT ASSY. ITEM #8
NONE	#1001181 (SC) #1023217 (AC)
-PL	#1003207-SC
THE FOLLOWING FRONTS ARE ON DRWG. #9080-0	
-BPLB	#1121408 (SC) #1027578 (AC)

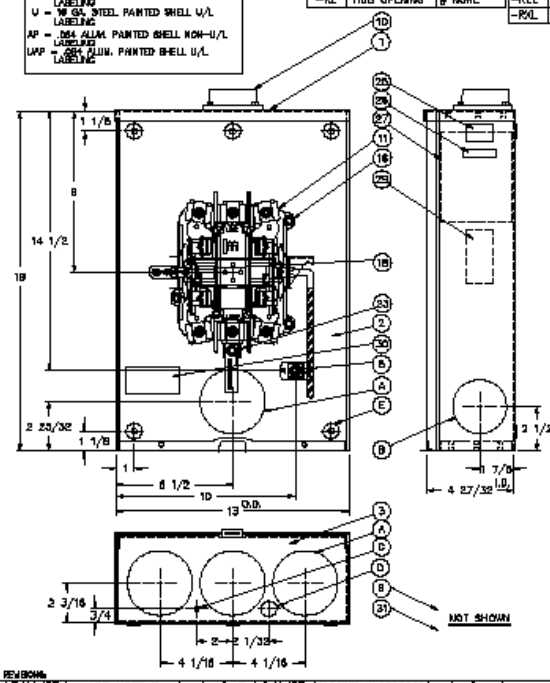

NOTES:
1.) FOR LABELING LOC. SEE DWG. #1098866.
2.) LEVER SUPPLIES CLAMPING ACTION ON METER SPADES AND ALSO OPERATES BYPASS DEVICE.
3.) WHEN CAT. NO. HAS SUFFIX -GS: WHEN SOLD AS STEEL: INSTALL BONDING LINK ASSY #1134605 INSTEAD OF #1134603. WHEN SOLD AS ALUM: INSTALL BONDING LINK ASSY #1029908 INSTEAD OF #1001182.
4.) FOR FIELD INSTALLED FIFTH TERM ASSY ORDER CAT. #K3801.
5.) WHEN CAT NO. HAS SUFFIX -CH STAMP THE LETTERS "CH-058" ON THE SIDE BELOW CAT. NO.
6.) WHEN SOLD AS ALUM. 1132146 BECOMES 1001183, 1000183 BECOMES 1000666 AND 1124906 BECOMES 1001182.
7.) WHEN SOLD W/ "R" PREFIX, UNIT TO BE SINGLE PACKED IN CARTON #1001276. APPLY CARTON LABEL FROM LIST BELOW TO MIDDLE OF CARTON SIDE PANEL (STANDARD/LOWER):
RS801-RXL= #1131455/#1131540
RAP9801-RXL= #1130119/#1130117
8.) WHEN SOLD AS US801-RXL-DTE ADD LABEL #1135432 (LOC. "B").

CARDBOARD CLOSING PLATE #1000788 1-PER
CARTON #1001276 1-PER

BILL OF MATERIAL

NO.	QTY.	DESCRIPTION
A	4	1 1/4, 1 1/2, 2, 2 1/2, 3 CONC KO
B	2	1, 1 1/4, 1 1/2, 2, 2 1/2 CONC. K.O.
C	1	1/4 SOLID K.O
D	1	1/4, 1/2 CONC. K.O.
E	9	U/L MOUNTING ENBOSS
1	1	TOP (SEE CHART)
2	1	BACK #1001103/#1023817
3	1	BOTTOM #1001108/#1028875
5	1	WELD-IN GRND. ASSY. #1001180/#1028171
8	1	FRONT ASSY. (SEE CHART)
10	1	UNIT HUB AS SPECIFIED (SEE CHART) [1] [2]
11	1	BLOCK ASSY. #1028938
16	3	BLOCK TO BACK SCW. #1123646 (SEE NOTE)
18	1	BACK SCW #1000183 (SEE NOTE)
23	1	BONDING LINK ASSY #1134605 (SEE NOTES #3 & #6)
25	1	WHEN SOLD AS U/L SUPPLY LABEL #1000166 LOC."A" (SEE NOTE)
26	1	STAMP CAT. NO.
27	1	FOR NON U/L LABEL USE #1134671 FOR U/L LABEL USE #1001286 LOC."B" (SEE NOTE)
28	1	LABEL BYPASS #1001272 LOC."B" (SEE NOTE)
30	1	WHEN SOLD AS U/L WITH BLANK OR "-0" TOP SUPPLY LABEL #1000044 (LOC. AS SHOWN)
31	1	LABEL #1000004 LOC.(OUTSIDE UPPER LEFT CORNER OF FRONT.)

MATERIAL:	18 GA. STL. OR .064 ALUM
FINISH:	MILBANK LIGHT GRAY
CATALOG NO:	(SEE CHART) H.D.
TITLE:	200A BYPASS RINGLESS 4-TERM 350 kcmil W/S
CUSTOMER:	MILBANK STANDARD
DRAWING NO:	9801-41

MILBANK MFG. CO.
KANSAS CITY, MO. KOKOMO, IN.
DRAWN JM DATE
CHECKED LAL
APPROVED DATE 8-13-91

REV	DATE	CHANGE																							
01	7/14/08	ADD NOTE 7 (ECO #17437)	D.F.	S	E	9/4/08	1134871 W 1000045 DELETE 1000044																		
02	9/2/08	UPDATE NOTE 7 (ECO #17530)	D.F.	S			(ECO #17555) ADD NOTE 8																		

GROUP 4

LOOP SEALANT
PROPOSED SPECIFICATION
High Performance Detector Loop Sealant

I. Scope

The sealant is intended to provide environmental protection to the wires of a detector loop traffic detection system. The material shall provide compressive yield strength to withstand normal vehicular traffic as well as sufficient flexibility to withstand normal movement in asphalt and concrete road pavements, while protecting the loop wire from moisture, penetration, fracture, and shear forces.

II. General

A. The sealant shall be a one-part elastomeric compound requiring no mixing, measuring or application of heat prior to or during its installation.

B. The sealant shall, within its stated shelf life and original undamaged packaging, cure only in the presence of moisture. The rate of cure will depend on temperature and relative humidity at the time of installation (cool, dry weather will slow curing while warm, humid weather will accelerate it).

C. The sealant shall have flow characteristics, which insure complete encapsulation of the wires.

D. The sealant shall not run out of the detector saw-cut in sloped roadbed areas during or after application.

E. The uncured sealant shall be designed to permit cleanup with a cleaner that will not threaten harm to workers or the environment.

F. The sealant shall be designed to enable vehicular traffic to pass over the properly filled 1/4 inch to 3/8 inch (63.5mm 95.3mm) wide saw-cut immediately after installation without danger of the sealant pulling out of the saw-cut during cure.

G. The sealant shall exhibit minimal shrinkage during cure so as not to require any additional material after cure.

H. The sealant shall be designed for roadway installation when surface temperature is 40°F to 100°F (4°C to 38°C).

I. The sealant shall be classified “not regulated for surface transportation” according to U.S. DOT regulation.

J. The cured sealant shall be landfill disposable.

III. Physical Requirements

A. The sealant shall have physical properties, which enable the product to meet the General Description (See Table 1) requirements.

B. The sealant shall not contain solvents incompatible with asphalt (Toluene, Mineral Spirits, other similar hydrocarbons).

IV. Environmental Aspects

A. Properly installed and cured sealant shall exhibit resistance to effects of weather, vehicular abrasion, motor oils, gasoline, antifreeze solution, brake fluid, deicing chemicals and salt normally encountered in such a manner that the performance of the vehicle detector loop wire is not adversely effected.

B. The cured sealant shall be temperature stable and exhibit no degradation in performance throughout the ambient temperature ranges experienced within the continental United States, Alaska, Hawaii and Puerto Rico.

V. Dispensing

A. The sealant shall be available in metric sized, pliable packaging for dispensing from a commercially available 66 cm air assisted applicator gun and generate less than 65 cc of solid waste per liter of sealant.

B. The sealant shall be dispensable from bulk containers (five gallon pails or 55 gallon drums) with a commercially available pumping system.

VI. Life/Reliability

A. The sealant shall have the following shelf life in undamaged containers when stored below 80°F (27°C).

1. Liter ply packs: Nine months after receipt.

2. Five-gallon pails (containing 4.5 U.S. gallons): Twelve months after receipt.

3. Gallon drums (containing 50 U.S. gallons): Twelve months after receipt.

TABLE I

Physical Properties of the Uncured (wet) Sealant:

Property	Requirement	Test Procedure	ASTM Reference
A. Density	10.0 - 10.6 lb./gal 1.20-1.27g/cc	A. Weight/Gallon	D-1875
B. Total Solids by Weight	75% minimum	B. Determination of non-volatile content	D-2834
C. Viscosity	5,000-85,000 cps	C. Viscosity	D-1048B
D. Drying Time	Touch: 24 hr. max.	D. Tack-Free Time	D-1640
E. Non-Flow	70% min.	E. Retention Test [1]	---

Physical Properties of the Cured Encapsulant

Property	Requirement	Test Procedure	ASTM Reference
A. Hardness (Indentation)	60-85	A. Rex Hardness	D-2240[3]
B. Tensile Strength	800 psi min .0.563Kg/mm^2	B. Tensile and Elongation	D-412A[2]
C. Elongation at break	400-700%	C. Tensile and Elongation	D-412A[2]

1. See attached testing procedure.
2. Jaw speed: Ten-inch(25.4cm)/minute
3. Maintain measuring pressure for ten seconds and record initial and final value. Final value shall be within five units of the original value.

Retention Test for Detector Loop Sealant

I. TITLE: Percent by Weight Retention Test

II. SCOPE: To measure the non-flow properties of a one-component sealant.

III. EQUIPMENT AND MATERIALS:

1. Balance

2. Tongue depressor
3. Two ounce ointment cans or equivalent
4. One inch (2.54cm) wide masking tape
5. Percent retention test fixture (this is an aluminum fixture--see attached figure)
6. B-D 10 cc. syringe
7. Sample of sealant to be tested

IV. PROCEDURE:

1. Put a strip of masking tape on both ends of the test fixture completely covering the slot.

2. Weigh the fixture with masking tape (a).

3. Sample of sealant should be tested at 75-79°F (24-26°C) and stirred for one minute prior to testing.

4. Fill the syringe with the sample and inject the sample into the slot in the test fixture.

5. Using a tongue depressor, scrape off any excess sealant from the top of the test fixture so that the sealant fills the test fixture slot and is level with the top of the fixture.

6. Re-weigh the fixture with the sample material filling the slot (b).

7. Put the fixture on top of the two-ounce ointment cans and remove the masking tape from the sides.

8. Wipe off and discard any sealant on the pieces of masking tape. Do not discard the pieces of masking tape.

9. The test period is for five minutes, starting when the two strips of masking tape are removed from the ends of the test fixture. During the test period the sealant may flow out of the slot onto and down the sides of the test fixture.

10. After the five minute test period, using a tongue depressor, wipe off and discard any sealant that has run out of the slot onto the sides of the test fixture, so that the only remaining sealant is in the slot of the fixture.

11. Replace the same pieces of masking tape that were removed at the beginning of the test, back onto the fixture.

12. Re-weigh the test fixture with the residual amount of sealant (c).

$$\frac{\text{Final weight of sample}}{\text{Original weight of sample}} \times 100 = \%\ \text{Retention}$$

Final weight of sample =
(After test)

(c) Weight of fixture and residual sample - (a) weight of fixture with masking tape

Original weight of sample =
(Before test)

(b) Weight of fixture and original sample - (a) weight of fixture with masking tape

Percent Retention Fixture

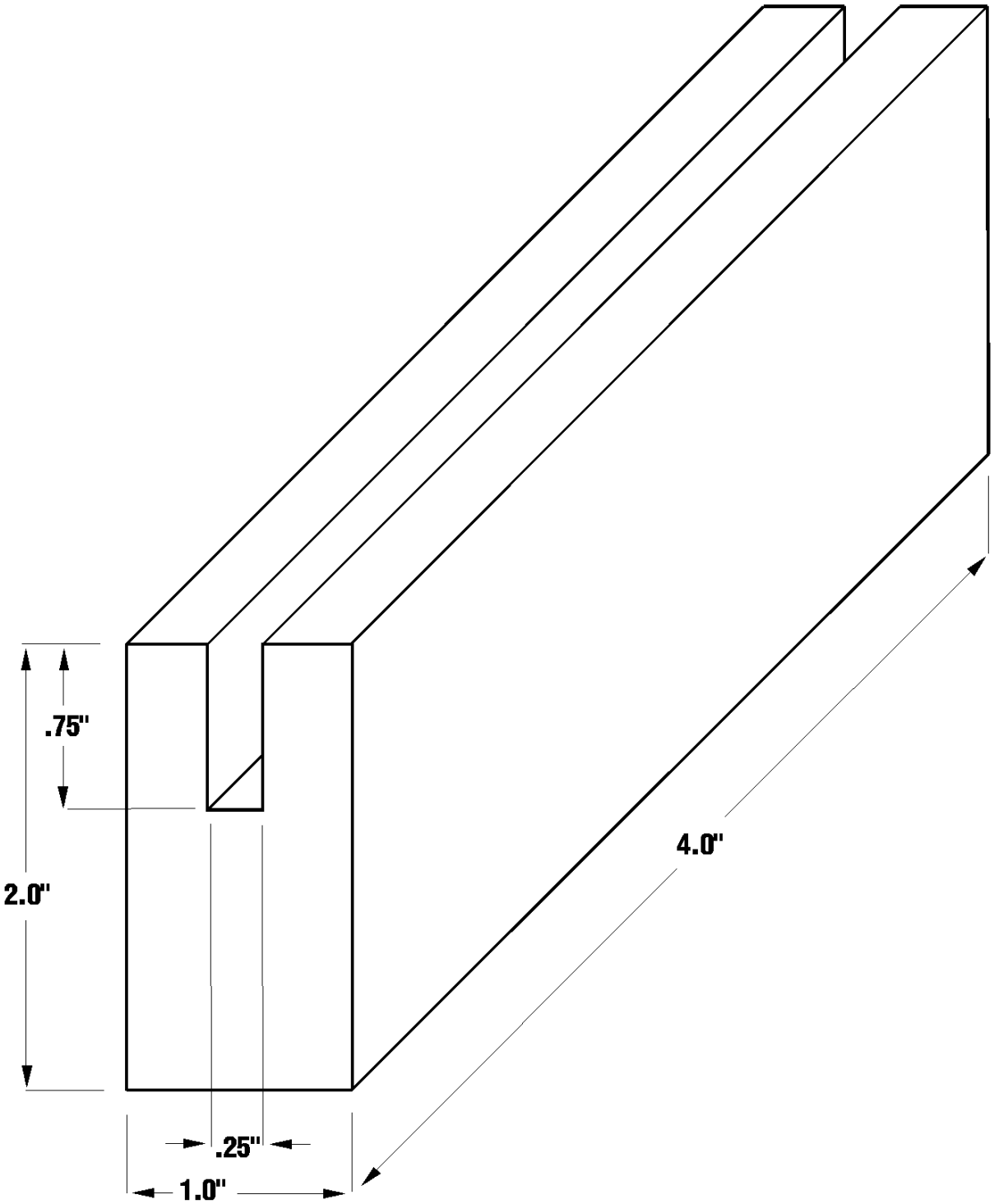

GROUP 5

The purpose of Group 5 is to set forth specification requirements for Traffic Signal hardware, cabinet bases, span wire, span wire clamp and assembly, pull boxes, Astro-Brac, pedestal pole, pedestal base, pedestrian pushbutton, pedestrian clamshell, fiber-optic closures, strand-vise, strand-link, and eyebolt. All design qualification testing shall be completed, documented and submitted with the equipment quotation.

Section 1

Universal Span Wire Clamp Assy / Bullring

1 A. Description

Item 1.Universal Span Wire Clamp, Aluminum with J-Bolts and ¾ " Slot = for signage only = Pelco SE- 5115 or approved equivalent

Item 2.Universal Span Wire Clamp for signal heads = Pelco SE-5089-P33 or approved equivalent.

1 B. Description

Hot dipped galvanized Forged Bullring.

Dimensions = 7/8" x 5 ½" weldless ring with 7.25" outer diameter max

Load Rating = working load of 5600lb

Coating = Must be powder coated.

Example is Item# S-643 7/8" x 5 ½"

Section 2

Pedestrian / Signal Mount Brackets in stand alone applications

SECTION A. A Gloss Black 4" Post Top Adapter shall be placed on top of a 4' aluminum pole in any stand alone single or dual pedestrian installation that uses a pedestrian pedestal base. The part shall be Traffic Parts part #1285/Black or

Pelco SE-5016 -P33. **Pelco SE-3106 PICTURED is NOT allowed.**

SECTION B. A Gloss Black Two Way Top Assembly Bracket shall be provided in dual pedestrian applications to be placed on top of a Black 4" Post Top Adapter. The part # shall be

Traffic Parts part # 937, Pelco SE-5061-P33 Black or approved equivalent**. Item picture below as an assembly.**

.

SECTION C. A Gloss Black Mono Stud Assembly shall be provided and mounted on top of all dual ped assemblies in stand-alone applications. The part shall be Traffic Parts part#936 or equivalent. Refer to diagram in Group 5 Section 14, Page 122 for assembly instructions and parts diagrams. **Item pictured above as an assembly.**

Section 3

Pedestrian Pushbutton Station / Frame

The following specification is for a pedestrian push button frame that would provide a strong and attractive mount for a pedestrian push button and pedestrian sign, to be located at each end of a crosswalk.

1. The push button frame shall be made of cast aluminum with a chemfilm/powder coat finish.
2. The push button frame shall be able to mount to a flat surface, or to a round pole of 2.5” diameter or larger.
3. The push button frame shall have adjustable side brackets to stabilize the unit to the pole.
4. The push button frame shall have two mounting holes spaced six inches apart (center to center) that can accommodate 5/16” or smaller mounting hardware.
5. The push button frame shall have a wire guide hole with a raised sleeve that protects the push button wires as they transition through the wall of the pole/mounting surface. This wire guide hole shall be on the same centerline as the two mounting holes specified in #4 above, and shall be 3 5/16” below the center of the lower mounting hole.
6. The push button frame shall have four tapped 8-32 holes for mounting a push button, and four tapped 8-32 holes for mounting a 5” x 7 ¾” pedestrian sign. These tapped holes shall be stainless steel inserts, or stainless steel helicoils that prevent bi-metal corrosion between the frame and mounting screws.
7. The push button frame shall have the option of adding a 9”x12” aluminum plate to accommodate mounting a 9”x12” pedestrian sign.

Example: Polara PBF9x12-B

Section 4

Pedestrian Pushbuttons

Operating Description:

Buttons must be digitally controlled and virtually vandal proof. The button must place a 150 ms momentary closure and cannot be stuck in a constant call. An LED and audible tones are activated with the pedestrian call. The button shall be configured with a momentary LED acknowledgement. The actuator is pressure sensitive and uses no screws or bolts in the functioning components. The button shall be ADA and MUTCD compliant.

1.

Electrical Specification:

Switch: Piezo electric, isolated with line transient protection

Operating voltage: TS1 and TS2 (12 -24 V ac/dc)

Rated life: >100 X 10_6

Mechanical Data:

Operating pressure: 3-5 N

Degree of protection: 68 IP

Operating temperature: -40 C to +125 C

2.

Feedback:

Visual: momentary LED Superbright Red

Audible: Dee 2300 khz – Daa 2000 Khz, press and release

Momentary LED with Enlightened option

Tactile directional arrow optional

3.

Materials:

Bezel: 6061 T6 Al ingot

Actuator: Machined SS

Field terminals and hardware: SS

Gasket: integral design, solid neoprene

Powder Coated: Textured Black (B),

4.

Ped Pushbutton Round assembly (4 HOLE ONLY ALLOWED)

The pedestrian push button may be rebuilt by adding a new Piezo solid state switch cartridge or a new circuit board if a strike or any other damage is done to the push button allowing a push button to last "forever".
The button mounts with a 2.60 +/- .005" BC to fit most existing 4 bolt round pedestrian stations. **GENERAL SPECIFICATIONS**

Electrical Specifications	
Operating Voltage	12 VAC / 24 VDC
Line Voltage	50 V
Switch Current Max	200-500 mA
On Resistance	< 20 ohm
Operating Mode	N.O.
Closure Dwell	150 ms
Switch	Piezo – Solid State
Operating Data	
Operating Force	3-5 N
Operating Temperature	-40C to 125C
Operating Life	>100 X 10^6
Mechanical Data	
IP Rating	68
Materials Data	
Bezel	AL
Actuator	SS
Hardware	SS
Finish	Powder Coat

1.
.

Section 5

Pedestrian Double Pushbutton Station Adapter

1. The push button frame adapter shall be made of cast aluminum with a chemfilm/powder coat finish.
2. The push button frame adapter shall be able to mount to a 4.5" pedestrian pole.
3. The push button frame adapter shall allow two 9x12 push button stations to mount on a 4.5" pedestrian pole without the need for a push button station to be mounted upside down.

Example: Polara PBFS4.5x2-B or approved Equivalent

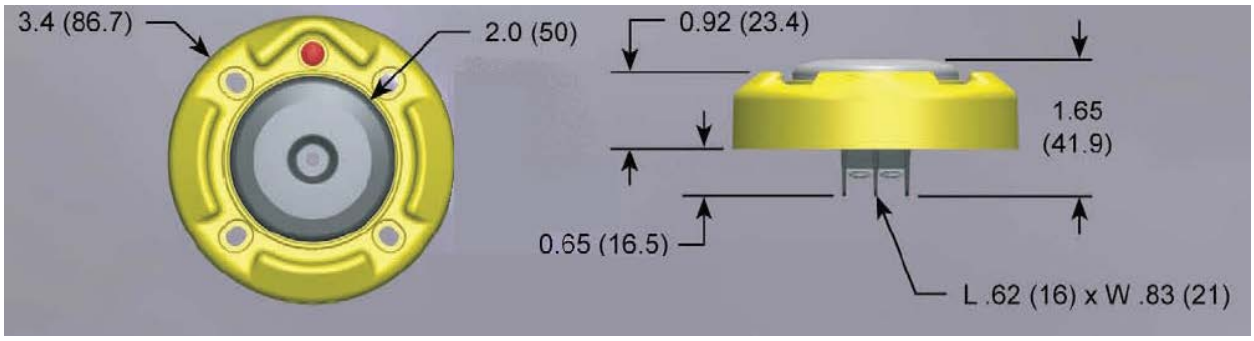

.

Section 6

Pedestrian Pole Signage

All signage unless otherwise noted by Douglas County shall be 9” x 12” in size. specify right or left arrow. The color on the numeric value shall be red in color.

Example: Polara Part #’s 800-85 or approved equivalent

Section 7

Astro-Brac

The Astro-Brac shall be designed to facilitate the mounting of any size or combination of signals to any size and shape of mast arm or pole. This design shall be of Pelco mounts and shall utilize a stranded cable for mounting NOT a bandit material.

Section 8

Pedestrian Clamshell Mount

The clamshell shall be entirely of cast aluminum with integral terminal strip, stainless steel hinges, and a ½” conduit entrance, gloss black in color.

Section 9

Pedestrian Pole/Base (Brushed Aluminum finish)

The pedestal pole shall be made ten (10) feet in height above grade. The shaft shall be manufactured of aluminum alloy 6061 heat tempered to T6, of four (4) inch schedule 40-pipe size. One end shall be threaded, and shall screw into the top of a cast aluminum base. The base shall be **OCTAGONAL** in shape, 14-1/4” in height, and shall be made of aluminum 356 with a T6 temper. A removable, locking access door shall be provided. Four (4) anchor bolts size ¾” x 20” with hex nuts and flat washers (galvanized) shall also be provided. The entire assembly

when carrying signals shall be capable of withstanding one hundred (100) mph wind loads without failure. Use **PB-5100-10** and **PB-5349** or approved equivalent. **Item PB-5349 pictured below.**

Section 10

Fiber Optic Closure

The closure shall be constructed of a chemically resistant material suited for buried applications. The case shall be rigid non-filled and resist severe conditions of moisture, vibration and impact, cable stress and flexing, and temperature extremes. The case shall be expandable using a kit to handle up to four cables in a butt configuration or eight cables in-line. Double stacking the kit shall increase the capacity to six cables in a butt configuration or twelve cables in-line.

Section 11

Strand Vice and Strand Link, Spanwire

Strand-Vises shall meet the following specifications:

Must be a ¼" universal grade strandvise designed for EHS spanwire. **Example Maclean Power Systems part# 5200**

Must be a 3/8" universal grade strandvise designed for EHS spanwire. **Example Maclean Power Systems part# 5202**

Strand-links shall meet the following specifications and rated the same as the Strand-Vises for like sizes:

Must be a ¼" universal grade strandvise designed for EHS spanwire. **Part# 5040**

Must be a 3/8" universal grade strandvise designed for EHS spanwire **Part# 5042**

ALL SPANWIRE MUST BE EHS MODEL SPAN (EXTRA HIGH STRENGTH) 3/8"

Section 12

Forged Eye Bolts

The Oval Eyebolts and Machine Bolts of the same grade shall meet the following specification:

5/8 inch x 6-20 inches – Minimum Tensile Strength shall be 13,550 pounds or 6.775 tons.

¾ inch x 8-18 inches – Minimum Tensile Strength shall be 20,050 pounds or 10.025 tons.

These bolts shall meet one or more of the following: AAR, ANSI, ASTM, CA BELL, IEEE, NEMA, CSA, REA, USTA, AND WU.

Section 13

Steel Strain Poles / Mast Arm Poles

PURPOSE – The purpose of this Section of this specification is to set forth the minimum requirements for Steel Poles, Mast Arms, Anchor Bolts and Luminaire Arms. All design qualification testing shall be completed, documented and submitted with the equipment quotation.

LUMINAIRE ARM

Steel: ASTM A36 MOD 45KSI YIELD, Round Tapered Steel Tube, 11 gauge, 0.14" taper/foot, 2.375" tip O.D., Clamp-On type with a 3 foot rise, ranging from 12 feet to 30 feet in length.

Aluminum: Aluminum Alloy 6063-T6, Round Tapered Aluminum Tube, 0.125 wall, 0.14" taper/foot, 2.375" tip O.D., Clamp-On type with a 3 foot rise, ranging from 12 feet to 30 feet in length.

STEEL STRAIN POLE – The steel strain pole shall be manufactured of hi-strength steel, formed into a tubular shape and welded with one automatic seam weld. The poles shall have an integral base plate, hexagonal in shape, constructed of 1-3/4" thick A36 steel plate. The shaft shall telescope into the base, with fillet welds inside and out. The steel strain pole shall be of size, 3 ga., 13" x 8.52" x 32'. The base shall have a six-bolt hole plate with an 18" bolt circle. The pole shall be provided with six 1-1/2" x 60" anchor bolts cut threads, round, full dimension bar stock conforming to AASHTO M314, Gr.55 The threaded end shall be galvanized, complete with each bolt – two (2) heavy hex nuts, two (2) F436 hardened flat washers, one (1) lock washer. All galvanizing to shall meet or exceed ASTM A153. The pole shall include a 4" x 8" hand-hole with ½"-13 tapped grounding lug, three (3) 2" BHC couplings for wire entrance 30" down from the top, one (1) removable pole top complete, six (6) individual bolt covers for the anchor bolts complete, one (1) hand-hole cover complete, one (1) U-Bolt span wire clamp #9 in size. The following shall be the material specifications:

Tube Steel - Min. 55,000 psi
Base Plate - ASTM A36
Anchor Bolts - Min. 55,000 psi
Misc. Hardware - Stainless Steel
Pole Top - Steel or Aluminum (pressed or cast)
Galv. Finish - ASTM A123

The design shall meet or exceed the Ga. DOT specifications. With each shipment, one additional anchor bolt complete, shall be provided at no charge for possible Ga. DOT testing.

MAST ARM POLE – Steel mast arms and poles shall be manufactured from 1015-1020 basic oxygen hot-rolled sheet, which shall be formed and welded (single seam weld) into a round, tapered, conical shape. This tube shall then be cold-rolled in accordance with ASTM A595, Gr.B to produce a high strength structural tube with a minimum yield strength of 60,000 pounds per square inch. The weld seam shall be rolled flat into the tube, which shall make the seam un-noticeable. The resulting structural tube shall remain its full weld-ability, and shall be available in thicknesses of .1196”, .179”, .250”, and .3125”. A base plate of proper size and shall accommodate four (4) anchor bolts and telescope onto the shaft and be fully welded inside and out. The mast arm pole shall be provided with the appropriate number of anchor bolts cut threads, round, full dimension bar stock conforming to AASHTO M314, Gr.55 The threaded end shall be galvanized, complete with each bolt – two (2) heavy hex nuts, two (2) F436 hardened flat washers, one (1) lock washer. A wiring hand-hole shall be provided approximately 12 inches above the base plate and shall be fabricated by welding a reinforcement frame in the shaft, complete with tapped grounding lug. A removable cover shall be provided. Mast arm poles type IV tubes shall be welded onto a flange plate in the same manner as the base plate described above. The pole shaft shall have a reinforced box mast arm attachment, which matches the arm flange plate.

A

Mast arms shall be attached to the pole with high strength A325 connecting hardware. The design shall be such that an appropriate slope is provided to eliminate sagging. All flange and base plates shall conform to ASTM A36, and all galvanizing shall conform to ASTM A123. All miscellaneous hardware shall be AISI series 300 passivated stainless steel and be provided with each mast arm and pole. Mast arm anchor bolts shall have cut threads, and be manufactured of round, full dimension bar stock conforming AASHTO M314, Gr.55. The threaded ends shall be galvanized. With each bolt there shall be supplied two (2) heavy hex nuts, two (2) F436 hardened flat washers, one (1) lock washer. With each mast arm pole there shall be provided one (1) pole top. With each arm there shall be provided the appropriate size and cap with arm mounting hardware. All other misc. hardware shall be provided to complete the mast arm manufactured. The following chart lists the standard pole/arm length, bending moment, bolt circle, bolt size.

ARM LENGTH SINGLE	BENDING MOMENT	BOLT CIRCLE	BOLT SIZE
15 ft.	36,500 ft. lbs.	12.5 in.	1 ¼ in. x 48 in.
20 ft.	40,750 ft. lbs.	13.0 in.	1 ¼ in. x 48 in.
25 ft.	60,000 ft. lbs.	13.0 in.	1 ½ in. x 60 in.
30 ft.	66,700 ft. lbs.	13.5 in.	1 ½ in. x 60 in.
35 ft.	81,800 ft. lbs.	15.0 in.	1 ½ in. x 60 in.
40 ft.	89,900 ft. lbs.	15.5 in.	1 ½ in. x 60 in.

ARM LENGTH SINGLE	BENDING MOMENT	BOLT CIRCLE	BOLT SIZE
45 ft.	96,900 ft. lbs.	16.0 in.	1 ½ in. x 60 in.
50 ft.	114,200 ft. lbs.	18.0 in.	1 ½ in. x 60 in.
55 ft.	122,700 ft. lbs.	19.0 in.	1 ½ in. x 60 in.
60 ft.	142,250 ft. lbs.	21.0 in.	1 ½ in. x 60 in.
65 ft.	174,500 ft. lbs.	23.5 in.	1 ¾ in. x 90 in.
70 ft.	221,400 ft. lbs.	25.5 in.	1 ¾ in. x 90 in.
75 ft.	234,000 ft. lbs.	26.0 in.	1 ¾ in. x 90 in.
80 ft.	305,400 ft. lbs.	25.5 in.	1 ¾ in. x 90 in.
85 ft.	305,400 ft. lbs.	25.5 in.	1 ¾ in. x 90 in.

ARM LENGTH TANDEM	BENDING MOMENT	BOLT CIRCLE	BOLT SIZE
20 ft. / 20 ft.	90,980 ft. lbs.	13.5 in.	1 ½ in. x 60 in.
25 ft. / 20 ft.	90,980 ft. lbs.	13.5 in.	1 ½ in. x 60 in.
25 ft. / 25 ft.	90/980 ft. lbs.	13.5 in.	1 ½ in. x 60 in.
30 ft. / 20 ft.	110,900 ft. lbs.	15.0 in.	1 ½ in. x 60 in.
30 ft. / 25 ft.	110,900 ft. lbs.	15.0 in.	1 ½ in. x 60 in.
30 ft. / 30 ft.	110,900 ft. lbs.	15.0 in.	1 ½ in. x 60 in.
35 ft. / 20 ft.	110,900 ft. lbs.	15.0 in.	1 ½ in. x 60 in.
35 ft. / 25 ft.	110,900 ft. lbs.	15.0 in.	1 ½ in. x 60 in.
35 ft. / 30 ft.	132,800 ft. lbs.	16.0 in.	1 ¾ in. x 90 in.
35 ft. / 35 ft.	132,800 ft. lbs.	16.0 in.	1 ¾ in. x 90 in.

40 ft. / 25 ft.	121,600 ft. lbs.	15.5 in.	1 ¾ in. x 90 in.
ARM LENGTH TANDEM	**BENDING MOMENT**	**BOLT CIRCLE**	**BOLT SIZE**
40 ft. / 30 ft.	132,800 ft. lbs.	16.0 in.	1 ¾ in. x 90 in.
40 ft. / 35 ft.	132,800 ft. lbs.	16.0 in.	1 ¾ in. x 90 in.
40 ft. / 40 ft.	132,800 ft. lbs.	16.0 in.	1 ¾ in. x 90 in.
45 ft. / 25 ft.	132,800 ft. lbs.	16.0 in.	1 ¾ in. x 90 in.
45 ft. / 30 ft.	132,800 ft. lbs.	16.0 in.	1 ¾ in. x 90 in.
45 ft. / 35 ft.	132,800 ft. lbs.	16.0 in.	1 ¾ in. x 90 in.
45 ft. / 40 ft.	156,000 ft. lbs.	18.0 in.	1 ¾ in. x 90 in.
45 ft. / 45 ft.	156,000 ft. lbs.	18.0 in.	1 ¾ in. x 90 in.
50 ft. / 25 ft.	156,000 ft. lbs.	18.0 in.	1 ¾ in. x 90 in.
50 ft. / 30 ft.	156,000 ft. lbs.	18.0 in.	1 ¾ in. x 90 in.
50 ft. / 35 ft.	156,000 ft. lbs.	18.0 in.	1 ¾ in. x 90 in.
50 ft. / 40 ft.	174,500 ft. lbs.	23.5 in.	1 ¾ in. x 90 in.
50 ft. / 45 ft.	174,500 ft. lbs.	23.5 in.	1 ¾ in. x 90 in.
50 ft. / 50 ft.	174,500 ft. lbs.	23.5 in.	1 ¾ in. x 90 in.
55 ft. / 25 ft.	174,500 ft. lbs.	23.5 in.	1 ¾ in. x 90 in.
55 ft. / 30 ft.	174,000 ft. lbs.	23.5 in.	1 ¾ in. x 90 in.
55 ft. / 35 ft.	182,400 ft. lbs.	20.0 in.	1 ¾ in. x 90 in.
55 ft. / 40 ft.	182,400 ft. lbs.	20.0 in.	1 ¾ in. x 90 in.
55 ft. / 45 ft.	210,000 ft. lbs.	22.0 in.	1 ¾ in. x 90 in.
55 ft. / 50 ft.	210,000 ft. lbs.	22.0 in.	1 ¾ in. x 90 in.
55 ft. / 55 ft.	210,000 ft, lbs.	22.0 in.	1 ¾ in. x 90 in.

60 ft. / 25 ft.	174,500 ft. lbs.	23.5 in.	1 ¾ in. x 90 in.
ARM LENGTH TAMDEM	**BENDING MOMENT**	**BOLT CIRCLE**	**BOLT SIZE**
60 ft. / 30 ft.	174,500 ft. lbs.	23.5 in.	1 ¾ in. x 90 in.
60 ft. / 35 ft.	210,000 ft. lbs.	22.0 in.	1 ¾ in. x 90 in.
60 ft. / 40 ft.	210,000 ft. lbs.	22.0 in.	1 ¾ in. x 90 in.
60 ft. / 45 ft.	210,000 ft. lbs.	22.0 in.	1 ¾ in. x 90 in.
60 ft. / 50 ft.	210,000 ft. lbs.	22.0 in.	1 ¾ in. x 90 in.
60 ft. / 55 ft.	239,800 ft. lbs.	23.5 in.	1 ¾ in. x 90 in.
60 ft. / 60 ft.	239,800 ft. lbs.	23.5 in.	1 ¾ in. x 90 in.
65 ft. / 30 ft.	210,000 ft. lbs.	22.0 in.	1 ¾ in. x 90 in.
65 ft. / 35 ft.	210,000 ft. lbs.	22.0 in.	1 ¾ in. x 90 in.
65 ft. / 40 ft.	210,000 ft. lbs.	22.0 in.	1 ¾ in. x 90 in.
65 ft. / 45 ft.	239,800 ft. lbs.	23.5 in.	1 ¾ in. x 90 in.
65 ft. / 50 ft.	239,800 ft. lbs.	23.5 in.	1 ¾ in. x 90 in.
65 ft. / 55 ft.	239,800 ft. lbs.	23.5 in.	1 ¾ in. x 90 in.
65 ft. / 60 ft.	239,800 ft. lbs.	23.5 in.	1 ¾ in. x 90 in.
65 ft. / 65 ft.	239,800 ft. lbs.	23.5 in.	1 ¾ in. x 90 in.
70 ft. / 35 ft.	239,800 ft. lbs.	23.5 in.	1 ¾ in. x 90 in.
70 ft. / 40 ft.	239,800 ft. lbs.	23.5 in.	1 ¾ in. x 90 in.
70 ft. / 45 ft.	271,500 ft. lbs.	24.0 in.	1 ¾ in. x 90 in.
70 ft. / 50 ft.	305,400 ft. lbs.	25.5 in.	1 ¾ in. x 90 in.
70 ft. / 55 ft.	305,400 ft. lbs.	25.5 in.	1 ¾ in. x 90 in.
70 ft. / 60 ft.	336,000 ft. lbs.	28.0 in.	2 in. x 90 in.

70 ft. / 65 ft.	336,000 ft. lbs.	28.0 in.	2 in. x 90 in.
ARM LENGTH TAMDEM	**BENDING MOMENT**	**BOLT CIRCLE**	**BOLT SIZE**
70 ft. / 70 ft.	336/000 ft. lbs.	28.0 in.	2 in. x 90 in.
75 ft. / 35 ft.	271,500 ft. lbs.	24.0 in.	1 ¾ in. x 90 in.
75 ft. / 40 ft.	271,500 ft. lbs.	24.0 in.	1 ¾ in. x 90 in.
75 ft. / 45 ft.	271,500 ft. lbs.	24.0 in.	1 ¾ in. x 90 in.
75 ft. / 50 ft.	305,400 ft. lbs.	25.5 in.	1 ¾ in. x 90 in.
75 ft. / 55 ft.	305,400 ft. lbs.	25.5 in.	1 ¾ in. x 90 in.
75 ft. / 60 ft.	336,000 ft. lbs.	28.0 in.	2 in. x 90 in.
75 ft. / 65 ft.	336,000 ft. lbs.	28.0 in.	2 in. x 90 in.
75 ft. / 70 ft.	336,000 ft. lbs.	28.0 in.	2 in. x 90 in.
75 ft. / 75 ft.	336,000 ft. lbs.	28.0 in.	2 in. x 90 in.

Group 5 Section 14 Ped Signal Hardware Diagrams

Group 5
Section 14
hardware diagrams

TOP VIEW OF ASSEMBLY

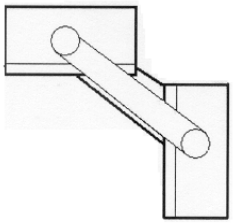

SIDE VIEW OF DUAL PED GROUND MOUNT APPLICATION

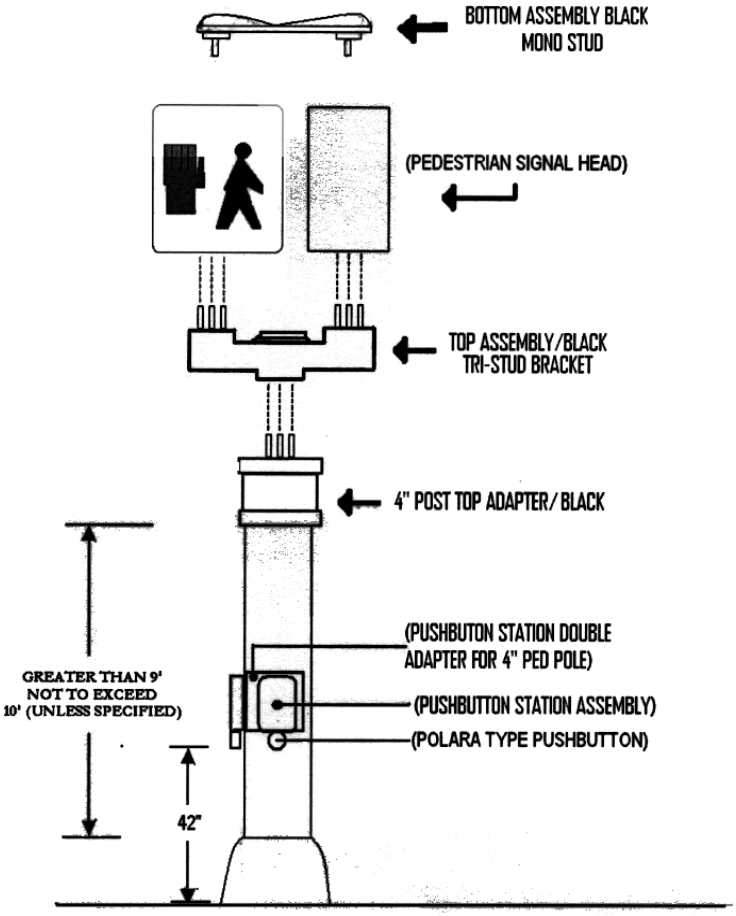

POLARA ENGINEERING INC. 4115 ARTESIA AVE., FULLERTON, CA 92833 (888) 340-4872

PBFS4.5X2-X - Spacer for mounting two 9X12 Push Button Frames on a 4.5" pole

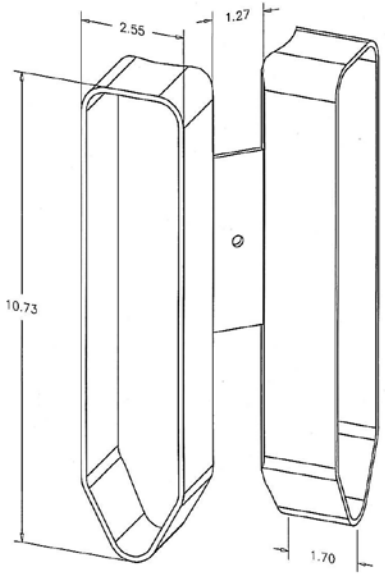

This spacer is designed to offset two Push Button Frames on a 4.5" diameter pole so that two 9" x 12" signs can be mounted without conflict. One spacer is used to mount two Push Button Frames. The spacer is held to the pole by a bolt in the center and the frames mount to the pole with 3" long bolts through the spacer.

The adapter is made of powder coated aluminum. It is available in three colors to match the standard colors of the Push Button Frames. To specify a color, replace the -X in the part number with the following:

- -B for Black
- -G for Green
- -Y for Yellow

Install instructions are available on our website.

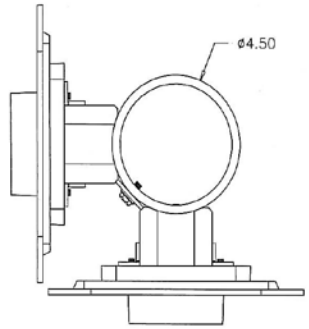

© 2007 Polara Engineering, Inc.

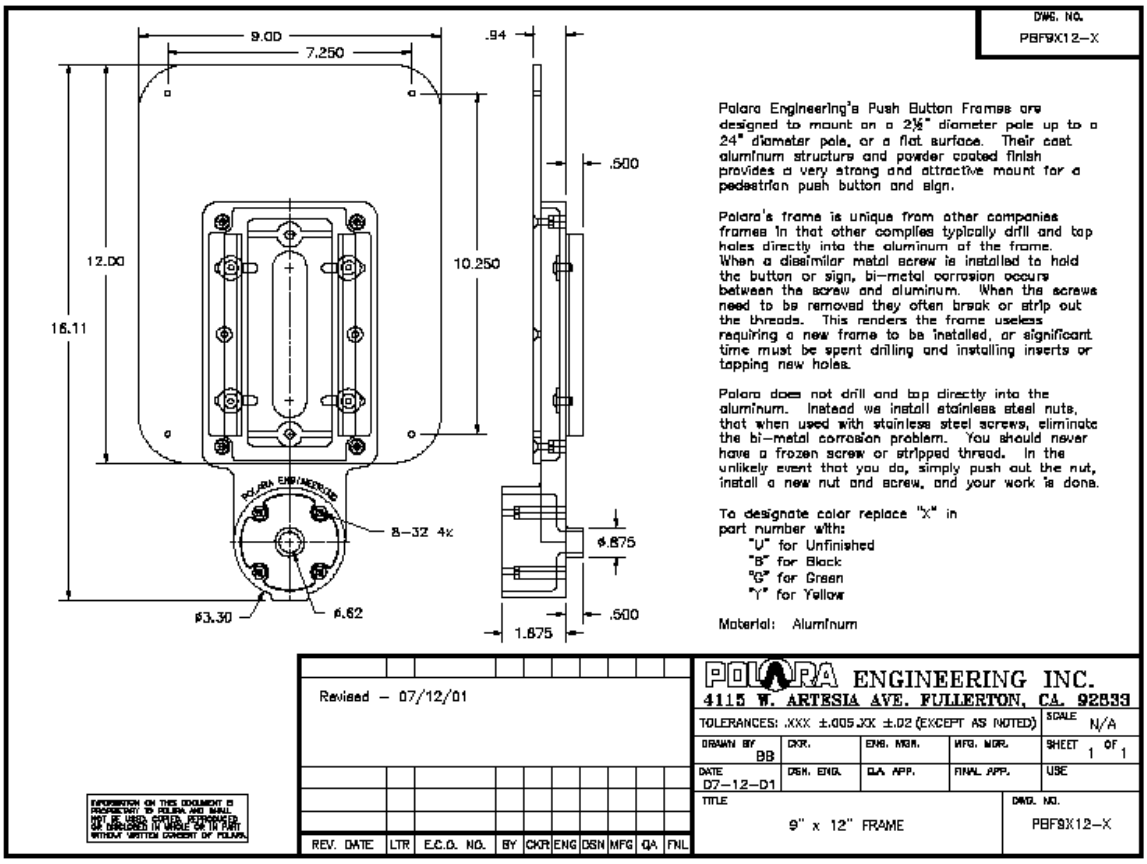

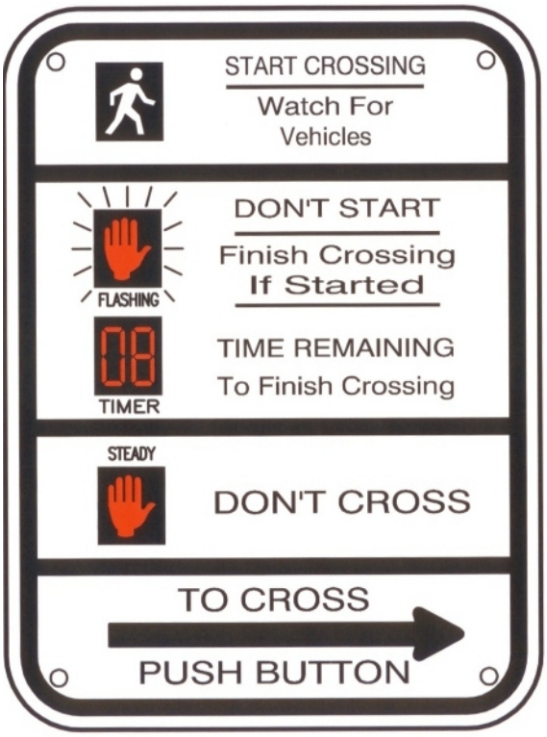

800-85

COUNTDOWN SIGN
Option C
9"x12"
Right/Left Arrow
MUTCD R10-3e

NOTE: Double Sided Sign
Side A - Arrow Points to the Left
Side B - Arrow Points to the Right

Section 15

Couplings used to connect HDPE and PVC conduit

Couplings used to connect HDPE directional bore conduit and PVC conduit shall meet or exceed the following specifications:

1. Shall be made of 100% aluminum
2. Shall have serrated teeth inside so that inserted conduit cannot be pulled free (no threads)
3 Shall be available in 1” x 4” sizes and 2” x 4” sizes

Example item: Georgia Underground item # CT AB2375 or approved equivalent.

Section 16

Mast Arm Sign Mounting Equipment

1. Equipment shall mount to a mast arm using a solid stainless steel cable that is terminated on BOTH ends using stainless steel threaded studs.
2. Equipment shall use (1) 1.5” aluminum gusset tube to secure the sign to the sign mount apparatus.
3. Equipment shall use (1) sign mount bracket for every 4 feet of sign face spaced evenly.

Example: Pelco AS-0144 or approved equivalent.

Section 17

Spanwire Sign Mounting Equipment

1. Equipment shall mount to 3/8” spanwire in a method that uses an aluminum bracket with serrated teeth that has (2) “j hook” bolts. The “j hook” bolts shall be galvanized metal.
2. The sign support plate shall have serrated teeth and a center oriented hole used to adjust the angle at which a sign will hang. The sign support plate at a minimum shall provide no less than (4) holes to attach to a sign plate.
3. A sign hanger shall be placed every 4 feet along a sign.

Example: Pelco SE-5115 or
Approved equivalent.

Group 6

Section 1
CABLES AND WIRE

6.1 PURPOSE – The purpose of this Group 6 of this specification is to set forth the requirements for Power cable, Loop cable, Signal cable, Ground cable, Fiber-Optic cable. All design qualification testing shall be completed, documented, and submitted with the equipment quotation.
Note: All spools for the cable and wire shall be either wood or metal.

6.2 POWER CABLE – The power cable shall be duplex. For overhead the cable shall meet or exceed the following ASTM specifications. B-230 aluminum wire, 1350-H19 for electrical purposes. B-231 aluminum conductors, concentric-lay-stranded. B-232 aluminum conductors, concentric-lay-stranded coated steel, reinforced (ACSR). B-399 concentric-lay-stranded 6201-T81 aluminum alloy conductors. Shall meet or exceed all applicable requirements of ICEA S-61-402 for polyethylene insulated conductors and ICEA S-66-524 for cross-linked polyethylene. Conductors are concentrically stranded, compressed 1350-H19 aluminum, insulated with either polyethylene or VIP (vulcanized interlinked polyethylene). Neutral messengers shall be concentrically stranded bare 6201, AAC or ACSR. Phase conductor size #6 AWG stranding 7, insulation thick (mils) 45. Bare neutral messenger size #6 AWG stranding 6/1, rated strength lbs. 1190. Weight per 1000 ft. (lbs) VIP 78.3, poly 74.6. Ampacity (amps) VIP 70, poly 70. For UG duplex 600 volts shall meet or exceed the following ASTM specifications. B-230 aluminum wire, 1350-H19 for electrical purposes. B-231 aluminum conductors, concentric-lay-stranded duplex shall meet or exceed all applicable requirements of ICEA S-66-524 for cross-linked polyethylene insulated conductors. Conductors are concentrically stranded, compressed 1350-H19 aluminum, unipass insulated with VIP (vulcanized interlinked polyethylene, cross-linked polyethylene). Neutrals are triple yellow extruded stripe. Phase conductors; size (AWG or KCM) 6-stranding 7, insulation thick (mils) 60. Dimensions single phase cond. 299, complete cable 598. Weight per 1000 ft. (lbs.) 104. Ampacity (amps), direct burial 95 in ducts 70.

6.3 LOOP DETECTION WIRE – Loop detection single wire conductor shall have cross-linked Polyethylene insulation, rated at 600 volts, 90 degrees C and meet or exceed the requirements of the International Municipal Signal Association, Inc. (IMSA) specification No. 51-3, XHHW, black in color, size 14 AWG stranded.

6.4 LOOP DETECTION LEAD-IN CABLE – Single pair loop detection shall have one twisted pair with polyethylene insulation, aluminum/polyester tape shield with drain wire. The cable shall have an overall polyethylene jacket, rating of 600 volts, size 14 AWG stranded. The cable shall meet or exceed the requirements of the International Municipal Signal Association, Inc. (IMSA) specification No. 50-2.
Three pair loop detection shall be twisted pair conductors, 18 AWG stranded, tinned copper with poly insulation, Shields shall be of Mylar/aluminum foil tape with stranded, tinned copper drain wire on each pair. Each pair shall be individually shielded. Color gray, 16/30 nominal insulation thickness (inches) .016, nominal jacket thickness (inches) .045 nominal O.D. (inches) .400 (3p18T16 EPS).

6.5 SIGNAL CABLE – Signal cable shall be multi conductor having polyethylene insulation and an overall polyethylene jacket, rated at 600 volts, sunlight resistant, 14 AWG stranded. The cable shall meet or exceed the requirements of the International Municipal Signal Association, Inc. (IMSA) specification No. 20-1.

6.6 FIBER-OPTIC CABLE – Fiber-Optic cable shall consist of the following features. Fiber shall be CORNING GLASS optical and mechanical levels of consistency. Flexible buffer tubes for easier to route in closure. Buffer tubes shall be the same tube size. SZ-standard, loose tube design. Dielectric strength member shall have no preferential bend and require no bonding or grounding. PE sheath shall be rugged, durable and easy to strip. The PE sheath shall have the manufacturer, footage and Douglas County DOT mark, minimum every three (3) feet. Maximum tensile loading, (Installation 2700 N [600 lb.]), (Long term installed, 890 N [200 lb.]). Operating Temperature, (Storage –40 to +70 degree C [-40 to +158 F]), long term, (-40 to +70 degree C [-40 to +158 F]).

Fiber Count	Max Fiber Per Tube	Number of Tube Position	Number of Active Tubes	Central Member	Nominal Weight kg/km (lb/1000 ft)	Nominal Outer Diameter mm (in)	Minimum Bend Radius	
							Loaded cm (in)	Installed cm (in)
1-36	6	5	1-3	Dielectric	91 (61)	11.6 (0.46)	17.4 (6.9)	11.6 (4.6)
37-60	12	5	4-5	Dielectric	97 (65)	11.8 (0.46)	17.7 (7.0)	11.8 (4.6)

6.7 VIDEO COAXIAL CABLE – The video coaxial cable shall be printed with the following legend; TRAFFIC CONTROL CABLE 16-3C 600V/PRECISION VIDEO "DIR BUR" "SUN RES" MFG BY ISOTEC. The specifications for the video coaxial cable are as follows:

1 ST COMPONET

AWG (Strand) Size/Type Nom. D.C.R.	**Dielectric Type Nom. Od**	**Shield Type Coverage Nom. D.C.R.**	**Jacket Type & Thickness**	**Cable Color & Jacket OD**	**Nom. Cap. pF/ft pF/m.**	**Vel. Of Prop.**	**Nom. Imp.**
20 AWG Solid BC 10.2 Ohms/M' 33.1 Ohms/km	Solid Polyethylene .198"	98% TC X 2 1.1 Ohms/M' 3.6 Ohms/km	Polyethylene .035"	Black .304"	20.9 pF/ft 68.7 pF/m	67%	75Ohms

ATTENUATION

Frequency **MHz**	Nom. Atten. **(dB/100ft)**	Nom. Atten. **(dB/100m)**
1	0.29	0.95
3.58	0.51	1.67
5	0.60	1.97
7	0.70	2.30
10	0.82	2.69
67.5	2.16	7.08
71.05	2.22	7.28
100	2.66	8.72
135	3.12	10.23
143	3.20	10.50
180	3.61	11.84
270	4.53	14.86
360	5.32	17.45
540	6.68	21.91
720	7.86	25.78
1000	9.60	31.49

2 ND COMPONENT

No. of Conductors	**Conductor Size and Material**	**Insulation Type & Thickness**	**Color Code**	**Nom. Capacitance**	**Nom. Impedance**	**Jacket type & Thickness**	**Jacket O.D. & Color**
3	16 AWG 19/29 BC	HDPE .015”	Black, White, Green	17.6 pF/ft 57.75 pF/m	86.33 Ohms	PVC .015+/- .003”	.221”+/- .005” Black

Isotec Product Number UL Style	**Jacket Type & Thickness**	**Cable Color & Jacket OD**	**Copper Weight LBS/MFT**	**Shipping Weight LBS/MFT**
X531787-00 UL: n/a CSA: n/a	PE .030” +/- .005”	BLACK .592” +/- .005”	59.86 LBS/MFT	158 LBS/MFT

GROUP 7
Sections 1,2,3
MODEMS

7.1..PURPOSE – The purpose of this Group 7 of this specification is to set forth the requirements for External Faxmodems, Single-Mode and Multi-Mode Drop and Repeat Data Transceiver both internal and external. All design qualification testing shall be completed, documented, and submitted with the equipment quotation.

7.2 EXTERNAL FAXMODEM – The external faxmodem shall be capable of receiving downloads at up to 56 Kbps and sending at up to 31.2 Kbps. The external faxmodem shall be run over analog phone lines. The modem shall include controller serial interface, AC power adapter, phone cord, and installation instructions. The warranty for this modem shall be for a period of five (5) years from the date of purchase that the product will be free from defects in materials and workmanship.

7.3 DROP AND REPEAT DATA TRANSCEIVER – The transceiver shall be a fully digital unit designed for implementing simplex or full duplex drop and repeat poll and respond traffic signalization/communications data networks utilizing two (2) optical fibers. The master configured transceiver unit shall be able to be placed within a network system to handle upstream and downstream communication requirements. The transceiver unit should be capable of operating either in conventional single-master/multiple local network architecture, or in a dual-master/bus multiple local configurations. Manually re-settable anti-streaming should be included to provide for unparalleled network protection. The transceiver unit shall include a battery backup to maintain continuous communications channel operations in the event of a local 115 VAC power loss. The transceiver unit shall meet or exceed NEMA TS-1/TS-2 & Caltrans Traffic Signal Control Equipment Specifications for Operating Temperature, Humidity, Shock, Vibration and Voltage Transient Protection. The transceiver unit should be available as either a stand-alone or rack-mounted configuration. Units shall include all connectors for Power, Data, and Optical.

7.4 General Requirements:

Data Rate:	DC to 100 kbps
Bit Error Rate:	<1 in 10^-9 @ Max Optical Loss
Budget	
Anti-Streaming Time-out:	4, 8, 16, 32, 64 Seconds, or Infinity
(disabled)	
Operating Mode:	Asynchronous, Simplex or Full
Duplex	
Wavelength:	1310 nm, Multimode
	1310 nm, Single-mode
Number of Fibers:	2 In/2 Out
Optical Emitter:	1310 nm, Multimode: LED
	1310 nm, Single-mode: Laser Diode
LED Indicators:	Transmit data, Optical Channel 1
(TD-1)	
	Receive data, Optical Channel 1
(RD-1)	

(TD-2)	Transmit data, Optical Channel 2
(RD-2)	Receive data, Optical Channel 2
	Power On (PWR)
	Fault/Anti-streaming Activated
	Request to Send (RTS)
	Clear to Send (CTS)
Power Surface Mount:	12 VDC @ 250 mA
Power Rack Mount:	From Rack
Circuit Board:	Meets IPC Standard
Size (in./cm.) (L x W x H):	7.0 x 4.9 x 1.0 in., 17.8 x 12.5 x 2.5 cm.
ENVIROMENTAL:	
MTBF:	> 100,000 hours
Operating Temp:	-40 degrees C to +74 degrees C, ambient
Storage Temp:	-40 degrees C to +85 degrees C, ambient
Relative Humidity:	0% to 95% (non-condensing)
Battery Backup:	Internal, Rechargeable Nickel Metal Hydride (NIMH) Battery
	Operating Period: 12 hours min.
Sensitivity:	1 uw (-30 dBm)
Max. Optical Transmission Distance:	Single-mode: 42 miles (69 km) Multimode: 8 miles (14 km)
Optical Power Budget:	Single-mode: 23dB Multimode: 14 dB
Output Power:	Single-mode: 200uw (-7 dBm) Multimode: 25 uw (-16 dBm)

Example: I.F.S. D9130-B or equivalent.

GROUP 8 PRIORITY CONTROL SYSTEM
Section 1

Infrared Activated, Data-Encoded, Traffic Signal Priority Control System

8.1 SYSTEM DESCRIPTION - The required priority control system will employ data-encoded infrared communication to identify the presence of designated priority or probe vehicles. A record of system users by vehicle classification and identification number shall be created. In priority vehicle mode, the data-encoded communication will request the traffic signal controller to advance to and/or hold a desired traffic signal display selected from phases normally available. In probe vehicle mode, no traffic signal priority is requested – only a record of the probe vehicle's presence is generated.

The priority control system will consist of a matched system of data-encoded emitters, infrared detectors, detector cable, phase selectors and system software. **All equipment supplied shall match exactly the existing priority control system installed in Douglas County.**

The emitter will generate an infrared, data-encoded signal. The data-encoded signal will be detected and recognized by the infrared detectors at or near the intersection over a line-of-sight path of up to 2,500 feet (762m) under clear atmospheric conditions. The phase selector will process the electrical signal from the detector to ensure that the communication (1) is a valid base frequency, (2) is correctly data encoded, and (3) is within user-settable range. If these conditions are met, the phase selector will generate a priority control request (i.e., a green light) for the approaching priority vehicles, or record the presence of approaching probe vehicles by classification and identification number.

The system will require no action from the vehicle operator other than to turn the emitter on. The syste will operate on a first-come, first-served basis. Higher priority (Command) requests will override lower priority (Advantage) requests. The system will interface with most traffic signal controllers and will not compromise normal operation or existing safety provisions.

8.2 MATCHED SYSTEM COMPONENTS - The required priority control, data-encoded, infrared communications system will be comprised of fie basic matched components: data-encoded emitter, infrared detector, detector cable, phase selector and system software. In addition, a card rack and an electromechanical interface card shall be available if required. To ensure system integrity, operation and compatibility, all components will be from the same manufacturer. The system will offer compatibility with most signal controllers, e.g., electromechanical, NEMA (National Electrical Manufacturers Association), 170. Interfacing to an electromechanical controller may require the use of an interface card.

A. Data-Encoded Emitter. The data-encoded emitter will trigger the system. It will send the encoded infrared signal to the detector. It will be located on the priority or probe vehicle.

B. Infrared Detector. The detector will change the infrared signal to an electrical signal. It will be located at or near the intersection. It will send the electrical signal, via the detector cable, to the phase selector.

C. Detector Cable. The detector cable will carry the electrical signal from the detector to the phase selector.

D. Phase Selector. The phase selector will accommodate data-encoded communication and will validate, identify, classify and record the signal from the detector. It will be located within the controller cabinet at the intersection. It will request the controller to provide priority to the requesting vehicle and/or record presence of a probe vehicle.

E. System Software. The system software will be a Windows 95 compliant program. It supports system configuration and gathering of operational information.

F. Card Rack. The card rack will provide simplified installation of a phase selector into controller cabinets that do not already have a suitable card rack.

G. Electromechanical Card. The electromechanical card shall provide electrical interface between the phase selector and electromechanical-type traffic controllers.

8.3 SYSTEM COMPONENT SPECIFICATIONS

A. Data-Encoded Infrared Emitter and Programming Software

1.The required data-encoded emitter will generate the infrared signal, which serves as the trigger to the rest of the priority control system. The infrared signal generated by the data encoded emitter will be a series of intense flashes from a single light source with integral power supply. The flash signal will consist of a fixed frequency base signal and a coded overlay signal that can be used to transmit information.

2. The data-encoded emitter will be powered by the DC voltage supplied from the vehicle's battery, 10 to 16 volts DC. The unit will be equipped with a weatherproof in-line fuse holder and a weatherproof quick-disconnect plug.

3. The unit, including all electronics, shall be miniaturized to a size no greater than 5.900 inches (14.986 cm) wide by 3.800 inches (9.652 cm) high by 3.500 inches (8.890 cm) deep to accommodate standalone and internal lightbar installation.

4. The data-encoded emitter will be supplied complete with a 25 foot (8.0m) installation cable.

5. The flash sequence generated by the data-encoded emitter will carry three types of information:

a. The first type will be one of three distinctly different base frequencies of either.63855Hz ±0.0014Hz for an Advantage priority emitter, or 14.035O9Hz ±0.003Hz for a Command priority emitter, or 1 1.25873Hz ±0.001 9OHz for Probe frequency.

b. The second type of information generated by the data-encoded emitter will be a vehicle classification and identification code that is interleaved into the base frequency flashes. Setting the vehicle classification and identification code will be accomplished through emitter programming software. Each data-encoded emitter will be capable of setting 10 different classifications with 1,000 different identification numbers per class for a total of 10,000 codes per base frequency.

c. The third type of information generated by the data-encoded emitter will be reserved for setting the intersection detection range. The system will enable the traffic engineer to activate the range code from his/her vehicle using a specially equipped emitter control module with a range setting command switch. The system will accommodate setting a separate range from 200 feet (61 m) to **2,500** feet (762m) for both Command and Advantage priority signals.

6. The emitter will include a multi-purpose port compliant with the **SAEJ1708** communication standard. This port enables unit configuration to be set into the emitter and read from the emitter.

7. While operating, the data-encoded emitter will conduct self-diagnostics designed to monitor data transmission integrity by checking for missing pulses. Any failures of the self-diagnostic tests shall be displayed by flashing of the ON/OFF switch indicator light.

8. An ON/OFF switch (available for each data-encoded emitter) will be equipped with an indicator light providing internal diagnostics to assist in troubleshooting. The indicator light will operate as follows:

a. Steady on when the emitter is operating
b. Flash at a 0.5Hz rate when the emitter is intentionally disabled

c. Flash at a 4Hz rate when the emitter is inoperative

9. The data-encoded emitter will be equipped with a disable input that, when activated, will cease unit operation, thereby eliminating the possibility of inadvertent signal transmission after the priority vehicle has arrived at its destination. Operation of the disable input shall be programmable using software.

10. The data-encoded emitter shall be available with an optional visible light-blocking filter.

11. The data-encoded emitter shall be configured with a grating to provide precise directionality control.

12. The data-encoded emitter shall have a consistent flash intensity. The energy output per flash shall be 0.84 Joules.

13. The data-encoded emitter will operate over a temperature range of –30°F (-34°C) to +165°F (+74°C).
14. The data-encoded emitter will operate over a relative humidity range of 5% to 95%.

15. Windows™ based software shall be available for programming the emitter through its J1708 compatible multi-purpose port.

B. Infrared Detector

1. The required detector will be a lightweight, weatherproof device capable of sensing and transforming pulsed infrared energy into electrical signals for use by the phase selection equipment.

2. The infrared detector will be designed for mounting at or near an intersection on mast arms, pedestals, pipes or span wires.

3. Each infrared detector will be supplied with mounting hardware to accommodate installation on mast arms. Additional hardware shall be available for span wire installations.

4. The infrared detector design shall include adjustable tubes to enable their reorientation for span wire mounting without disassembly of the unit.

5. The detector will accept infrared signals from one or two directions and will provide single or dual electrical output signal(s).

6. The infrared detector will be available in three configurations:

a. Uni-directional with one output channel.
b. Bi-directional with one output channel.
c. Bi-directional with two output channels.

7. The detector will allow aiming of the two infrared sensing inputs for skewed approaches or slight curves.

8. The infrared detector will have a built-in terminal block to simplify wiring connections.

9. The infrared detector will receive power from the phase selector and will have internal voltage regulation to operate from 18 to 37 volts DC.

10. The infrared detector will respond to a clear lens data-encoded emitter with 0.84 (±10%) Joules of energy output per flash at a distance of 2,500 feet (762m) under clear atmospheric conditions. If the emitter is configured with a visible light filter, the detector will respond at a distance of 1800 feet (549m) under clear atmospheric conditions. The noted distances shall be comparable day and night.

11. The infrared detector will deliver the necessary electrical signal to the phase selector via a detector cable up to 1,000 feet (305m) in length.

C. Detector Cable

1. The detector cable shall deliver sufficient power from the phase selector to the infrared detector and will deliver the necessary quality signal from the detector to the phase selector over a non-spliced distance of 1,000 feet (305m).

2. The cable will be of durable construction to satisfy the following installation methods:

a. Direct burial.
b. Conduit and mast arm pull.
c. Exposed overhead (supported by messenger wire).

3. The outside diameter of the detector cable will not exceed 0.3 inches (7.62mm).

4. The insulation rating of the detector cable will be 600 volts minimum.

5. The temperature rating of the detector cable will be +158°F (+70°C) minimum.

6. The conductors will be shielded with aluminized polyester and have an AWG #20 (7 x 28) stranded and individually tinned drain wire to provide signal integrity and transient protection.

7. The shield wrapping will have a 20% overlap to ensure shield integrity following conduit and mast arm pulls.

8. The detector cable will have four conductors of AWG #20 (7 x 28) stranded, individually tinned copper, color-coded insulation as follows:

a. Orange for delivery of detector power (+).
b. Drain wire for detector power return (-).
c. Yellow for detector signal #1.
d. Blue for detector signal #2 or ground, depending on model.

9. The characteristic impedance of the detector cable shall be:
0.6ohms/1000’

14.3uF/1000’

D. Phase Selector

1.The phase selector, designed to be installed in the traffic controller cabinet, will accommodate data-encoded signals and is intended for use directly with numerous controllers. These include California/New York Type 170 controllers with compatible software, NEMA controllers, or other controllers along with the system card rack and suitable system interface equipment and controller software.

2. The phase selector will be a plug-in, two or four channel, multiple-priority device intended to be installed directly into a card rack located within the controller cabinet.

3. The phase selector will be powered from 115 volt (95 volts AC to 135 volts AC), 60Hz mains and will contain an internal, regulated power supply that supports up to twelve infrared detectors.

4. Programming the phase selector and retrieving the data stored in it will be accomplished using an IBM PC-compatible computer and the system interface software. The connection can be made either directly, via the computer’s communication (COM) port, or remotely via a modem. The communication port on the phase selector will be an RS232 interface located on the front and back of the unit..

5. The phase selector shall include the ability to directly sense the green traffic controller signal indications through the use of dedicated sensing circuits and wires connected directly the field wire termination points in the traffic controller cabinet.

6. The phase selector will have the capability of storing up to 1000 of the most recent priority control calls, probe frequency passages, or unauthorized vehicle occurrences. When the log is full, the phase selector will drop the oldest entry to accommodate the new entry. The phase selector will store the record in non-volatile memory and will retain the record if power terminates. Each record entry will include ten points of information about the priority call, as follows:

a. Classification: Indicates the type of vehicle.

b. Identification number: Indicates the unique ID number of the vehicle.

c. Priority level: Indicates whether Command or Advantage priority, or Probe frequency is requested by the vehicle.

d. Direction: Channel A, B, C, or D; Indicates the vehicle’s direction of travel.

e. Call duration: Indicates the total time in seconds the priority status is active.

f. Final greens at end of call: Indicates which phases are green.

g. Duration of final greens: Indicates the total time of priority greens.

h. Time and date call ended: Indicates the time a priority status ended; Provided in second, minute, hour, day, month, year.

i. Maximum signal intensity: Indicates the strongest signal intensity measured by the phase selector during call.

j. Priority output active: Indicates if the phase selector requested priority from the controller for the call.

7. The phase selector will include several control timers that will limit or modify the duration of a priority control condition, by channel, and can be programmed from an IBM PC-compatible computer. The control timers will be as follows:

a. MAX CALL TIME: Will set the maximum time a channel is allowed to be active. It will be settable from 120 to 65,535 seconds in one-second increments. Its factory default must be the maximum time.

b. CALL HOLD TIME: Will set the time a call is held on a channel after the priority signal is no longer being received. It will be settable from one to 255 seconds in one-second increments. Its factory default must be six seconds.

c. CALL DELAY TIME: Will set the time a call must be recognized before the phase selector activates the corresponding output. It will be settable from zero to 255 seconds in one-second increments. Its factory default must be zero seconds.

8. The phase selector's default values shall be re-settable by the operator using an IBM PC-compatible computer, or manually using switches located on its front.

9. The phase selector will be capable of three levels of discrimination of data-encoded infrared signals, as follows:

a. Verification of the presence of the base infrared signal of either 14.03509Hz ± 0.01773Hz for Command priority, 9.63855Hz ± 0.00836Hz for Advantage priority or 11.25873Hz ±0.01141Hz for Probe frequency.

b. Validation of the infrared signal data-encoded pulses.

c. Determination of when the vehicle is within the prescribed range.

10. The phase selector's card edge connector will include primary infrared detector inputs and power outputs. Two additional detector inputs per channel will be provided on a front panel connector.

11. The phase selector will include one opto-isolated NPN output per channel that provides the following electrical signal to the appropriate pin on the card edge connector:

a. 6.25Hz ± 0.1Hz 50% on/duty square wave in response to an Advantage priority call.

b. A steady ON in response to a Command priority call.

12. The phase selector will accommodate three methods for setting intensity thresholds (emitter range) for high and low priority signals:

a. Using a data-encoded emitter with range-setting capability.

b. Using any encoded emitter by manipulating the front panel switches.

c. Inputting the range requirements via the communication port.

13. The phase selector will have a solid state POWER ON LED indicator that flashes to indicate unit diagnostic mode and illuminates steadily to indicate proper operation.

14. The phase selector will have internal diagnostics to test for proper operation. If a fault is detected, the phase selector will use the front panel LED indicators to display fault information.

15. The phase selector will have a Command (High) and Advantage (Low) solid state LED indicator for each channel to display active calls.

16. The phase selector will have a test switch for each channel to test proper operation of Command or Advantage priority.

17. The phase selector will properly identify a Command priority call with the presence of 10 Advantage priority data-encoded emitter signals being received simultaneously on the same channel.

18. The phase selector will have write-on pads to allow identification of the phase and channel.

19. The phase selector shall provide one isolated confirmation light control output per channel. These outputs are user configurable through software for a variety of confirmation light sequences.

20. The NEMA model of the phase selector shall have outputs for the control of NEMA controllers that lack internal preemption capability. This function shall be accomplished through the use of Manual Control Enable, Interval Advance, and Phase Omit options.

21. The phase selector shall have the capability of recording the presence of a vehicle transmitting at the specified Probe frequency. The phase selector shall at no time attempt to modify the intersection operation in response to the Probe frequency.

22. The phase selector shall have the capability of providing Advantage priority in a mode where the output to the controller is gated or controlled by timing relationships within the controller cycle.

23. The phase selector shall have the capability to assign a relative priority to a call request within Command or Advantage priority. This assignment is based on the received vehicle class.

24. The phase selector shall have the capability to discriminate between individual ID codes, and allow or deny a call output to the controller based on this information.

25. The phase selector shall have the capability to log call requests by unauthorized vehicles.

26. The phase selector shall have the ability to command an emitter to relay a received code to the next intersection.

27. The phase selector shall have the capability of functionally testing connected detector circuits and indicating via front panel LEDs non-functional detector circuits.

28. The phase selector shall incorporate a precision real time clock synchronized to the utility AC power line frequency.

29. An auxiliary interface panel shall be available to facilitate interconnections between the phase selector and traffic cabinet wiring.

E. Card Rack

1. The required card rack will provide simplified installation of a phase selector into controller cabinets that do not already have a suitable card rack.

2. The card rack will be factory wired to one connector, located behind the card slot, and a terminal block, located next to the phase selector slot, on the front of the card rack.

3. The card rack connector on the front, will provide for all connections to the traffic controller.

4. The card rack will provide labeled terminal blocks for connecting the primary infrared detectors to a phase selector.

F. Interface Card for Electromechanical Controllers

1. The required interface card for electromechanical controllers will provide electrical and logic interface between the phase selector and an electromechanical-type controller.

2. The inputs to the interface card for electromechanical controllers will be connected to the outputs of the phase selector.

3. The outputs of the interface card for electromechanical controllers will be connected to the Hand Control Switch or Police Panel where the dial motor and its self-generated solenoid advance pulses are disconnected from the cam/solenoid assembly and replaced by pulses generated by the action of the Hand Control Switch in the electromechanical-type controller.

4. The interface card for electromechanical controllers will decode the outputs of the phase selector(s) and advance the controller to the phase that is set for that channel by sensing the traffic controller signal indications.

5. The interface card for electromechanical controllers will have one input to disable the interface card.

6. The interface card for electromechanical controllers will include the following switches:

a. Channel 1 Green Time: 16-position rotary switch; Controls timing between advance pulses, in seconds, when in Phase 1 green.

b. Channel 2 Green Time: 16-position rotary switch; Controls timing between advance pulses, in seconds, when in Phase 2 green.

Channel 3 Green Time: 16-position rotary switch; Controls timing between advance pulses, in seconds, when in Phase 3 green.

c. Channel 4 Green Time: 16-position rotary switch; Controls timing between advance pulses, in seconds, when in Phase 4 green.

d. NON Green Time: 16-position rotary switch; Controls timing between advance pulses, in seconds, when no indications are green.

e. Power Switch.

G. Interface Software

1. The priority control interface software will be provided on 3.5”, 1.44MB diskettes to interface with the phase selector. It must run on most IBM-compatible computers equipped with at least 512KB RAM, Windows™ 95 and color VGA display capability.

2. The priority control interface software must accommodate:

a. Setting up and presenting user-determined system parameters.

b. Viewing and changing settings.

c. Viewing activity screens.

d. Displaying and/or downloading records of previous activity showing class, code, priority, direction, call duration, final greens at end of call, duration of final greens, time call ended in real time plus maximum signal intensity (vehicle location information). This information may be used to reconstruct the route taken by a priority (or probe) vehicle to track the vehicle.

3. The priority control interface software must accommodate operation via a mouse or via the keyboard, or in combination.

4. The priority control interface software must provide menu displays to enable:

a. Setting of valid vehicle ID and class codes.

b. Establishing signal intensity thresholds (detection ranges), modem initialization, intersection name and timing parameters.

c. Setting of desired green signal indications during priority control operation and upload and download capability to view.

d. Resetting and/or retrieving logged data and priority vehicle activity.

e. Addressing for each card in a multi-drop connected system.

f. Confirmation light configuration.

g. NEMA Control Parameters.

IV. RELIABILITY

A. All equipment supplied as part of the infrared priority control system intended for use in the controller cabinet will meet the following electrical and environmental specifications spelled out in the NEMA Standards Publication TS2 1992, Part 2:

1. Line voltage variations per NEMA TS2 1992, Paragraph 2.1.2.
2. Power source frequency per NEMA TS2 1992, Paragraph 2.1.3.
3. Power source noise transients per NEMA TS2 1992, Paragraph 2.1.6.1.
4. Temperature range per NEMA TS2 1992, Paragraph 2.1.5.1.
5. Humidity per NEMA TS2 1992, Paragraph 2.1.5.2.
6. Shock test per NEMA TS2 1992, Paragraph 3.13.9.
7. Vibration per NEMA TS2 1992, Paragraph 3.13.8.

B. Each piece of equipment supplied as part of the priority control system intended for use in or on priority vehicles will operate properly across the entire spectrum of combinations of environmental conditions (temperature range, relative humidity, vehicle battery voltage) per the individual component specifications.

V. QUALIFICATIONS

A. The manufacturer of the required infrared priority control system will verify the proven, safe operation of the system's infrared communication technology. Upon request, the manufacturer will produce a list of 20 user agencies having two years or more experience interfacing priority control equipment with electromechanical, solid state and programmable controller types.

B. The manufacturer will demonstrate the ability to finance ongoing technical support, written product warranties, and responsibility for product failure.

C. Upon request, the manufacturer will produce a copy of its last full year and four previous year's corporate financial statements.

D. The manufacturer will have an independent quality department that has complete authority to control product integrity and is answerable only to the senior officer of the organization.

VI. RESPONSIBILITIES

A. The manufacturer of the required infrared priority control system and/or the manufacturer's representative will provide responsive service before, during and after installation of the priority control system. The manufacturer and/or the manufacturer's representative, as consultants to the installer, will provide certified, trained technicians having traffic systems industry experience and operational knowledge of priority control systems.

B. The lowest fully responsive bidder will be required to supply working production components specified in this Specification within 14 calendar days from the bid opening date. Failure to do so will render the bid non-responsive.

C. Paragraph B. will not be required if, prior to the bid opening, the bidder demonstrated to the city that the equipment bid meets these specifications.

VII. SUBSTANTIATED WARRANTY

A. The manufacturer of the required infrared priority control system will warrant that, provided the priority control system has been properly installed, operated and maintained, component parts of a matched component system (see Section II) that prove to be defective in workmanship and/or material during the first five (5) years from the date of shipment from the manufacturer will be covered in a documented system-protection plan, plus provide an added five-year maintenance coverage for repair or replacement at a fixed deductible charge for a total of ten (10) years of product coverage.

The manufacturer must substantiate its financial ability to respond to warranty claims. The guarantee will be determined in reference to the manufacturer's business assets and financial experience over the preceding five-year period.

B. In addition, upon request, the manufacturer will provide documentation proving ability to financially support the ten (10) year provisions of the warranty/maintenance period. Documentation will include appropriate financial reports for the previous five business years.

C. The protection plan will warrant that component parts of a matched component system that are not subject to coverage limitations and prove to be defective in workmanship and/or material during the first five (5) years from the date of shipment from manufacturer will be repaired at no charge, and that extended coverage with a fixed repair deductible will be available for an additional five (5) years.

D. In total, the warranty/maintenance coverage must assure that system components will be available to allow system operation during the ten (10) year warranty/maintenance coverage.

E. A copy of the manufacturer's written warranty outlining the conditions stated above will be supplied with the bid. Coverage and coverage limitations are to be administered as detailed in the manufacturer's Warranty/Maintenance document.

VIII. CERTIFICATE OF INSURANCE

The manufacturer of the required infrared priority control system will provide a certificate of product liability insurance protection for $5,000,000 assuring the priority control user that the manufacturer is insured against civil damages if proven to be at fault for an accident due to equipment failure within the system of matched priority control components. This certificate, however, need not, and is not meant to, provide liability insurance protection to the priority control system dealer, installer or user.

IX. USER SUPPORT SERVICES

The manufacturer of the required infrared priority control system will offer support programs to assist the purchase and implementation of a priority control system program, including:

A. A preferred lease program to finance purchase of a system.
B. Public relations assistance to promote the system within the user community.
C. Intersection survey service to document appropriate equipment interfaces.
D. Customized proposals to assist the procurement process.

E. Driver Training Program

X. CERTIFICATION

The manufacturer of the required infrared priority control system will certify that all component products are designed, manufactured and tested as a system of matched components and will meet or exceed the requirements of this specification.

GROUP 9
Section 1

Non-invasive, Magneto-inductive Vehicle Sensor

I. SCOPE

This specification describes the minimum design, operational, functional and installation requirements for a non-invasive, magneto-inductive vehicle sensor.

II. GENERAL DESCRIPTION

The non-invasive, magneto-inductive vehicle sensor is the sensing component of a vehicle detection system. The primary objective is to create a vehicle sensor for collecting traffic data and measuring traffic flow parameters that can be installed without sawcutting the road surface, that has reduced maintenance requirements and that can be serviced without closing traffic lanes.

The non-invasive, magneto-inductive vehicle sensor can be inserted easily into three inch (3”) diameter plastic conduit previously placed 18 to 23 inches (45.72 to 60.96 cm) below the road surface using trenchless directional drilling or open trenching techniques. Installing the sensors in a conduit leaves the road surface intact, bypasses the effects of poor pavement conditions and virtually eliminates the maintenance and service requirements normally associated with conventional loops.

Magneto-inductive vehicle sensors are transducers that convert changes in the vertical component of the earth’s magnetic fields to changes in inductance. Vehicles containing vertical sections of ferromagnetic material “focus” the earth’s field, and thus increase the magnetic field at the sensor when the vehicle moves over the sensor. When connected to an inductive loop detector with compatible operating specifications, vehicle passage is sensed by looking for an increase in the frequency that results from the decrease in the sensor inductance.

III. VEHICLE DATA COLLECTION REQUIREMENTS

-appropriately-designed, matched inductive loop vehicle detector to detect all licensable vehicles that contain ferromagnetic material. The sensor will detect these vehicles when they are within a travel distance less than one half (½) the height of the ferromagnetic material of the vehicle.

B. The single, double, triple or quadruple non-invasive vehicle sensing assemblies shall consist of either one, two, three or four sensors connected in series to a common lead-in wire.

C. Each single, double, triple or quadruple non-invasive, magneto-inductive vehicle sensing assembly shall be connected to an appropriately-designed, matched inductive loop vehicle detector.

D. Traffic data collection or traffic flow parameter measurements across diverse roadway geometry shall be optimized by either installing single, double, triple or quadruple non-invasive sensors.

IV. ELECTRICAL AND MAGNETIC OPERATING REQUIREMENTS

A. The non-invasive sensor shall transduce changes in the ambient magnetic field to changes in its inductance.

B. An increase in the ambient magnetic field shall result in a decrease in the inductance of the non-invasive sensor.

C. The nominal magnitude of the vertical magnetic field over which the non-invasive sensor shall function to specified requirements shall be 200 millioerstads to 800 millioerstads.

D. The non-invasive sensor shall detect reliably and consistently changes in the ambient magnetic field of seven (7) millioerstad or greater when the earth's magnetic field is ≥200 millioersted [H_{DC} =200 mOe] and the peak-to-peak amplitude of the applied inductive current is 40 $mAmp_{p-p}$ [I_{AC} =40 $mAmp_{p-p}$]. This requirement defines the sensitivity to be ≥2 nanohenries/millioerstad at H_{DC} =200 mOe and I_{AC} = 40 mAmp-p.

E. The inductance change of the non-invasive sensor shall be directly proportional the changes in the earth's magnetic field.

F. The probe inductance shall be between 50μH to 80μH.

G. The nominal operating frequency of the non-invasive sensor shall be between 20 kHz and 60 kHz.

H. The non-invasive sensor shall operate with drive currents of 2.5 $mAmp_{p-p}$ to 175 $mAmp_{p-p}$.

I. The specified electrical and operating requirements shall be maintained over temperatures ranging from -29.9°F to 162.5°F (-34°C to 74°C).

V. PHYSICAL REQUIREMENTS

A. The non-invasive sensor shall have an outer diameter of 0.8125 inches (2.06375 cm) and a height of 2.25 inches (5.72 cm).

B. The non-invasive sensor shall snap into a carrier.

C. The carrier shall hold and maintain the sensor position to ±20° of vertical.

D. The non-invasive sensor shall be suitably sealed for use in 100% humidity environments in the conduit.

VI. CONDUIT INSTALLATION REQUIREMENTS

A. The conduit shall be a three inch (7.62 cm) conduit consisting of Schedule 80 PVC or seamless polyethylene with an inner diameter of 2.9 inches (7.36 cm) and outer diameter of 3.5 inches (8.89 cm).

B. The conduit shall be installed at a nominal centerline depth of 21 inches (53.34 cm) from the road surface following crownline.

C. The depth of the centerline from the road surface shall be maintained between 18 and 24 inches (45.72 and 53.34 cm) over its entire length.

D. The centerline of the conduit shall not deviate horizontally more than required by the application.

E. Any deviation in conduit alignment shall be less than 0.25 inches (0.635 cm) per foot.

F. At least one end of the conduit shall terminate at a standard size handhole with a nominal 24 inch (53.34 cm) diameter and extend three inches (7.62 cm) into the handhole.

G. The end of the conduit at the handhole shall have grade to permit drainage.

VII. CARRIER PHYSICAL AND INSTALLATION REQUIREMENTS

A. The carrier mechanism for holding and inserting the non-invasive sensor (carrier) shall allow for placement of either single, double, triple or quadruple non-invasive, magneto-inductive vehicle sensors in the three inch (7.62 cm) diameter conduit meeting the installation requirements.

B. The carrier shall allow probes to be placed at six inch (15.24 cm) spacing increments.

C. The carrier shall allow for horizontal placement of the non-invasive sensors to be within three inches (7.62 cm) with respect to the specified location referenced at the road surface.

D. The carrier and the non-invasive sensor components shall be readily assembled on-site without special tools.

E. The carrier shall hold up to twelve (12) lead-in cables including the pull rope.

F. The carrier and interlinking mechanism shall have sufficient strength to allow insertion of up to twelve (12) probe sets into a 100 foot (30.48 meters) long conduit meeting the installation requirements.

G. The carrier system shall have a locking mechanism to maintain the orientation of all non-invasive sensors within ±20° of vertical.

H. The first carrier (end cap carrier) shall have a rope attached of sufficient strength to assist in the removal of the carriers from the conduit.

VIII.REQUIREMENT OF VERIFICATION OF PROPER INSTALLATION

A. The conduit installer shall provide a log of the boring depth measured every two feet (.60 meters) in boring distance.

B. The installer of the non-invasive sensor, home-run cable and detector shall verify that the installation meets requirements by measuring the inductance of the non-invasive sensor assembly with a properly designed, matched vehicle detector.

C. The inductance shall be the sum of probe inductance, inductance of lead-in cable (16.5 μH per 100 feet [30.48 meters]) and home-run cable (23 μH per 100 feet [30.48 meters]) and shall be within ± 20 percent of the calculated inductance.

D. The installer of the non-invasive sensor, home-run cable and detector shall verify that the installation meets requirements by measuring the DC resistance of the non-invasive sensor assembly with a properly calibrated ohm meter.

E. The measured DC resistance shall be the sum of 1.5 ohms per probe, 3.0 ohms per 100 feet (30.48 meters) of lead in wire and 2.0 ohms per 100 feet (30.48 meters) of home-run cable and shall be within ± 20% of the calculated DC resistance.

F. The installer of the non-invasive sensor assembly, home-run cable and detector shall measure the change in inductance of the installed non-invasive sensor assembly using a properly designed, matched vehicle detector when a standard, midsize vehicle is driven directly over the sensor.

G. The measured change in inductance for a standard midsize vehicle shall be in the range from 120nH to 1200nH.

H. The installer of the Non-invasive Microloop assembly, home-run cable and detector shall provide a log of the measured inductance, DC resistance and the change in inductance for each installed non-invasive sensor assembly.

Group 10

Section 1

Pullbox Enclosures

Description: provide an enclosure that is used to protect critical underground wiring for traffic signal equipment that can withstand vehicle loads that meet the following requirements at a minimum:

A. The pullbox shall be UL listed.
B. The pullbox shall be constructed of concrete polymer and reinforced with fiberglass mesh .
C. The pullbox shall have internal drain holes in the bolt area so that water can drain from bolt holes.

D. The pullbox shall weight at a minimum 14.1kg without the lid.
E. The pullbox shall be able to support at a minimum 20,000 – 22,000lb load test without the lid.
F. The pullbox shall have an inside measurement of no less than 12” x 12” from edge to edge.
G. The pullbox shall have an external measurement of no less than 14 ¾” x 14 ¾” from top lip edge to edge.
H. The pullbox shall have a minimum wall thickness of ½” inch.
I. The pullbox shall have a .5 flared wall at the bottom of the box measuring 1in in thickness.
J. The pullbox shall have an open bottom.
K. The pullbox shall be a stackable configuration so that multiple boxes can be secured together and are self aligning.

EXAMPLE: type 1 Quazite or County approved equivalent. This specification mentions “TYPE !” only as an example. Box sizes I.E. “type 1,2,3,4,5,6,7” must be followed per signal plans.

GROUP 11

Section 1

Pullbox Enclosure Lids/Covers

Description: : provide an enclosure cover that is used to protect critical underground wiring for traffic signal equipment that can withstand vehicle loads that meet the following requirements at a minimum:

A. The pullbox cover/lid shall be UL listed.
B. The pullbox cover/lid shall be constructed of concrete polymer and reinforced with fiberglass mesh
C. The pullbox cover/lid shall be tier 15 approved and able to support 20,000 – 22,000lbs.
D. The pullbox cover/lid shall be classified as Heavy Duty w/2 stainless steel bolts and washers to secure the lid to the box.
E. The pullbox cover/lid shall have a weight of no less than 5.4 kg.
F. The pullbox cover/lid shall have the wording “Traffic Signal” imprinted in the lid.
G.The pullbox cover/lid shall have a minimum thickness of ¾”
H. The pullbox cover/lid shall have a .5 COF skid resistant surface.
I. The pullbox cover/lid shall have a lid measuring 12 7/8” x 12 7/8” square.

J. The pullbox cover/lid shall have a ½" (13) x 2 ½" (64) pull slot.

EXAMPLE: type 1 Quazite or County approved equivalent

This specification mentions "TYPE !" only as an example. Box sizes I.E. "type 1,2,3,4,5,6,7" must be followed per signal plansEnclosures, boxes and covers are required to conform to all test provisions of the most current ANSI/SCTE 77 **"Specification For Underground Enclosure Integrity"** for Tier 15 applications. When multiple "Tiers" are specified the boxes must physically accommodate and structurally support compatible covers while possessing the highest Tier rating. All covers are required to have the Tier level rating embossed on the surface. In no assembly can the cover design load exceed the design load of the box. All components in an assembly (box & cover) are manufactured using matched surface tooling. Independent third party verification or test reports stamped by a registered Professional Engineer certifying that all test provisions of this specification have been met are required with each submittal.

Group 11

Traffic Signal Cabinet Base

PRECAST TRAFFIC SIGNAL BASE SPECIFICATION

1.0 GENERAL REQUIREMENTS

1.1 This specification outlines the requirements of the Quazite PB40441323A24 precast traffic signal base, as manufactured by Hubbell.

1.2 Where dimensions are given in this specification without specific tolerances, or where no dimensions are given, the tolerances and dimensions permitted by good shop practices shall be considered acceptable. The minimum acceptable top dimensions are 40 inches by 44 inches with a depth of 24 inches. The throat sizes shall be 6 inches by 32 inches, and 13 inches by 23 inches.

1.3 The traffic signal base shall be manufactured with the use of male/female molds to ensure a consistent wall thickness and structural strength.

2.0 PRODUCT TECHNICAL REQUIREMENTS

2.1 The precast traffic signal base shall be designed for a minimum static vertical load of 5,000 pounds and shall be tested to a static load of 7,500 pounds (1.5 safety

factor). The test load shall be distributed over a 10 inch by 10 inch by 1-inch thick distribution plate.

2.2 The precast traffic signal base shall be designed to withstand a lateral load of 1800 pounds and shall be tested to a lateral load of 2700 pounds 1.5 safety factor). The test load shall be distributed over an 18 inch x 24 inch x 1-inch steel plate applied to the longest side.

2.3 Any point on the top surface of the precast traffic signal base shall withstand a 50 foot-pound impact administered with a 12-pound weight having a "C" tup without puncture or splitting. This test shall be in accordance with ASTM D2444.

2.4 The inserts shall be of stainless steel and be capable of withstanding a minimum torque of 15 foot-pounds.

2.5 The precast traffic signal base shall be designed to be installed at grade level or to a maximum of 12 inches above grade level. A minimum area of 38 inches x 42 inches must be available inside the base for bending of any extra cable.

2.6 The precast traffic signal base shall be designed to withstand winds in accordance with current AASHTO wind mapping for the State of Georgia.

2.7 The precast traffic signal base shall be capable of withstanding normal shipping and installation practices without chipping, cracking, or structural damage.

2.8 The precast traffic signal base shall be designed to be nestable for ease of storage and shall be concrete gray in color.

2.9 A certified copy of all test reports must be signed and stamped by a registered Professional engineer and submitted prior to shipment of products.

3.0 MATERIALS TECHNICAL REQUIREMENTS

3.1 Tests of materials used in the manufacture of the traffic signal base shall be performed on specimens taken from product samples.

3.2 The material shall be tested according to the requirements of ASTM D543, Section 7, Procedure 1, for chemical resistance.

3.3 The traffic signal base shall be manufactured of a polymer concrete composite consisting of sand and aggregate bound together with a polymer resin, and have a compressive strength of 11,000 psi. Polymer concrete containing chopped fiber and fiber reinforced plastic shall not be acceptable. **Example Quazite: PB40441323A24**